INSTRUMENT LOOP DRAWINGS

1. GENERAL

1.1 Description

.1 The instrument loop drawings show typical instrument loop and wiring diagrams. The Contractor must review each wiring detail together with the reviewed Shop Drawings for the respective equipment and modify the drawing to comply with the selected equipment's requirements. Record all modifications, terminal numbers, wire numbers, etc. to as-constructed status and include copies of each drawing in the as-constructed drawing set.

.2 Red lines of field wiring will be provided within two (2) weeks after a switchover. Produce as-built drawings to the City's Drawing Standards and submit for review and approval prior to completion of a Migration Stage for the area.

.3 Using other drafting software and converting to AutoCAD will not be acceptable. The Contract Administrator will provide the typical CAD drawing files for the Contractor to use.

2. PRODUCTS (NOT USED)

3. EXECUTION

3.1 Shop Drawings

.1 Produce shop drawings for each instrument and panel in AutoCAD. Combine loops of similar instruments on a common drawing. All loops connected to the PCS shall be covered in the shop drawing instrument loop diagram set.

.1 All drawings shall follow the City's Water and Waste Drawing Standards.

.2 All drawings shall adhere to the requirements in the City's Automation Design Guide.

.1 Requirements of the Automation Design Guide shall be adhered to by the Integrator even where such requirements are not shown on the provided typical ILDs due to the as-installed circumstance.

.3 All CAD drawings will be provided to the City in the native format.

.2 All conductors are to be labelled on the shop drawing set with unique tags following and as defined by the City's Identification Standard.

.3 The Contractor shall prepare a drawing list for all new drawings to be created. The drawing list shall include each title line along with drawing number. Submit drawing list to the Contract Administrator so that drawing numbers can be reserved for use.

.4 In addition to updating all place holders, integrator shall include context descriptions for each instrument. These descriptions will provide context for the control system and equipment the loop is associated with.

3.2 As-Constructed Drawings

.1 Produce as-constructed drawings for each instrument and panel in AutoCAD. Combine loops of similar instruments on a common as-constructed drawing. All loops connected to the PCS shall be covered in the as-constructed instrument loop diagram set.

.1 All drawings shall follow the City's Water and Waste Drawing Standards.

.2 All drawings shall adhere to the requirements in the City's Automation Design Guide.

.1 Requirements of the Automation Design Guide shall be adhered to by the Integrator even where such requirements are not shown on the provided typical ILDs due to the as-installed circumstance.

.3 All CAD drawings will be provided to the City in the native format.

.2 Combine loops of similar instruments on a common as-constructed drawing. All loops connected to the PCS shall be covered in the as-constructed instrument loop diagram set.

.3 All conductors are to be labelled on the shop drawing set with unique tags that match the field tag on the wire following and as defined by the City's Identification Standard. If there is a discrepancy between the field tag and the City's Identification Standard, notify the Contract Administrator.

.4 The Contractor shall update the drawing list for all new drawings to be created. The drawing list shall include each title line along with drawing number. Submit drawing list to the Contract Administrator so that drawing numbers can be reserved for use.

.5 As-constructed drawings shall be sealed by a Professional Engineer registered with Engineers Geoscientists Manitoba to practice Engineering in the Province of Manitoba.

3.3 Contract Closeout

.1 Provide in accordance with Section 01 77 00.

END OF SECTION

B SIZE - 279mm x 432mm

SIGNAL ARROW

DISCONNECT DEVICE

CIRCUIT BREAKER

DEVICE TERMINAL

I/O TERMINALS

REFERENCE ARROW

WIRE TAG
TERMINAL

NORMAL

GROUNDED

FUSED

DISCONNECT

BRACKET

JUMPER

TWISTED PAIRING

GROUND

WIRE FAN-OUT

WIRE FAN-OUT +

SHIELD

CONTACT

FORM C CONTACTS

RELAY COIL

TIME DELAY SWITCH

OVERLOAD RELAY

OVERLOAD CONTACT

HEATER

RESISTOR

PUSH BUTTON

SELECTOR SWITCH

LIMIT SWITCH

FLOAT SWITCH

PRESSURE SWITCH

THERMAL SWITCH

FLOW SWITCH

ALARMS

TRANSFORMER

TVSS

DC POWER SUPPLY

DISCRETE DEVICE

PROCESS TRANSMITTER

KEY INTERLOCK

CAPACITOR

DIODE

BATTERY

LIGHTNING ARRESTOR

INDICATING LIGHT

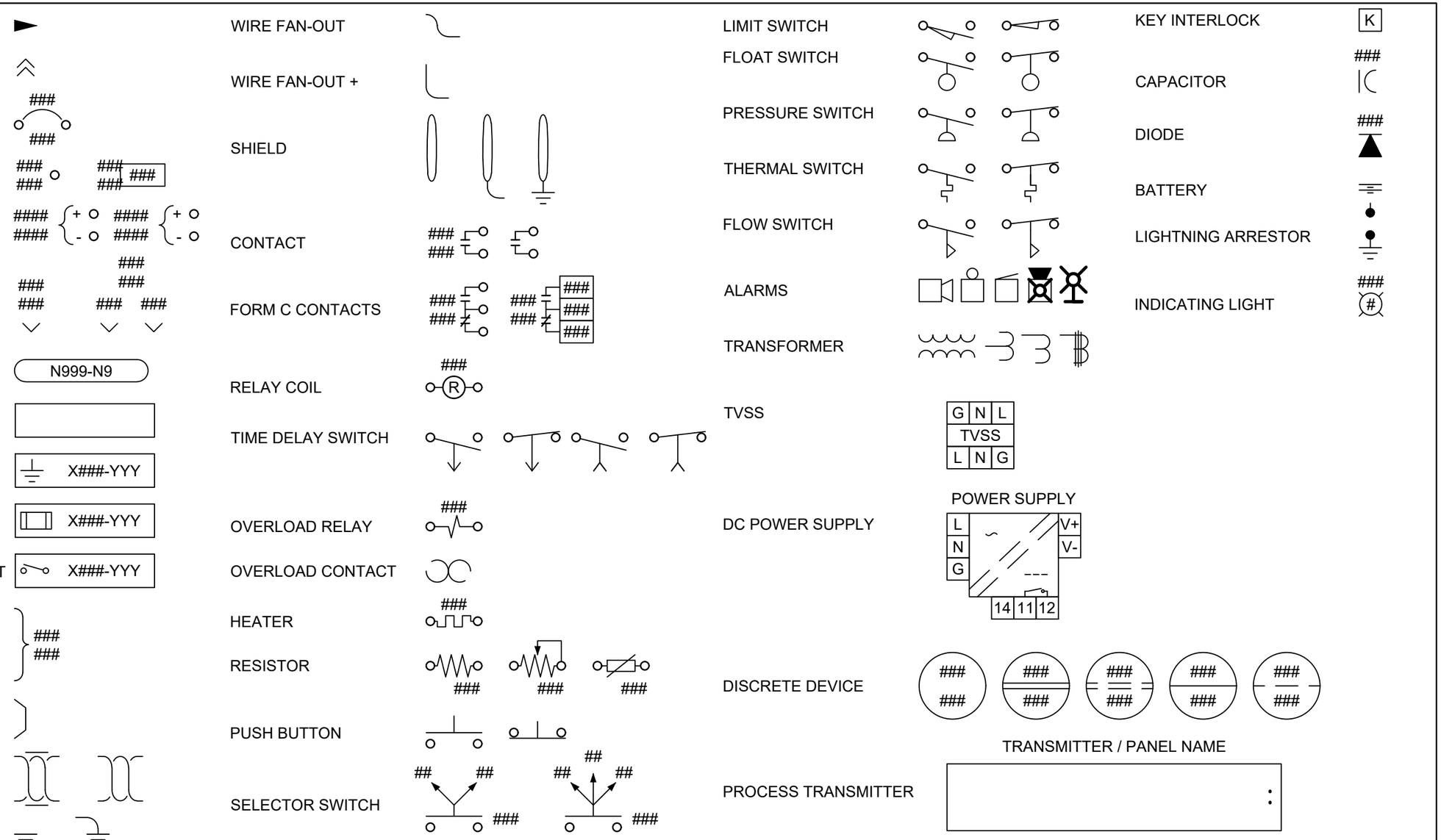

LAST SAVE: 2023/03/17 - 2:48pm
PATH: C:\Users\KATHER~1.GLE\AppData\Local\Temp\AcPublish_30872\COW_ILD.dwg

AECOM

NO.	REVISIONS	DATE	DESIGN	CHECK
0	ISSUED FOR TENDER	2023-03-17	KG	SDS

DESIGNED BY: KG	CHECKED BY: SDS
DRAWN BY: KG	APPROVED BY: SRB
SCALE: NTS	DATE: 2023-03-17
ISSUED FOR CONSTRUCTION BY:	DATE:
CONSULTANTNO.:	

ENGINEER'S SEAL

TYPICAL

NOT TO BE USED FOR CONSTRUCTION

Winnipeg

THE CITY OF WINNIPEG

WATER AND WASTE DEPARTMENT

NORTH END SEWAGE TREATMENT PLANT
DCS MIGRATION
LOOP DIAGRAM
LEGEND

CITY DRAWING NUMBER	SHEET	REV.	SIZE
1-0101-AILD-A001	001	0	B

B SIZE - 279mm x 432mm

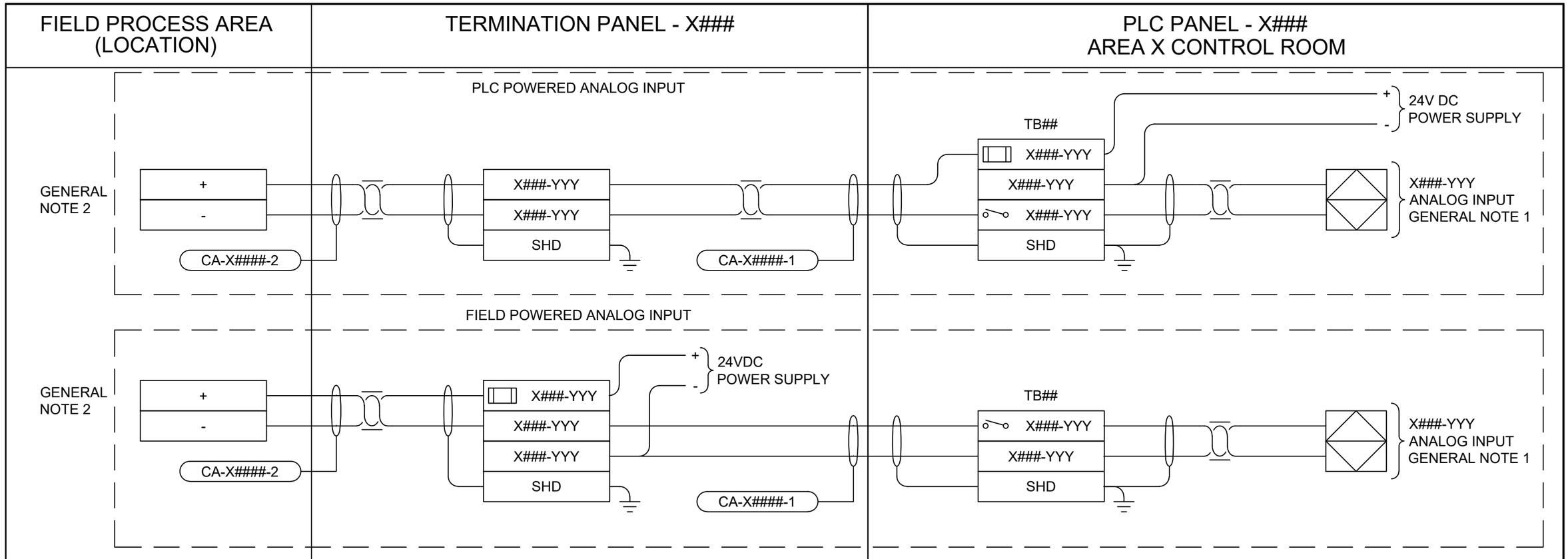

GENERAL NOTES:

1. SEE DRAWING XXX FOR PLC WIRING
2. SEE DRAWING XXX FOR FIELD WIRING

INTEGRATOR NOTES:

1. SEE SPECIFICATION 40 90 00 FOR SCOPE.
2. THIS DRAWING IS TYPICAL. INTEGRATOR SCOPE IS TO PRODUCE DETAILED LOOP DRAWINGS FOR EACH EQUIPMENT BASED ON CONTRACTORS REDLINES. COMBINE APPROPRIATE LOOP TYPES FOR EACH INSTRUMENT ON A SINGLE DRAWING AS INSTALLED, UPDATE WIRE, LOOP, TERMINAL, AND TAG NUMBERS. UPDATE AND ADD DRAWING REFERENCES IN GENERAL NOTES 1 AND 2
3. REFER TO CITY OF WINNIPEG IDENTIFICATION STANDARD FOR AUTOMATION INSTRUMENT, TERMINAL, CABLE AND WIRE TAGGING CONVETION

CONTRACTOR NOTES:

1. SEE SPECIFICATION 26 05 10 FOR SCOPE.
2. CONTRACTOR SCOPE IS TO COMPLETE FIELD WIRING DURING MIGRATION. COORDINATE WITH INTEGRATOR WHILE EXECUTING MIGRATION PLAN. CABLES TO BE INSTALLED AND TO BE TERMINATED AT FIELD DEVICE PANEL DURING SWITCH OVER OF LOOPS FROM DCS TO PCS. CONTRACTOR TO PROVIDE REDLINES FOR EACH DETAILED LOOP DRAWING TO INTEGRATOR TWO (2) WEEKS AFTER MIGRATION OF EACH AREA.

AECOM

NO.	REVISIONS	DATE	DESIGN	CHECK
0	ISSUED FOR TENDER	2023-03-17	KG	SDS

DESIGNED BY: KG	CHECKED BY: SDS
DRAWN BY: KG	APPROVED BY: SRB
SCALE: NTS	DATE: 2023-03-17
ISSUED FOR CONSTRUCTION BY:	DATE:
CONSULTANTNO.:	

ENGINEER'S SEAL

TYPICAL

NOT TO BE USED FOR CONSTRUCTION

Winnipeg

THE CITY OF WINNIPEG

WATER AND WASTE DEPARTMENT

NORTH END SEWAGE TREATMENT PLANT
DCS MIGRATION
LOOP DIAGRAM
TYPICAL ANALOG INPUTS

CITY DRAWING NUMBER	SHEET	REV.	SIZE
1-0101-AILD-A002	001	0	B

LAST SAVE: 2023/03/17 - 2:48pm
PATH: C:\Users\KATHER~1.GLE\AppData\Local\Temp\AcPublish_30872\COW_ILD.dwg

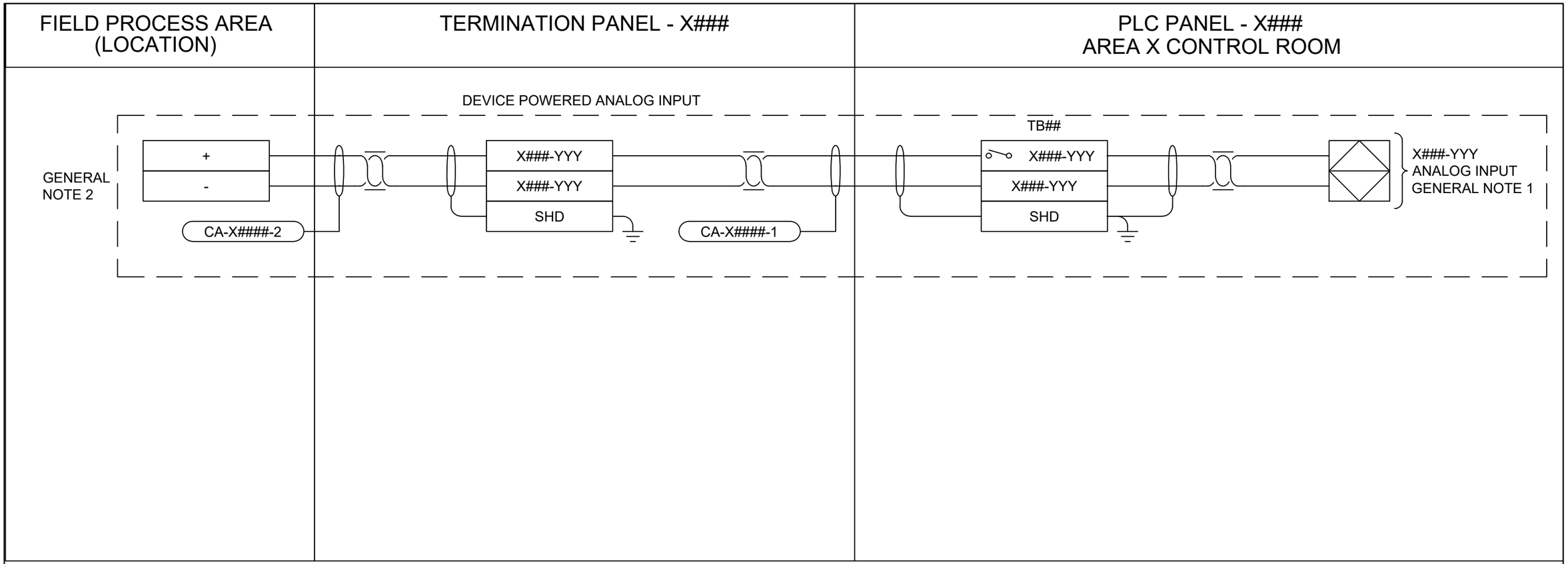

GENERAL NOTES:

1. SEE DRAWING XXX FOR PLC WIRING
2. SEE DRAWING XXX FOR FIELD WIRING

INTEGRATOR NOTES:

1. SEE SPECIFICATION 40 90 00 FOR SCOPE.
2. THIS DRAWING IS TYPICAL. INTEGRATOR SCOPE IS TO PRODUCE DETAILED LOOP DRAWINGS FOR EACH EQUIPMENT BASED ON CONTRACTORS REDLINES. COMBINE APPROPRIATE LOOP TYPES FOR EACH INSTRUMENT ON A SINGLE DRAWING AS INSTALLED, UPDATE WIRE, LOOP, TERMINAL, AND TAG NUMBERS. UPDATE AND ADD DRAWING REFERENCES IN GENERAL NOTES 1 AND 2
3. REFER TO CITY OF WINNIPEG IDENTIFICATION STANDARD FOR AUTOMATION INSTRUMENT, TERMINAL, CABLE AND WIRE TAGGING CONVETION

CONTRACTOR NOTES:

1. SEE SPECIFICATION 26 05 10 FOR SCOPE.
2. CONTRACTOR SCOPE IS TO COMPLETE FIELD WIRING DURING MIGRATION. COORDINATE WITH INTEGRATOR WHILE EXECUTING MIGRATION PLAN. CABLES TO BE INSTALLED AND TO BE TERMINATED AT FIELD DEVICE PANEL DURING SWITCH OVER OF LOOPS FROM DCS TO PCS. CONTRACTOR TO PROVIDE REDLINES FOR EACH DETAILED LOOP DRAWING TO INTEGRATOR TWO (2) WEEKS AFTER MIGRATION OF EACH AREA

AECOM

NO.	REVISIONS	DATE	DESIGN	CHECK
0	ISSUED FOR TENDER	2023-03-17	KG	SDS

DESIGNED BY: KG	CHECKED BY: SDS
DRAWN BY: KG	APPROVED BY: SRB
SCALE: NTS	DATE: 2023-03-17
ISSUED FOR CONSTRUCTION BY:	DATE:
CONSULTANT NO.:	

ENGINEER'S SEAL

TYPICAL

NOT TO BE USED FOR CONSTRUCTION

Winnipeg

THE CITY OF WINNIPEG

WATER AND WASTE DEPARTMENT

NORTH END SEWAGE TREATMENT PLANT
DCS MIGRATION
LOOP DIAGRAM
TYPICAL ANALOG INPUTS

CITY DRAWING NUMBER	SHEET	REV.	SIZE
1-0101-AILD-A002	002	0	B

B SIZE - 279mm x 432mm

LAST SAVE: 2023/03/17 - 2:49pm
PATH: C:\Users\KATHER~1.GLE\AppData\Local\Temp\AcPublish_30872\COW_ILD.dwg

B SIZE - 279mm x 432mm

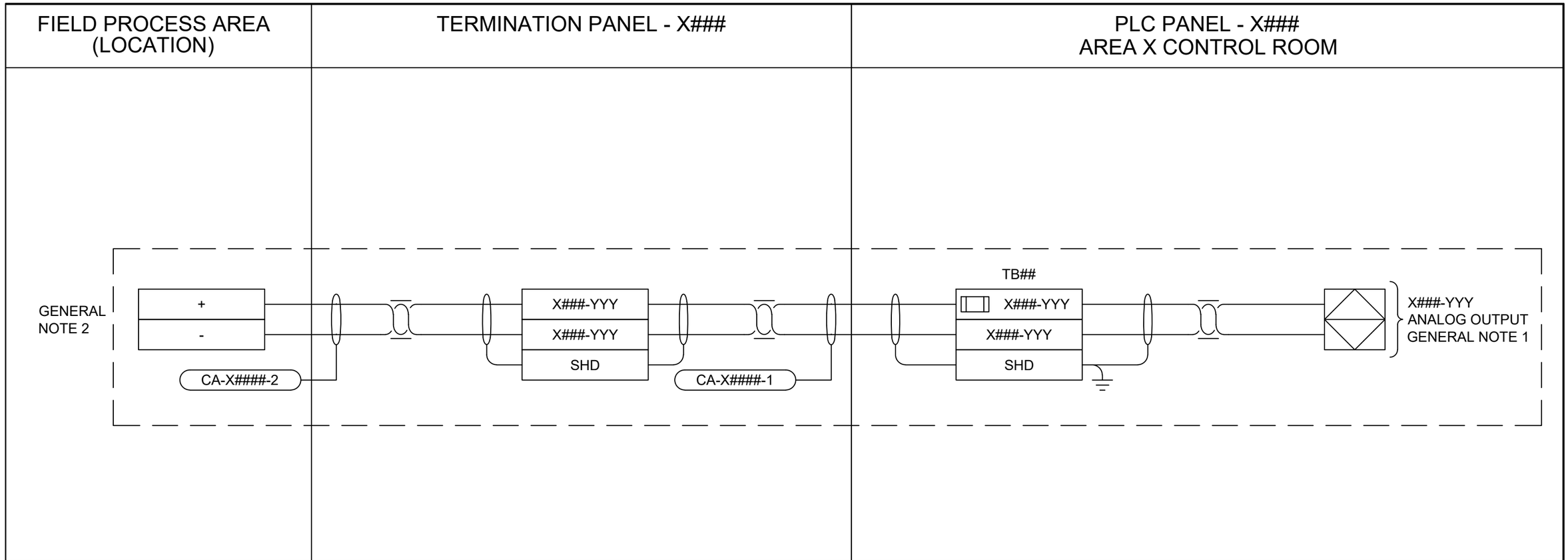

GENERAL NOTES:

1. SEE DRAWING XXX FOR PLC WIRING
2. SEE DRAWING XXX FOR FIELD WIRING

INTEGRATOR NOTES:

1. SEE SPECIFICATION 40 90 00 FOR SCOPE.
2. THIS DRAWING IS TYPICAL. INTEGRATOR SCOPE IS TO PRODUCE DETAILED LOOP DRAWINGS FOR EACH EQUIPMENT BASED ON CONTRACTORS REDLINES. COMBINE APPROPRIATE LOOP TYPES FOR EACH INSTRUMENT ON A SINGLE DRAWING AS INSTALLED, UPDATE WIRE, LOOP, TERMINAL, AND TAG NUMBERS. UPDATE AND ADD DRAWING REFERENCES IN GENERAL NOTES 1 AND 2
3. REFER TO CITY OF WINNIPEG IDENTIFICATION STANDARD FOR AUTOMATION INSTRUMENT, TERMINAL, CABLE AND WIRE TAGGING CONVETION

CONTRACTOR NOTES:

1. SEE SPECIFICATION 26 05 10 FOR SCOPE.
2. CONTRACTOR SCOPE IS TO COMPLETE FIELD WIRING DURING MIGRATION. COORDINATE WITH INTEGRATOR WHILE EXECUTING MIGRATION PLAN. CABLES TO BE INSTALLED AND TO BE TERMINATED AT FIELD DEVICE PANEL DURING SWITCH OVER OF LOOPS FROM DCS TO PCS. CONTRACTOR TO PROVIDE REDLINES FOR EACH DETAILED LOOP DRAWING TO INTEGRATOR TWO (2) WEEKS AFTER MIGRATION OF EACH AREA.

AECOM

NO.	REVISIONS	DATE	DESIGN	CHECK
0	ISSUED FOR TENDER	2023-03-17	KG	SDS

DESIGNED BY: KG	CHECKED BY: SDS
DRAWN BY: KG	APPROVED BY: SRB
SCALE: NTS	DATE: 2023-03-17
ISSUED FOR CONSTRUCTION BY:	DATE:
CONSULTANTNO.:	

ENGINEER'S SEAL

TYPICAL

NOT TO BE USED FOR CONSTRUCTION

Winnipeg

THE CITY OF WINNIPEG

WATER AND WASTE DEPARTMENT

NORTH END SEWAGE TREATMENT PLANT
DCS MIGRATION
LOOP DIAGRAM
TYPICAL ANALOG OUTPUTS

CITY DRAWING NUMBER	SHEET	REV.	SIZE
1-0101-AILD-A003	001	0	B

LAST SAVE: 2023/03/17 - 2:49pm
PATH: C:\Users\KATHER~1.GLE\AppData\Local\Temp\AcPublish_30872\COW_ILD.dwg

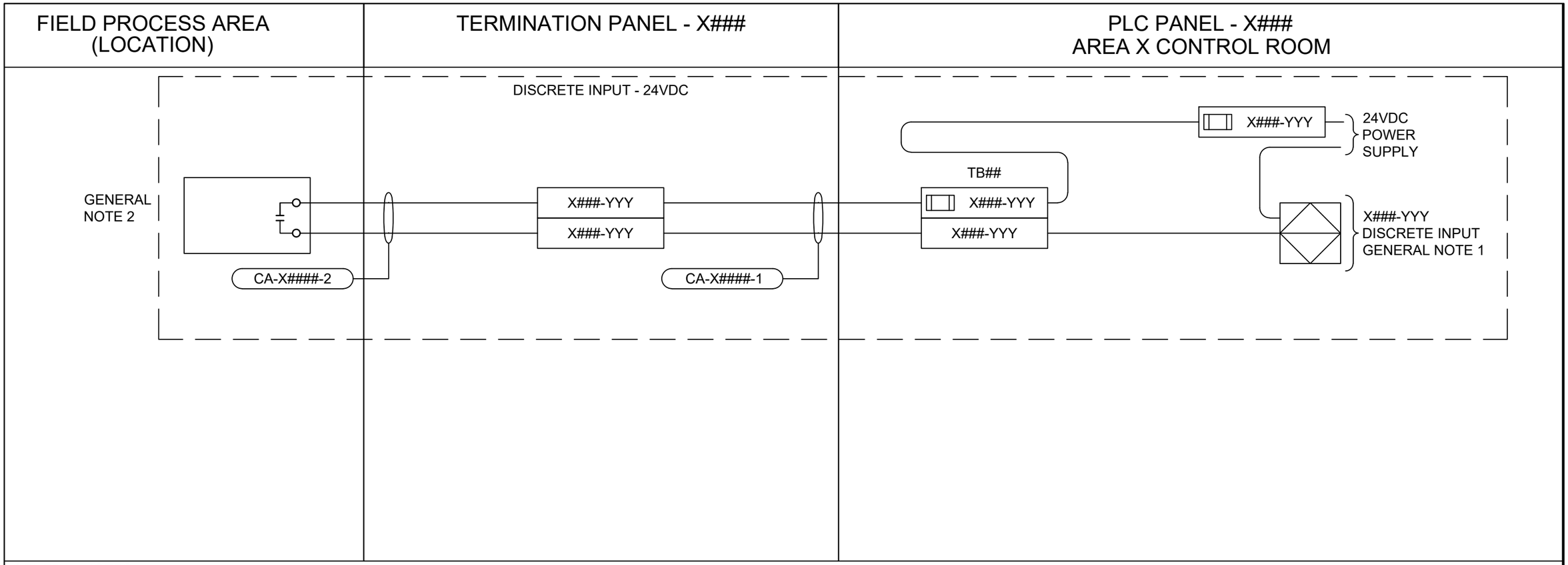

GENERAL NOTES:

1. SEE DRAWING XXX FOR PLC WIRING
2. SEE DRAWING XXX FOR FIELD WIRING

INTEGRATOR NOTES:

1. SEE SPECIFICATION 40 90 00 FOR SCOPE.
2. THIS DRAWING IS TYPICAL. INTEGRATOR SCOPE IS TO PRODUCE DETAILED LOOP DRAWINGS FOR EACH EQUIPMENT BASED ON CONTRACTORS REDLINES. COMBINE APPROPRIATE LOOP TYPES FOR EACH INSTRUMENT ON A SINGLE DRAWING AS INSTALLED, UPDATE WIRE, LOOP, TERMINAL, AND TAG NUMBERS. UPDATE AND ADD DRAWING REFERENCES IN GENERAL NOTES 1 AND 2
3. REFER TO CITY OF WINNIPEG IDENTIFICATION STANDARD FOR AUTOMATION INSTRUMENT, TERMINAL, CABLE AND WIRE TAGGING CONVETION

CONTRACTOR NOTES:

1. SEE SPECIFICATION 26 05 10 FOR SCOPE.
2. CONTRACTOR SCOPE IS TO COMPLETE FIELD WIRING DURING MIGRATION. COORDINATE WITH INTEGRATOR WHILE EXECUTING MIGRATION PLAN. CABLES TO BE INSTALLED AND TO BE TERMINATED AT FIELD DEVICE PANEL DURING SWITCH OVER OF LOOPS FROM DCS TO PCS. CONTRACTOR TO PROVIDE REDLINES FOR EACH DETAILED LOOP DRAWING TO INTEGRATOR TWO (2) WEEKS AFTER MIGRATION OF EACH AREA.

AECOM

NO.	REVISIONS	DATE	DESIGN	CHECK
0	ISSUED FOR TENDER	2023-03-17	KG	SDS

DESIGNED BY: KG	CHECKED BY: SDS
DRAWN BY: KG	APPROVED BY: SRB
SCALE: NTS	DATE: 2023-03-17
ISSUED FOR CONSTRUCTION BY:	DATE:
CONSULTANTNO.:	

ENGINEER'S SEAL

TYPICAL

NOT TO BE USED FOR CONSTRUCTION

Winnipeg

THE CITY OF WINNIPEG

WATER AND WASTE DEPARTMENT

NORTH END SEWAGE TREATMENT PLANT
DCS MIGRATION
LOOP DIAGRAM
TYPICAL DIGITAL INPUTS

CITY DRAWING NUMBER	SHEET	REV.	SIZE
1-0101-AILD-A004	001	0	B

B SIZE - 279mm x 432mm

LAST SAVE: 2023/03/17 - 2:49pm
PATH: C:\Users\KATHER~1.GLE\AppData\Local\Temp\AcPublish_30872\COW_ILD.dwg

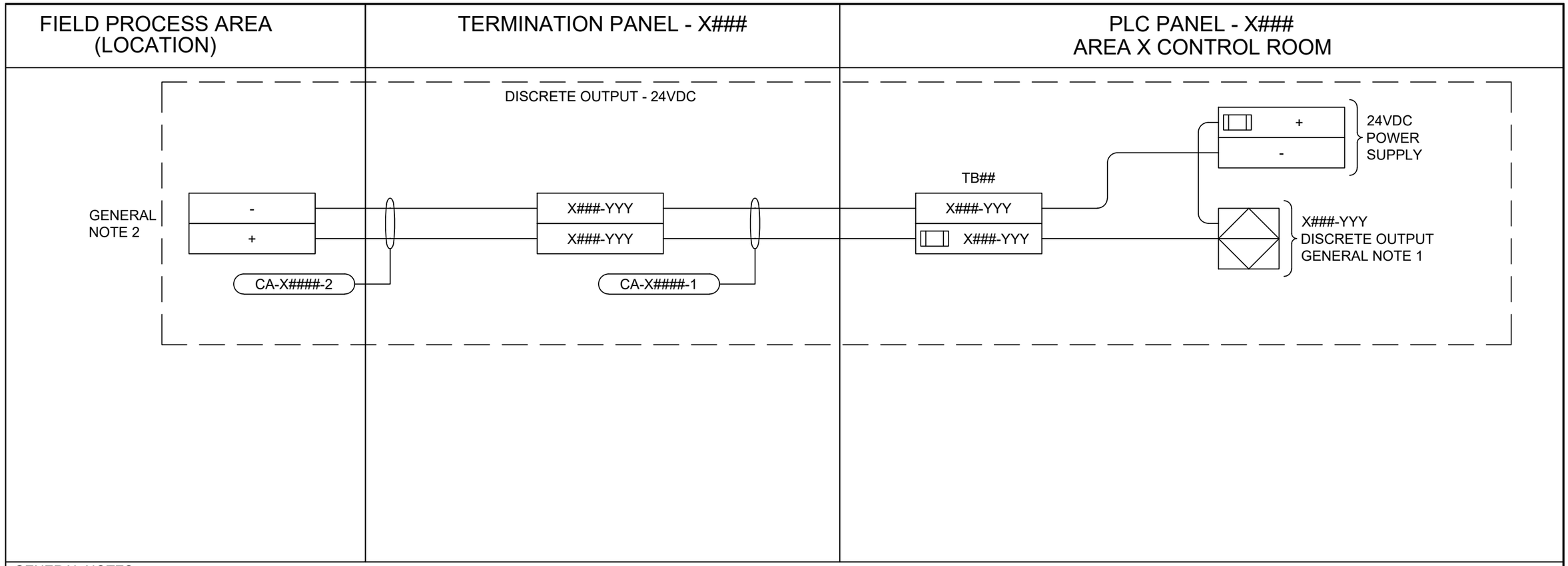

GENERAL NOTES:

1. SEE DRAWING XXX FOR PLC WIRING
2. SEE DRAWING XXX FOR FIELD WIRING

INTEGRATOR NOTES:

1. SEE SPECIFICATION 40 90 00 FOR SCOPE.
2. THIS DRAWING IS TYPICAL. INTEGRATOR SCOPE IS TO PRODUCE DETAILED LOOP DRAWINGS FOR EACH EQUIPMENT BASED ON CONTRACTORS REDLINES. COMBINE APPROPRIATE LOOP TYPES FOR EACH INSTRUMENT ON A SINGLE DRAWING AS INSTALLED, UPDATE WIRE, LOOP, TERMINAL, AND TAG NUMBERS. UPDATE AND ADD DRAWING REFERENCES IN GENERAL NOTES 1 AND 2
3. REFER TO CITY OF WINNIPEG IDENTIFICATION STANDARD FOR AUTOMATION INSTRUMENT, TERMINAL, CABLE AND WIRE TAGGING CONVETION

CONTRACTOR NOTES:

1. SEE SPECIFICATION 26 05 10 FOR SCOPE.
2. CONTRACTOR SCOPE IS TO COMPLETE FIELD WIRING DURING MIGRATION. COORDINATE WITH INTEGRATOR WHILE EXECUTING MIGRATION PLAN. CABLES TO BE INSTALLED AND TO BE TERMINATED AT FIELD DEVICE PANEL DURING SWITCH OVER OF LOOPS FROM DCS TO PCS. CONTRACTOR TO PROVIDE REDLINES FOR EACH DETAILED LOOP DRAWING TO INTEGRATOR TWO (2) WEEKS AFTER MIGRATION OF EACH AREA.

AECOM

NO.	REVISIONS	DATE	DESIGN	CHECK
0	ISSUED FOR TENDER	2023-03-17	KG	SDS

DESIGNED BY: KG	CHECKED BY: SDS
DRAWN BY: KG	APPROVED BY: SRB
SCALE: NTS	DATE: 2023-03-17
ISSUED FOR CONSTRUCTION BY:	DATE:
CONSULTANT NO.:	

ENGINEER'S SEAL

TYPICAL

NOT TO BE USED FOR CONSTRUCTION

Winnipeg

THE CITY OF WINNIPEG

WATER AND WASTE DEPARTMENT

NORTH END SEWAGE TREATMENT PLANT
DCS MIGRATION
LOOP DIAGRAM
TYPICAL DIGITAL OUTPUTS

CITY DRAWING NUMBER	SHEET	REV.	SIZE
1-0101-AILD-A005	001	0	B

B SIZE - 279mm x 432mm

LAST SAVE: 2023/03/17 - 2:49pm
PATH: C:\Users\KATHER~1.GLE\AppData\Local\Temp\AcPublish_30872\COW_ILD.dwg

IO LISTS

1. GENERAL

1.1 Description

.1 IO Lists for hardwired and networked IO to the DCS have been provided in Appendix C.

.2 Migrate all hardwired and networked IO from DCS to new PCS based PLCs. Migrate IO based on common control loops and equipment. Migrate IO in bunches that allow for the plant to remain operational to treat wastewater to the plant's licence requirements.

.3 Prepare IO lists to be migrated as part of each switchover plan.

.4 At the completion of an area migration, produce as-built IO lists for review. Update all columns of the IO list for the new installation. Update column reporting states, alarms, and scaling. Provide any notes for installations that are non-typical.

.1 As-built IO lists shall be inclusive of all hardwired and networked signals.

.2 As-built IO lists shall be based on the provided IO List templates in Appendix C and as described in the Automation Design Guide.

.3 As-built IO lists shall have all entries correctly filled out.

.5 Provide As-Built IO List in O&M Manuals.

2. PRODUCTS (NOT USED)

3. EXECUTION

3.1 Contract Closeout

.1 Provide in accordance with Section 01 77 00.

END OF SECTION

INTERFACE MAPS

1. GENERAL

1.1 Description

.1 Interface Maps templates for signals communicated between process areas have been provided in Appendix G, fill out and updates all cells in the template based on the PCS configuration.

.2 All monitoring and control loops based on signals between process areas must be maintained throughout the DCS Migration.

.1 Identify and submit a list of any signals associated with the interface map that are being migrated on the switchover plan for the Contract Administrator's review.

.2 Prepare, set up, and test any communication between the PCS and the DCS to maintain any signals across the process areas prior to the switchover of any associated IOs.

.3 Prepare, set up, and test any communication between the PLCs on the PCS and DCS to maintain any signals across the process areas prior to the switchover of any associated IOs.

.3 Update interface maps during each switchover that affects the interface map. Keep an up-to-date hard copy of the interface map in the site trailer. Use the interface map provided in Appendix G as a template. Provide additional columns or details as needed for the work.

.1 Provide read-only live access of the interface maps to the City.

.2 Submit the updated interface map at the end of the switchover period.

.4 At the completion of an area migration, produce as-built Interface maps for review. Update all columns for the new installation. Provide any notes for installations that are non-typical.

.5 Provide As-Built Interface Maps for each area in O&M Manuals.

2. PRODUCTS (NOT USED)

3. EXECUTION

3.1 Contract Closeout

.1 Provide in accordance with Section 01 77 00.

END OF SECTION

1. GENERAL

1.1 Description:

.1 This contract is to provide the integration services for the DCS Migration. Provide complete and operational systems for the Process Control System as shown in the specifications, drawings, and appendices. Refer to Appendix A, the DCS Migration Plan, for an overview and sequencing of the DCS Migration. The Work under this contract is described by the "Integrator" in Appendix A. Perform all work, testing, and commissioning as indicated and specified.

.2 Remote access to the PCS network is only allowed through City controlled VPNs. Coordinate with City for VPN access. No contractor controlled connections to any part of the PCS network shall be allowed.

.3 Servers:

.1 Three (3) servers have been pre-purchased by the City. Provide and install server cabinets, mounting racks, cabinet power distribution devices and cabling, and appurtenances as required for full functionality of the servers. Install servers in racks and configure each server as specified.

.2 The pre-purchased servers are Cisco UCSC-C240-M6S form factor.

.4 Network:

.1 A new Fibre Optic PCS Network has been installed at NEWPCC, provide new connections to the PCS Network for each PLC, RIO, Server, and PCS Operation Workstation. Configure network as required.

.2 Provide modifications to the new Fibre Optic PCS Network to change the network topology from a dual redundant ring to a single trunked ring operating with the Turbo Ring protocol.

.1 Modify the existing fibre optic terminations and provide and install fibre patch cables within each fibre network panel to switch the PCS control network from a parallel configuration to a single trunked series configuration as shown on the drawings.

.2 Set up the existing Moxa switches to operate in Turbo Ring V2 with trunked connections.

.3 Install and configure a temporary data link between the DCS and PCS, coordinate communication needs with the Contract Administrator.

.1 The City has set up a PLC on the PCS network which can communicate with the PCS. This PLC will facilitate all temporary communication between the PCS and the DCS. The City shall maintain ownership and control over this PLC.

.4 Provide and install DCS Infi90 communication ring bypass connectors.

.5 Operator Workstations:

.1 Provide, install, and configure new PCS Operator Workstations. Refer to spec section 40 95 34

.2 Provide KVMs in areas designated on the drawings for interim use by the City. Provide training for the KVMs.

.3 Provide training on new PCS Operator Workstations.

.6 Standardized PLC Function Blocks:

.1 Develop standardized PLC function blocks for the City's use. Use the standardized function blocks throughout the development of the PLC programs. Develop new standardized function blocks as required throughout the project.

.2 The standardized PLC function blocks shall be developed to be generic to facilitate multiple implementations throughout the plant for common wastewater associated equipment.

.1 The associated standardized block input and outputs shall be minimized and constrained to only those required for the specific equipment operation and feedback, and not the process as a whole.

.2 Where additional process information is required for the operation of the equipment, this more complex logic shall be developed at a higher logic level to generate the operating commands for the equipment. The equipment standardized function block shall then be connected to this logic through the function block inputs and outputs.

.3 Submit the standardized PLC function blocks at 33%, 66%, 99%, and 100% for the Contract Administrator's review.

.1 Submit the standardized PLC function blocks for the Contract Administrator's review and revise as directed. Demonstrate the standardized PLC function blocks as requested.

.2 Prior to each submittal, perform a walkthrough of the submittal and a full demonstration of the as-submitted package of the work completed.

.3 Provide sufficient documentation, software, and training in the review submittal to allow reviewers to understand the progress completed.

.4 Attend weekly one (1) hour development meetings with the Contract Administrator and City during the development of the standardized PLC Function Blocks.

.1 The intent of the development meetings are to monitor progress and provide feedback and guidance in an early and informal manner to address potential issues before they arise and prevent significant rework.

.2 Integrator(s) attending the meeting shall be involved in the direct development of the PLC Function Blocks and be familiar with the project and status.

.3 Walk the City through the progress developed in the previous week and demonstrate and/or simulate the functionality of the developed work.

.4 Review planned development work over the next two (2) weeks and ask questions as needed for upcoming development.

.5 The Contract Administrator will provide feedback on demonstrated function blocks to guide in the development of the standardized function blocks.

.7 Standardized HMI graphics:

.1 Develop standardized HMI Graphics (equipment graphics, interactive pop-up faceplates, user interfaces, alarm notifications, HMI layouts, and trend screens) for the City's use. Use the standardized graphics during development of the HMI screens. Develop new standardized HMI graphics as required throughout the project.

.1 Refer the City of Winnipeg's HMI Layout and Animation Plan for HMI Graphic requirements and style guidelines.

.2 Submit the standardized HMI graphics at 33%, 66%, 99%, and 100% for the Contract Administrator's review.

.1 Submit the standardized HMI graphics to the City for review and revise as directed. Demonstrate the HMI graphics and interactions as requested.

.2 Prior to each submittal, perform a walkthrough of the submittal and a full demonstration of the as-submitted package of the work completed.

.3 Provide sufficient documentation, software, and training in the review submittal to allow reviewers to understand the progress completed.

.4 Note that the HMI Faceplates shall be developed alongside the standardized function blocks to ensure the graphics and controls for the faceplates match the developed logic.

.3 Attend weekly one (1) hour development meetings with the Contract Administrator and City during the development of the standardized HMI graphics.

.1 The intent of the development meetings are to monitor progress and provide feedback and guidance in an early and informal manner to address potential issues before they arise and prevent significant rework.

.2 Integrator(s) attending the meeting shall be involved in the direct development of the HMI graphics and be familiar with the project and status.

.3 Walk the City through the progress developed in the previous week and demonstrate and/or simulate the functionality of the developed work.

.4 Review planned development work over the next two (2) weeks and ask questions as needed for upcoming development.

.5 The Contract Administrator will provide feedback on demonstrated HMI graphics to guide in the development of the standardized function HMI graphics.

.8 Provide integration services for the NEWPCC DCS Migration.

.1 Review all DCS logic sheets and PCNs (located in Appendix B) to understand each control loop. The DCS logic sheets will be provided upon request.

.1 The PCNs provided at time of tender are draft and subject to change prior to the integrator's development of each area. The PCNs have been provided to convey the scope and level of complexity of the work. The final PCNs will be issued during construction and will be a similar scope and level of complexity, however the control logic may be altered. No contract change, price change, schedule change, or change order will be issued for the release of the final PCNs without clear evidence of additional work being added.

.2 The provided PCNs to do not cover the HVAC and Building Mechanical control loops throughout the plant. These are part of the scope of the migration and will have to be fully included in the final PCS. The logic for the HVAC and Building Mechanical control loops will have to be developed by the Integrator from the DCS logic sheets directly.

.2 Design and fabricate all PLC and RIO panels. Refer to panel drawings, location plans, IO Lists (located in Appendix C), and typical loop drawings as required. Request any reference drawings from the City needed as required.

.1 Due to space limitations, the panels will not fit in the area control rooms until the existing controller cabinets are removed. In the interim the PLC panel backboards will be installed on temporary stands.

.2 Design panel backboards to be removable. Each panel board section will have a maximum width of 1 meter.

.3 Design and fabricate temporary stands for panel backboards. Install panel backboards on temporary stands for use during the migration. Provide temporary stands to City at the completion of the project. Provide protective shrouds at all times during the use of temporary stands to protect the temporary stand and PLC from accidental contact from the integrator, contractor, and plant staff.

.3 Develop new PLC logic for the new PLCs and RIOs to perform the requirements documented in the DCS logic and summarized in the Process Control Narratives. Configure all equipment as required. Simulate and verify any PLC logic functions if process signals can not be utilized.

.4 Perform a Factory Acceptance Test for each PLC and RIO panel witnessed by the Contract Administrator.

.5 Perform a System Integration Function Test for each PLC and associated HMIs.

.6 Perform a Site Acceptance Test for each PLC and RIO panel.

.7 Perform a Site Integration Test of all installed equipment.

.8 Perform Commissioning for all installed equipment and systems.

.9 Develop all detailed drawings for an area prior to any area switchovers occurring.

.9 Switchovers

.1 Provide switchover plans based on Appendix A, the DCS Migration Plan.

.2 Schedule and sequence switchovers to maintain NEWPCC functionality.

.3 Lead switchover activities. Coordinate and direct Others as required to complete switchovers.

.4 Perform testing and commissioning on all switched over logic as specified in section 40 99 92. Assist the City with testing to verify DCS functionality is not affected by switchover activities.

.5 Enable and disable logic in the PCS and coordinate with city for DCS as required to ensure a device may only be controlled by the system it is currently connected to. The City will modify any logic in the DCS to provide communication between the PCS and DCS to facilitate operation of the plant across both control systems.

.6 Within two (2) weeks of a switchover, others will provide the contractor with red lines of the detailed loop drawings. Produce as-builts of the loop drawings based upon red lines.

.7 Produce detailed as-builts and O&M Manuals following the City Water and Waste Department drawing standards of all Work in an area upon completion of the area migration. Work on subsequent stages will not be allowed until as-builts and O&M Manuals are produced for completed work.

.10 Provide salvaging services for the NEWPCC DCS Migration.

.1 Salvage and package in anti-static weatherproof packaging the DCS cards. The City will provide a list of cards to salvage. Deliver to the City at the provided location.

.11 The equipment enclosure classification of the plant areas are indicated on the drawings. Provide all equipment, devices and material meeting the requirements for these area classifications unless otherwise noted or specified.

.12 The Integrator shall maintain a site presence of at least one (1) person for a minimum of 8:00 AM to 4PM on Business Days during the setup of the servers, the switchover, commissioning and demonstration period of each area, the integration of existing PLCs, and the integration of the Headworks area.

.1 The Integrator shall provide additional personnel on site to as required to perform tasks within the scope and state of the Work.

.2 Only integrators qualified and approved to work on the project who are familiar with the scope and state of the Work shall count towards the above site presence requirements.

.3 The Integrator shall provide additional personnel on site as required to maintain the project terms and requirements.

.4 Remote access to the project network may be granted by the City IT Department to approved personnel. Remote work does not count towards the site presence requirements. Remote access must be requested by each individual and shared general access will not be granted. Schedule delays will not be granted for to delays in acquiring remote access.

.13 Produce O&Ms for the overall PCS and O&Ms for each process area. Include O&M data as specified, all included information is to be updated as installed and not generic.

.1 The Contractor providing the wiring and additional scope as shown in the migration plan and on the drawings will provide sections for each O&M. Allow for and include these sections in each O&M to provide a single comprehensive O&M.

1.2 General Requirements

.1 Refer to Division 1 for General Requirements related to the Contract Documents.

.2 Refer to all Sections of Division 26, 40, Drawings, and Appendices.

.1 The intent of the Specifications and Drawings is to include all labour, products, and services necessary for complete Work, tested and ready for operation.

.2 Symbols used to represent various electrical devices often occupy more space on the Drawing than the actual device does when installed. In such instances, do not scale locations of devices from electrical symbols. Install these devices with primary regard for usage of wall space, convenience of operation and grouping of devices. Refer to installation details where they exist.

.3 Responsibility to determine which Division provides various products and work rests with the Contractor. Additional compensation will not be considered because of differences in interpretation of the present specifications.

1.3 References

.1 Canadian Standards Association (CSA):

.1 CSA C22.1, Canadian Electrical Code, Part 1, Safety Standard for Electrical Installations, most current adopted edition.

.2 CSA-C22.3 No. 1-20, Overhead Systems.

.3 CSA C22.3 No.7-20, Underground Systems.

.4 CSA-C22.2 No. 232, Optical Fiber Cables.

.5 CSA CAN3-C235-83, Preferred Voltage Levels for AC Systems, 0 to 50,000 V.

.2 Institute of Electrical and Electronics Engineers (IEEE):

.1 IEEE SP1122 (2007), The Authoritative Dictionary of IEEE Standards Terms.

.3 National Electrical Manufacturers Association (NEMA):

.1 NEMA 250-2014, Enclosures for Electrical Equipment (1000 Volts Maximum).

.4 Manitoba Hydro:

.1 Manitoba Electrical Code, most current adopted revision.

.2 Manitoba Hydro Inspection Notices.

.5 City of Winnipeg:

.1 Automation Design Guide.

.2 Electrical Design Guide.

.3 HMI Layout and Animation Plan

.4 Identification Standard.

.5 Tag Naming Standard.

.6 Winnipeg Electrical By-Law.

.7 Information Bulletins.

1.4 Definitions

.1 Electrical and electronic terms: unless otherwise specified or indicated, terms used in these Specifications, and on Drawings, are those defined by IEEE SP1122

1.5 Quality Assurance

.1 Install electrical work in conformance with latest rules and requirements of the Canadian Electrical Code, the Manitoba Electrical Code, and the Winnipeg Electrical By-law.

1.6 Qualifications of Integrator

.1 The Integrator shall have been engaged in work of a similar nature to this contract for the past ten (10) years.

.2 The Integrator shall have a minimum of five projects of similar scope and size with the type of equipment specified under this project.

.1 Specific direct experience with Aveva Plant SCADA (Previously Citect SCADA) on large scale Process Control Systems is required.

.2 Specific direct experience with the Schneider M580 family of PLCs is required. Preference will be given to experience with Schneider M580 Hot-Standby experience.

.3 Specific direct experience with Citect/AVEVA Historian.

.4 Specific direct experience with industrial networking. Preference will be given to experience with Moxa's Turbo Ring protocol.

.3 Only Integrators shown on the RFP or have been approved by the Contract Administrator shall be allowed to work on this project.

.1 Resumes and references are to be provided to the Contract Administrator with requests for approval to work on the project. Two (2) weeks will be allowed for reference checks.

1.7 Submittals

.1 Submit the following:

.1 The following defines a minimum for all Division 40 Shop Drawing and data submittals:

.1 Submit Shop Drawings delineated by specification number with all information for one piece of equipment provided as one package.

.2 Partial submittals will be returned without action.

.3 Submit bills of material: Include a numbered list of all components, with manufacturer's name, catalog number, rating, and other identification. Place item number or similar identification on all other drawings where item appears.

.4 O&M and other final submission drawings for the City's records shall be drafted to the City's Water and Waste Departments drawing standards and follow the drawing templates when templates for the drawing type are available. Request from the Contract Administrator drawing templates for each drawing type produced.

.5 Submittal shall include:

.1 Submit wiring diagrams and installation details of equipment indicating proposed location, layout and arrangement, control panels, accessories, piping, ductwork, and other items that must be shown to ensure coordinated installation.

.2 Identify on wiring diagrams circuit terminals and indicate internal wiring for each item of equipment and interconnection between each item of equipment.

.3 Indicate on Drawings clearances for operation, maintenance, and replacement of operating equipment devices.

.4 If changes are required, notify Contract Administrator of these changes before they are made.

.5 Contract Administrator will not assume the responsibility for searching out deviations in the Contractor's drawings.

.6 Shop drawings shall be first checked by the Contractor for space, dimension, performance characteristics and general conformance to the Drawings and Specifications and shall be so stamped. Shop Drawings not stamped as specified will be returned to Contractor without action. Contractor's stamp shall include name and address of Contractor, the date checked, the initials of the checker and the status of the checking, including conclusive markups.

.7 Shop Drawings shall include manufacturer's name and address, equipment or material descriptive names, and catalog number. Shop Drawings shall indicate dimensions, voltage and current characteristics, wire sizes, test or conformance data, construction and rough-in data of all material to be used.

.6 Submit only completed drawings showing all local and remote devices associated with each item.

.7 Mark shop drawings and data submitted showing only items applicable to specific contract. Complete catalogues that have not been curated to the specific products submitted will be rejected.

.8 Where additions and modifications are made to existing equipment, provide drawings which include both retained existing equipment and new work.

.9 Submit time-current characteristic curves for all submitted protection devices such as circuit breakers and fuses.

.10 Submit other documentary or descriptive information as required for each assembly to demonstrate compliance with the applicable contract documents.

.2 Shop drawings and data are required for the following list:

.1 Cables & Accessories.

.2 Panel Power Distribution Wiring Diagrams

.3 Network Architecture Wiring Diagrams

.4 Detailed IO Module Wiring Diagrams

.5 Detailed Loop Wiring Diagrams

.6 Panel Location Planes

.7 Equipment Cabinets, Racks & Consoles.

.8 Terminal and Wire Marking System.

.9 Equipment Identification

.10 Field Acceptance Test Reports

.11 Record Drawings

.3 Submit instruction manuals for installation, operation, and maintenance of equipment, and parts list for equipment including but not limited to the items listed below. Specifically mark standard publications forming a part of this contract. Cross out, blank out, or otherwise delete non-applicable items. Submittals which do not clearly indicate items and features provided shall be rejected.

.1 Provide instruction for each system and individual equipment as specified in design drawings and technical specification sections for use by operation and maintenance personnel.

.2 Operating instructions to include following:

.1 Wiring diagrams, control diagrams, and control sequence for each equipment with process system.

.2 Service instructions: including a list of spare pars and replacement parts and the names and addresses of all suppliers.

.3 Maintenance instructions: including start-up, proper adjustment, operating, lubrication, and shutdown procedures.

.4 Installation instructions.

.5 Safety precautions.

.6 Operating instructions, including procedures to be followed in event of equipment failure.

.7 Other items of instruction as recommended by Manufacturer of each system or item of equipment.

.8 List of included spare items.

.3 Operations and maintenance manuals to include at least the following systems:

.1 Cables & Accessories.

.2 Panel Power Distribution Wiring Diagrams

.3 Network Architecture Wiring Diagrams

.4 Detailed IO Module Wiring Diagrams

.5 Detailed Loop Wiring Diagrams

.6 Panel Location Planes

.7 Equipment Cabinets, Racks & Consoles.

.8 Terminal and Wire Marking System.

.9 Equipment Identification

.10 Field Acceptance Test Reports

.11 Record Drawings

.4 Provide CSA certified equipment and material. Where CSA certified equipment and material is not available, submit such equipment and material inspection authorities for special acceptance approval before delivery to Site.

.5 Drawings of Record:

.1 One complete set of construction drawings shall be kept on site. Records during construction will be maintained.

.6 Submit test results of installed electrical systems and instrumentation.

.7 Permits and fees: in accordance with General Conditions of Contract.

.8 Submit copies of electrical permit when attained and when closed.

.9 Submit certificate of acceptance from Authority Having Jurisdiction upon completion of Work to Contract Administrator.

.10 Manufacturer's Field Reports: submit to Contract Administrator Manufacturer's written report, within three (3) days of review, verifying compliance of Work and electrical system and instrumentation testing, as described in Part 3.18 Field Quality Control.

1.8 Nameplates and Labeling

.1 Provide nameplates and labels as specified in Section 26 05 53.

1.9 Interference and Erroneous Locations

.1 Locations of electrical equipment, devices, outlets, and similar items, as indicated, are approximate only. Exact locations shall be determined during construction.

.2 Verify in field, all data and final locations of work installed under other sections of specifications, required for placing of electrical work.

.3 In case of interference with other work or erroneous locations with respect to equipment or structures, furnish all labor and materials to complete the work.

1.10 Delivery, Storage, and Handling

.1 Material Delivery Schedule: Provide Contract Administrator with schedule within two (2) weeks after award of Contract.

1.11 Waste Management and Disposal

.1 Separate waste materials for reuse and recycling.

.2 Collect and separate paper, plastic, polystyrene and corrugated cardboard packaging material for recycling.

.3 Divert unused metal and wiring materials from landfill to metal recycling facility as approved by Contract Administrator. Turn over any copper materials for the City to exercise its right of first claim. Disposal of materials not claimed by the City shall be the responsibility of the Contractor.

.4 Fold up metal banding, flatten and place in designated area for recycling.

.5 Remove from site and dispose of all packaging materials at appropriate recycling facilities.

.6 Place materials defined as hazardous or toxic waste in designated containers.

.7 Ensure emptied containers are sealed and stored safely for disposal away from children and wildlife.

.8 Unused sealant material must not be disposed of into sewer system, streams, lakes, onto ground or in other locations where it will pose health or environmental hazard.

.9 Do not dispose of preservative treated wood through incineration.

.10 Do not dispose of preservative treated wood with other materials destined for recycling or reuse.

.11 Dispose of treated wood, end pieces, wood scraps, and sawdust at a sanitary landfill approved by Contract Administrator.

1.12 Compliance

.1 Failure to comply with the drawings and specifications shall be cause for rejection and the Contractor shall be required to make good at no additional cost to the City or their agents.

2. PRODUCTS

2.1 Materials and Equipment

.1 Provide materials and equipment.

.2 Items covered under the scope of Appendix F, Standardized Goods, shall be procured under the Standardized Goods contract using the City's negotiated price and according to the terms of the Standardized Goods contract.

.3 All equipment shall be manufactured by experienced manufacturers who can demonstrate in-use records for all equipment offered.

.4 Requests for approval of alternative suppliers shall be submitted to the Contract Administrator prior to tender closing. To ensure the integrity and fairness of the tender process, unapproved alternates provided after award will be rejected.

.5 The majority of equipment shall be supplied by a single manufacturer, particularly where technical performance is of concern. Also, for equipment that requires uniformity of looks and aesthetics, such as in power and control panels, wiring devices and luminaires.

.6 Material and equipment to be CSA Certified. Where CSA Certified material and equipment are not available, inform the Contract Administrator and obtain special approval at no cost to the City from inspection authorities before delivery to site and submit such approval to the Contract Administrator. Include any special approvals in the Operating and Maintenance manuals.

.7 Factory assembled control panels and component assemblies.

.8 Clearly mark equipment, devices and material with name or trademark of manufacturer and rating in volts and amperes and other pertinent information on a nameplate.

2.2 Wiring Terminations

.1 Ensure lugs, terminals, screws used for termination of wiring are suitable for either copper or aluminum conductors.

.2 Use lip blade lug on wires within the control panels.

2.3 Equipment Identification

.1 Identify electrical equipment and devices with nameplates as follows:

.1 Nameplates: lamacoid 3 mm thick plastic engraving sheet, black face, white core, lettering accurately aligned and engraved into core mechanically attached with self-tapping screws.

.2 Sizes as follows:

NAMEPLATE SIZES

Size 1	10 x 50 mm	1 line	3 mm high letters
Size 2	12 x 70 mm	1 line	5 mm high letters
Size 3	12 x 70 mm	2 lines	3 mm high letters
Size 4	20 x 90 mm	1 line	8 mm high letters
Size 5	20 x 90 mm	2 lines	5 mm high letters
Size 6	25 x 100 mm	1 line	12 mm high letters
Size 7	25 x 100 mm	2 lines	6 mm high letters

.2 All essential power labelling to be red face nameplate with white letters.

.3 Labels: embossed plastic labels with 6 mm high letters unless specified otherwise.

.4 Wording on nameplates and labels to be approved by Contract Administrator prior to manufacture.

.5 Allow for minimum of twenty-five (25) letters per nameplate and label.

.6 Nameplates for terminal cabinets and junction boxes to indicate system and/or voltage characteristics.

.7 Disconnects, starters and contactors: indicate equipment being controlled and voltage.

.8 Terminal cabinets and pull boxes: indicate system and voltage.

.9 Transformers: indicate capacity, primary and secondary voltages.

.10 For all PLC and RIO panels, label circuit panel designations and where fed from.

2.4 Wiring Identification

.1 Identify wiring with permanent indelible identifying markings, either numbered or coloured plastic tapes, on both ends of phase conductors of feeders, branch circuit wiring and neutrals.

.1 Identify panel wiring using heat shrink ID tags on both ends of each wire.

.2 Wire tagging to follow the City of Winnipeg Identification Standard.

.2 Maintain phase sequence and colour coding throughout.

.3 Colour coding: to CSA C22.1.18.

.4 Use colour coded wires in communication cables, matched throughout system.

2.5 Conduit and Cable Identification

.1 Colour code conduits, boxes and metallic sheathed cables.

.2 Code with plastic tape or paint at points where conduit or cable enters wall, ceiling, or floor, and at 5 m intervals.

.3 Provide cable identification label at 3m intervals or less along all conduits. Provide labels within 1m of penetrations. Labels shall be on both sides of wall, ceiling, or floor penetrations.

.1 Cable identification to follow City of Winnipeg Identification Standard

.4 Colours: 38 mm wide prime colour and 19 mm wide auxiliary colour.

Item	Prime	Auxiliary
Medium Voltage (> 750 V)	Orange	
347/600 V	Yellow	
208/120/240 V Power	Black	
UPS 208/120/240 V Power	Black	Green
Control Wiring (120 V)	Black	Orange
Fire Alarm	Red	
Low Voltage Communication/General	Blue	
Low Voltage Control Wiring (< 50 V)	Blue	Orange
Intrinsically Safe	Blue	White
Grounding	Green	
Fibre Optic Cable	Purple	

2.6 Finishes

.1 Shop finish metal enclosure surfaces by application of rust resistant primer inside and outside, and at least two (2) coats of finish enamel.

.1 Paint outdoor electrical equipment light gray finish.

.2 Paint indoor enclosures light gray or black finish.

3. EXECUTION

3.1 Installation

.1 The complete installation shall be carried out in accordance with the latest CSA C22.1.18 - Canadian Electrical Code, except where specified otherwise.

.2 Do overhead and underground systems in accordance with CSA C22.3 No.1 except where specified otherwise.

.3 All work shall be executed in accordance with the latest current codes, standards, statutes or recommendations of the following technical societies, trade organizations, and governing agencies, and shall be subject to the inspection of those departments having jurisdiction.

.4 Install all equipment in accordance with the manufacturer's recommendations and in a manner that will ensure satisfactory operation upon completion.

.5 Provide all labour and all necessary equipment including lifts, scaffolding, tools and rigging materials for installation of the equipment.

.6 The Contractor shall be responsible for coordinating all other works, including coordinating with City operations, for the equipment being installed.

3.2 Removal and Relocation of Material and Equipment

.1 Equipment shall only be removed or relocated upon the receipt of written approval from the Contract Administrator.

.2 Carefully dismantle and salvage electrical equipment, switches, fixtures, conduits, cables, wiring, boxes, as necessary to carry out proposed changes. Rehabilitate and relocate items of equipment as required and as indicated or specified.

.1 Deliver material and equipment not indicated for reuse to City for his disposal.

.3 Remove from site and dispose of material and equipment not indicated for reuse.

3.3 Workmanship

.1 Workmanship shall be the best quality, executed by workers qualified, experienced, and skilled in the respective duties for which they are employed.

.2 Qualified tradesman shall be used for all cable installation and terminations.

.3 The Contract Administrator reserves the right to require the dismissal from the site of workers deemed incompetent, careless, unsafe, or otherwise objectionable.

.4 The Contract Administrator reserves the right to require the proof of competency for the site superintendent, project coordinator, data and fiber installer and cable termination electricians. The Contractor is responsible to ensure the proper competencies for the work performed.

.5 In cases of dispute, decisions as to the quality, fitness or workmanship rest solely with the Contract Administrator, whose decision is final.

.6 If any of the work is such as to make it impractical to produce required results, immediately notify the Contract Administrator.

.7 All exposed parts of the electrical wiring systems such as exposed conduits, flush plates, cabinet trim, fixtures, etc., shall be square and true with the building construction.

3.4 Drawings and Specifications

.1 The Drawings, Specifications, and Appendices shall be used together, and all materials and labor mentioned in one but omitted from the other shall be considered as sufficiently specified and shall therefore be supplied and installed.

.2 The location of various items on the drawings is approximate, unless specified otherwise, and is subject to slight revisions as the work is installed in order to accommodate construction conditions.

.3 Where equipment and material dimensions are dependent upon building dimensions take field measurements, do not scale the drawings.

.4 The construction drawings are not intended to be scaled for roughing-in measurements nor to serve as Shop Drawings.

.5 The Contractor shall consult the existing architectural, structural, mechanical, or equipment drawings for dimensions, obstructions, and location of equipment of other trades. Any discrepancies between architectural, structural, mechanical, or equipment drawings and the work shown on the electrical drawings shall be reported to the Contract Administrator for adjustment.

.6 The installation details, instructions, and recommendations of the manufacturer of the product used, or modified to obtain the best end result, shall be the basis of attaining installation of the products for usage on this project except where definite and specific instructions are set forth herein or details are shown on the Drawings.

.7 Panels, cabinets, fixtures and special equipment are shown on the drawings only in a schematic manner and not necessarily in their specific location. The Contractor shall be responsible for exact locations of the outlets to form a functional and aesthetic installation either by careful review of all architectural elevations, tile patterns, surface finishes, and equipment arrangements or by consultation with the Contract Administrator and other trades involved.

3.5 Errors and Omissions

.1 In the event of errors or discrepancies between the drawings and specifications, the contractor shall obtain a ruling before Tenders are submitted.

.2 If a ruling has not been requested, it shall be assumed that in event of a discrepancy, the Contractor has allowed for the more expensive alternative.

.3 Where the authority having jurisdiction has indicated that changes are required which will cause delay and/or additional costs, the Contractor shall notify the Contract Administrator of the proposed changes as soon as practicable.

3.6 Alternative Equipment

.1 The Contractor is required to submit a base Tender for the specified equipment and show a separate price increase or reduction complete with detailed descriptions for alternative equipment.

.2 The Contract Administrator shall review alternate equipment after Tender submissions and be the sole judge of the acceptability of alternatives. Alternate proposals shall include comprehensive details and any perceived benefits to the City.

.3 After the award of the Contract Documents, any request for a substitution must be made in writing by the Contractor (not material supplier or subcontractor). Such request shall state the name of the product specified, the name of the product proposed for substitution, the reason for requesting the substitution, and any change in Contract Amount resulting from the substitution. No such substitution shall be made until an appropriate Contract Modification has been issued and approved.

3.7 Work In Existing Structures

.1 In general, any or all existing electrical equipment and services are to remain in operation and shall not be disturbed unless otherwise noted in these Specifications and/or on the drawings or as required for the proper execution of the work.

.2 In each area of the work, disconnect and carefully remove the existing electrical equipment and devices so noted. With the exception of items indicated as having to be re-used, all such existing equipment and devices shall be disposed of as specified herein. If not required by the City, remove them from the premises and site. All existing electrical equipment and devices indicated as not removed or abandoned are to be maintained in operation and any circuits disturbed by the construction shall be restored.

.3 Maintain existing electrical services and systems to and in the buildings throughout the project and all “down-time” shall be scheduled at least two (2) weeks in advance with the permission of the Contract Administrator and such scheduling shall be rigidly adhered to.

3.8 Dedicated Neutrals

.1 Each circuit shall have its own dedicated neutral wire. Shared neutral for more than one (1) circuit shall not be permitted.

3.9 Area Category and Classifications

.1 Refer to the drawings for building areas that have the non-ordinary electrical categories and classifications as defined in the CEC.

3.10 Enclosures

.1 Dry/General NEMA 1

.2	Wet/Outdoor/Corrosive/Category 1 or Category 2	NEMA 4X
.3	Hazardous	Rated for hazardous location
.4	Transformers and CSTE	NEMA 3R

.5 Any Network Panel not installed in a control room shall be NEMA 4X.

.6 Network panels installed in the following control rooms shall be NEMA 4X:

.1 Primary Clarifiers.

3.11 Nameplates and Labels

.1 Ensure Manufacturer's nameplates, CSA labels and identification nameplates are visible and legible after equipment is installed.

3.12 Conduit and Cable Installation

.1 Trench or directional drill as required to not disturb the existing plant concrete and facilities. If a roadway is required to be shut down for any installation, provide a shutdown plan to the Contract Administrator at least three weeks in advanced for approval.

.2 If plastic sleeves are used in fire rated walls or floors, remove before conduit installation.

.3 Install cables, conduits and fittings embedded or plastered over, close to building structure so furring can be kept to minimum.

.4 Do not mix wiring and/or cables from different panels within the same conduit runs or pull boxes. Provide equipment barriers where acceptable and where applicable.

3.13 Testing of Instrumentation Loops

.1 After all devices within a loop have been connected, check the loop for correct functioning and interaction with other loops, where applicable. Provide notice to the Engineer when the loops are going to be tested so that the tests may be witnessed by the Engineer.

.2 Check the operation of final control elements such as solenoid valves, actuators, etc. by manual control before checking with automatic control.

.3 Test all tubing for leaks in compliance with ISA RP7.1. Isolate all instruments when tubing is being tested to protect against over pressure.

.4 Perform tests and record results on test data forms which are included in this Section. Develop additional and/or more detailed test forms as necessary to suit more complex instrumentation.

.5 Sign and date all test reports. Submit the test reports.

.6 See Appendix H for the loop check form.

3.14 Cleaning

.1 The Contractor shall be responsible for the equipment and work until its completion and final acceptance.

.2 Clean and touch up surfaces of shop-painted equipment scratched or marred during shipment or installation, to match original paint.

.3 Clean and prime exposed non-galvanized hangers, racks, and fastenings to prevent rusting.

.4 In addition to final cleaning in accordance with the Special Conditions and Description of the Work, clean interiors and surfaces of all electrical equipment and general work area periodically to continuously maintain a clean working environment.

3.15 Contractor's Responsibility

.1 The Contractor shall replace any item which may be damaged, lost or stolen without additional cost to the City.

.2 Install all the Work promptly and in advance of concrete pouring or similar construction.

.3 Co-ordinate the Work with other Divisions such that all equipment, conduits and wiring will be installed in the best arrangement.

.4 Protect finished and unfinished work from damage. Any equipment or material damaged by weather, mishandling or other incident shall be replaced with new equipment and material at the direction of the Contract Administrator and at no additional cost.

.5 Before acceptance clean all exposed surfaces of lighting luminaries, lamps, Starters, Motor Control Panels and other electrical equipment of dust and plaster. Restore any damaged paint surfaces to factory-quality finish.

.6 Furnish all work and materials in accordance with CSA codes, provincial and local inspection department, and local utility regulatory requirements.

3.16 Alignment of Electrical Components

.1 Where there are two (2) or more equipment items (switches, outlets, panels or related equipment) are installed together, they shall be aligned vertically and/or horizontally to present a neat orderly appearance.

.2 They shall also be aligned and symmetrical with architectural elements.

3.17 Accessibility

.1 Install all work to be readily accessible for adjustment, operation and maintenance.

.2 Install all devices and protective systems to be accessible as per CEC (latest revision) requirements.

.3 Access hatches shall be installed at no additional cost to the Contract Documents in walls and ceilings to provide accessibility to electrical equipment within these areas.

.4 Locations of such access hatches shall be of an approved type and shall be installed in a pre-approved location.

3.18 Field Quality Control

.1 The Contractor shall conduct and pay for tests as identified in Sections 26 08 10, 40 99 91, and 40 99 92.

.2 Provide a manufacturer's certificate or letter confirming that the entire installation as it pertains to each system had been installed in accordance with the manufacturers' instructions.

.3 Carry out tests in presence of the Contract Administrator or City Representative.

.4 Provide instruments, meters, equipment and personnel required to conduct.

.5 Ground fault detectors shall be dynamically tested by injecting current flow into the zero sequence current sensor.

.6 Submit test results for the Contract Administrator's review.

3.19 Spare Parts

.1 Furnish spare parts, maintenance, and extra products in quantities specified in individual Specification Sections.

.2 Deliver to City and place in location as directed by City; obtain receipt prior to final payment.

.3 Coat parts to protect from moisture.

.4 Crate in containers designed for prolonged storage suitable for handling with hoisting equipment containers.

.5 Stencil on containers:

.1 Manufacturer/supplier name.

.2 Unit name.

.3 Spare part name.

.4 Manufacturer catalogue number.

.5 Other identifying information.

.6 Precautionary information.

3.20 Substantial Completion Inspection

.1 Prior to Substantial Completion inspection, submit written confirmation that:

.1 The installation as specified is completely assembled and wired.

.2 All wiring devices and other equipment are operational, clean and correctly labeled.

.3 All systems have been tested as required and are in proper working order.

.4 All lamacoid nameplates have been installed.

.5 Factory finished equipment has been cleaned, touched up or refinished to present a new appearance.

.6 Communication Networks, Device Level Busses, have been setup, addressed, tested and are fully functional.

.7 Operation and Maintenance manuals have been submitted.

3.21 Care, Operation and Start-Up

.1 Instruct the City's Representatives in the operation, care and maintenance of equipment.

3.22 Demolition

.1 Survey the existing electrical systems and equipment identified for removal with representatives from the other trades prior to performing any demolition work. Identify all conduit and equipment to be removed with tags or paint.

.2 Where a piece of equipment is to be removed all associated ancillary components (e.g. solenoid valves, pressure switches, etc.) and associated wiring and conduit shall also be removed.

.3 Equipment, building or structures scheduled for complete demolition shall be made safe from electrical shock hazard prior to demolition. Disconnect all electrical power, communications, alarm and signal system.

.4 Equipment scheduled to be turned over to the City shall be carefully disconnected, removed and delivered to the City where indicated. Provide labor, hoisting and transportation of the equipment. All other miscellaneous electrical materials, devices, etc., associated with the equipment being turned over shall be demolished and removed from the site.

.5 Remove electrical work associated with equipment scheduled for demolition except those portions to remain or be reused.

.6 Unless otherwise specifically noted, remove unused exposed conduit and support systems back to point of concealment including abandoned circuit above accessible ceiling finishes. Removed unused wiring back to source (or nearest point of usage).

.7 Disconnect abandoned outlets and removed devices. Removed abandoned outlets if conduit services them is abandoned or being removed. Provide blank covers for abandoned outlets which are not removed.

.8 Disconnect and remove abandoned electrical equipment unless otherwise indicated or specified.

.9 Repair adjacent construction and finishes damaged during demolition and extension work.

.10 Where electrical systems pass through the demolition areas to serve other portions of the premises, they shall remain or be suitably relocated and the system restored to normal operation.

.11 The electrical and process equipment to be removed or relocated under this contract has been identified on the Drawings.

.12 Trace out existing wiring that is to be relocated or removed and perform the relocation or removed work as required for a complete operating and safe system.

.13 Remove exposed conduits, wireways, outlet boxes, pull boxes and hangers made obsolete by the alterations, unless specifically designated to remain. Patch surfaces and provide blank covers for abandoned outlets which are removed.

.14 All equipment, materials, controls, motor starters, branch and feeder breakers, panelboards, transformers, wiring, raceways, etc. furnished and installed to the temporarily keep circuits energized shall be removed when the permanent installation is fully operational.

3.23 Protection of Electrical Equipment

.1 Material Delivery Schedule: Provide Contract Administrator with schedule within two (2) weeks after award of Contract.

.2 Store equipment in compliance with manufacturer's recommendations and as specified herein.

.3 Protect electrical equipment from the weather, especially from water dripping or splashing upon it, at all times during shipment, storage, and construction.

.4 Do not store equipment outdoors.

.5 Where equipment is installed or stored in moist areas, or unheated buildings, provide acceptable means to prevent moisture damage. Provide uniformly distributed source of heat in electrical equipment to prevent condensation and damage to electrical insulation systems.

3.24 Defective or Damaged Equipment

.1 All equipment shall be inspected for defects or damage upon delivery, report any defects or damages to the Contract Administrator within two business days. Damaged equipment shall not be used. Equipment damaged in shipment, storage, installation or through other means shall be replaced without additional cost to the City.

.2 All equipment showing signs of water damage shall be rejected regardless of dielectric test results.

.3 All electrical equipment is considered "in storage" regardless of location until first energized. Manufacturer's recommendations for storage precautions, conditions and care shall be followed.

3.25 Drawings and Specifications

.1 Drawings and specifications are typical of work to be done and of the arrangement desired. Provide accessories and appurtenances which the Contract Administrator deems functionally necessary for a complete installation, whether or not explicitly indicated or described.

3.26 As-Built Drawings

.1 The Contractor shall maintain a master set of as-built drawings showing the changes and deviations from the contract drawings on site and upon request provide to the Contract Administrator for review.

.2 Obtain a CAD set of drawings (wiring & control diagrams) from AECOM and use professional services for CAD and transfer the “As-Built” condition for all components on those drawings.

.3 A minimum of thirty (30) days prior to application for Final Payment, submit two sets of drawings for approval that are marked to show the as-installed equipment, devices, raceway locations and wiring. The markings on the drawings are to be neat, clean and legible.

.4 No Substantial Performance shall be issued until final “Record Drawing” CAD files and one set of prints have been received and accepted by the Contract Administrator.

.5 The final record drawings shall incorporate the new fibre rings as well as the existing network cabling. Refer to Figure 1, Existing Backbone Routing for the existing network. Confirm existing cables on site.

3.27 Guarantee / Warranty

.1 The Contractor shall guarantee/warrant all equipment supplied by the Contractor and replace with new at the Contractor’s expense any part which may fail or prove defective within a period of twelve (12) months after final acceptance.

3.28 Contract Closeout

.1 Provide in accordance with Section 01 77 00.

END OF SECTION

PROGRAMMABLE LOGIC CONTROLLERS AND REMOTE IO

GENERAL

1.1 Description

.1 Design, supply, and installation programmable logic controller (PLC) and Remote IO (RIO) based control panels for each process area in accordance with the requirements of these Specifications and associated drawings.

.2 Terminal blocks and associated components shall be housed in the same control panel as the associated IO Card.

.3 Development of the PLC programs and integration of the new area PLCs into the main Process Control System (PCS) are to be provided under this contract.

.4 Provide temporary stands to mount the PLC and RIO panel backboards during migration. Provide sufficient quantity such that all PLC and RIO backboards in an area can be temporarily mounted at once.

.5 PLC panel backboards are to be field removable for installation on temporary stands. Maximum continuous backboard width is 1 meter.

.6 PLCs will be Schneider Electric Modicon M580 as per the City's Standardized Agreement in Appendix F (RFP-756-2013). All PLCs shall be sourced through the Standardized Agreement at the City's negotiated costs.

.1 Reference RFP-756-2013 to receive standardized pricing.

1.2 Submittals

.1 Submit the following in accordance with Section 01 33 00, 40 95 13 Control Panels, and 40 96 00 Application Software:

.1 For each component and material submit shop drawing which shall include:

.1 Manufacturer.

.2 Model number.

.3 General data and description.

.4 Engineering specifications and data sheets.

.5 Catalog cuts.

.6 For information purposes only, submit manufacturer's printed installation instructions.

.2 For each process area submit a detailed PLC network diagram that show the PLC rack configuration and connections including redundant connections to the PCS.

.3 Standardized Programmable Logic Blocks

.1 Submit documented copies of the standardized programmable logic blocks.

.2 Limit the size and complexity of function blocks to provide generic usage across multiple process areas. Base functionality of equipment shall be included within the standardized blocks. Process specific checks and calculations shall occur outside of the standardized function blocks and pass through to the standardized block as a generic input or output.

.3 Documentation shall at a minimum include all details to understand the operation of all aspects of the logic block including:

.1 Inputs

.2 Outputs

.3 Intermediate Signals or Variables

.4 Data types

.5 Access Modifiers

.6 Control Response

.7 Compound Control Response

.8 Error Catching and Correction

.9 Limits

.10 Setpoints

.4 Use the existing DCS Function Code document and Control Expert help manual as reference in writing this documentation.

.5 Demonstrate all standardized programmable logic blocks.

1.3 Quality Assurance

.1 Provide in accordance with Section 01 43 00 and as specified.

1.4 Delivery, Storage and Handling

.1 Provide in accordance with Section 01 66 10 and as specified.

1.5 Equipment Identification

.1 Each PLC rack shall be tagged and labelled with lamacoid labels on the panel backboard where visible after wires are connected.

.1 If labels are obstructed by wires, provide and field install new lamacoid labels.

1.6 Warranty

.1 The Contractor shall warrant that all materials and equipment furnished under the contract are in good working order, free from defects, and in conformance with system specifications. All installed equipment shall conform to the manufacturer's official published specifications. The warranty shall begin at the system acceptance date and remain in effect for a period of one years from that date. The Contractor shall agree to repair, adjust, and/or replace (as determined by the Contract Administrator to be in its best interest) any defective equipment, materials, or other parts of the system at the Contractor's sole cost. The Owner will incur no costs for service or replacement of parts during the warranty period of one year. All third party warranties shall be passed through from the Contractor to the Owner.

.1 The system acceptance date shall be unique for each area based upon the successful completion of the switchover, commissioning, training, demonstration period, and O&M and as-built submittals for that work.

.2 The Contractor shall warrant that all programmable logic developed for the project shall be free from defects leading to unintended operation of the plant equipment. The programmable logic will be based on the Process Control Narratives and the existing DCS logic to replicate the existing control loops. The warranty shall begin at the system acceptance date and remain in effect for a period of one years from that date. The Contractor shall agree to repair or adjust the programmable logic if defects are found. The Contractor shall expedite the repair or adjustments to the level of severity to ensure no additional damages occur to the plant, personnel, or treatment capacity occur. All repairs or adjustments will not take longer than one (1) calendar month to complete from the time of notice.

.1 The City shall be allowed to make urgent or required corrections to the programmable logic to benefit the plant at their discretion. Adjustment to portions of the programmable logic does not remove the warranty coverage for any of the existing code produced by the contractor.

.3 The Contractor shall warrant and supply evidence that the installation of materials and hardware will be made in strict compliance with all applicable provisions of the Canadian Electrical Code.

.4 The Contractor shall warrant that the system will function in accordance with the manufacturer's published technical description guide.

2. PRODUCTS

2.1 Manufacturers

.1 PLCs and RIO Hardware:

.1 Use standardized products by the City via RFP 756-2013.

.2 No alternates or substitutes will be accepted.

.3 Part or Model numbers shall be as shown on Automation-Cabinet Layout drawings

.4 Provide all required hardware for a complete installation.

.2 PLC Software:

.1 Use standardized products by the City via RFP 756-2013.

.2 No alternates or substitutes will be accepted.

.3 See Section 40 96 00, Application Software for requirements.

2.2 Accessories

.1 Include the following accessories:

.1 RJ45 connection cable for Modbus port on CPU.

2.3 USB Memory Stick

.1 Provide a USB memory stick for each process area with the following:

.1 Latest PLC, HMI, and other applications programs and accompanying documentation.

.2 PLC, HMI, and any other used software and hardware manuals

.2 Provide the memory stick as per section 2.3.1 to the Contract Administrator prior to the commencement of any area commissioning activities.

.1 When emergency updates are pushed to the PLCs, HMIs, or other application programs, provide the Contract Administrator updated copies as soon as possible.

.3 Provide the memory stick as per section 2.3.1 to the Contract Administrator prior to the any area handover, the USB to include as left programs for PLC, HMI, and other applications programs and accompanying documentation.

2.4 Access Rights

.1 Provide predefined profile read-only access right to the city with each area PLC as the PLC becomes available online and connected to the PCS network.

.2 Provide the city Username and Password for each area PLC, the city reserves read-only access right for the duration of construction and prior to hand over.

2.5 Spare Parts

.1 Provide one (1) spare PLC processor card of each type used in the project.

.2 Provide two (2) spare PLC cards of each type used in the project, other than processor cards.

.3 Provide one (1) spare backplane of each type used in the project.

.4 Provide one (1) spare communication module of each type used in the project.

.5 Provide two (2) power supply modules of each type used in the project.

.6 Provide one (1) pre-manufactured fly wire cable for each card type.

.7 A complete set of the spare parts will be available at the beginning of commissioning each area.

3. EXECUTION

3.1 General

.1 Install the PLCs and RIOs as per manufacturer instructions and recommendations.

.2 Follow Cabinet Layout drawings for hardware layout.

3.2 Firmware and Software Versions

.1 Update the firmware of each PLC card to the version agreed upon with the City prior to the FAT and SIFT.

.1 Updating of firmware after the FAT and SIFT requires the agreement from the City and submission of a test and validation plan. The test and validation plan shall demonstrate every part of the application software impacted by the firmware.

.2 The Contractor shall inform the Contract Administrator of any new firmware or software updates issued by the manufacturer after FAT and SIFT. The Contractor shall inform the Contract Administrator if the installation of the new firmware or software update is required by the manufacturer.

.1 Testing and verification due to firmware or software updates shall be performed at no additional cost.

3.3 PLC Programming Services

.1 PLCs shall be programmed following the guidance of the City of Winnipeg's Automation Design Guide in Appendix E.

.2 Use the manufacture's default software blocks where applicable.

.3 Hot/Standby PLCs shall allow for Offline Application with Allowed Application Mismatch.

.4 Produce, submit for review, and use custom standardized programmable logic blocks as templates throughout project development.

.1 Submit the standardized programmable blocks in a form that is easily imported to Schneider Electric EcoStruxure Control Expert.

.5 Standardized programmable logic blocks shall be created for any combination of logic (for example, a pump control loop) that is used throughout the entire project five (5) or more times.

.1 Plan and submit the standardized programmable logic blocks during the PCS configuration stage.

.2 Retroactively create and submit standardized programmable logic blocks if the usage meets and exceeds the usage threshold. Update prior logic as required. The City may waive the requirement to update and re-commission prior logic.

.3 The City may waive the requirement for any individual logic block to become a standardized programmable logic block at their discretion.

.6 Use testing variables to enable and disable logic sections at a time during the switchover events. Ensure the testing variable status is clearly visible on the relevant HMI screens.

.7 Organize the program structure in a logical order and groupings to maximize the clarity of the program logic and enhance debugging ability.

.1 Where compound control loops are used that involve multiple stages, multiple feedback loops, or spans multiple sheets, provide sufficient documentation to describe the program functionality clearly. Reference the control blocks, functions, inputs, and outputs as needed.

.8 Remove forced values from the final version of the programs before handover.

.9 Daily (24 Hours) totals begins 08:00 AM CST and ends 08:00 AM CST next day

.10 See Section 40 96 00, Application Software for additional requirements.

.11 Use DTM for device configuration and communication.

3.4 Time Synchronization

.1 Set up the HMI server as the NTP server for the NOC and processor cards.

.1 Set the maximum time interval to as long as possible in up to 1024 seconds. Reduce the time interval if required for process application.

3.5 PLC Commissioning Services

.1 Provide all required PLC and RIO commissioning services as per 40 99 92 - Automation Testing and Commissioning.

3.6 City Access

.1 Designated City personnel shall be given super-user administrative access to all live system components to facilitate and maintain the plants treatment capabilities throughout the entire project duration.

.1 A Field Instruction will be provided to the Integrator each incident the City is required to modifying the working applications to maintain plant functionality.

.2 The Integrator may maintain the City’s changes or can implement their own correction.

3.7 Contract Closeout

.1 Provide in accordance with Section 01 77 00.

END OF SECTION

CONTROL PANELS

1. GENERAL

1.1 Description

.1 Provide materials and fabrication of custom control panels as indicated and in compliance with Contract Documents.

.2 Panels shall incorporate controls and protection devices as shown on the Contract Documents.

.3 Provide temporary PLC backplane stands for use during switchovers.

.4 Control Panels shall be fabricated with removable backplanes to allow for mounting on temporary backplane. Backplane maximum continuous width is 1 meter.

.5 All panels shall be built by a CSA/cUL approved panel shop or manufacturer. Each panel shall bear the CSA/cUL seal with the manufacturer's file number.

.6 All new panels shall be factory assembled and pre-wired. Factory Acceptance Tests (FATs) and System Integration Functional Tests (SIFTs) as per 40 99 91 shall be performed and witnessed and accepted by the Contract Administrator prior to shipping any panels.

.7 Supply, install, wire and test all components inside the Control Panels according to the specifications herein and the drawings.

.8 Any panels that are substantially modified from the original installation shall be inspected by an authorized CSA/cUL inspector and have a new CSA/cUL applied. Perform any required updated to substantially modified panels to meet the CSA/cUL requirements.

1.2 Submittals

.1 Submit the following in accordance with Section 01 33 00:

.1 For each component and material submit shop drawing which shall include:

.1 Schematic diagrams shall show the equipment serial or tag number, the Owner's drawing number, contract number, or similar identification which will indicate the particular equipment to which the diagrams apply. Diagrams shall show all equipment in the electrical system including internal wiring of subassemblies. Diagrams of subassemblies may be furnished on separate sheets.

.2 Wiring and interconnection diagrams shall show all wire connections to device terminals, terminal blocks, and all wiring within the panel. No more than two wires shall be shown connected to any one terminal. Terminals shall contain unique identifiers. All signals shall be able to be fully traced on the drawings.

.3 Identify each device by a unique number or number-letter combination.

.4 Detailed IO module wiring diagrams.

.5 Detailed loop diagrams of connections to Field Device Panels, Termination Panels, Marshalling Panels, and HVAC Panels.

.6 Show spare contacts.

.7 Panel Layout drawings

.8 Complete Bill of Materials

.9 Configuration/parameter sheets including switch settings, parameter settings, and addresses. Show factory default settings and proposed settings.

.10 Diagram showing dip switches complete with proposed settings

.2 Submit shop drawings for approval prior to panel fabrication.

.3 Keep updated red line drawings of each panel in each control room during area migrations.

.4 Provide as-built drawings at the end of the area migration of the panel including detailed IO module wiring diagrams, panel layouts, panel power distribution schematics, and detailed loop drawings.

.1 As-built drawings to adhere to the City of Winnipeg CAD Drafting Manual and the WWD CAD/GIS Standards.

1.3 Quality Assurance

1.4 Inspection

.1 Provide in accordance with Section 01 43 00 and as specified.

.2 A factory inspection of the control panels will be performed at the discretion of the Contract Administrator based upon the pre-shipment submittals.

.3 Demonstrate and test the control panel in the presence of the Contract Administrator designated representative as part of the FAT and SIFT.

1.5 Delivery, Storage and Handling

.1 Provide in accordance with Section 01 66 10 and as specified.

.2 Transportation method to site shall be in an air ride van or equivalent.

1.6 Equipment Identification

.1 Each Panel shall be tagged with lamacoid labels on the panel backboard where visible after wires are connected.

.2 Each panel shall have a CSA certification nameplate.

1.7 Warranty

.1 The Contractor shall warrant that all materials and equipment furnished under the contract are in good working order, free from defects, and in conformance with system specifications. All installed equipment shall conform to the manufacturer's official published specifications. The warranty shall begin at the system acceptance date and remain in effect for a period of one years from that date. The Contractor shall agree to repair, adjust, and/or replace (as determined by the Contract Administrator to be in its best interest) any defective equipment, materials, or other parts of the system at the Contractor's sole cost. The Owner will incur no costs for service or replacement of parts during the warranty period of five years. All third-party warranties shall be passed through from the Contractor to the Owner.

.2 The Contractor shall warrant and supply evidence that the installation of materials and hardware will be made in strict compliance with all applicable provisions of the Canadian Electrical Code.

.3 The Contractor shall warrant that the system and individual parts will function in accordance with the manufacturers' published technical description guide.

2. PRODUCTS

2.1 Manufacturers

.1 Devices of each function shall be of the same type and manufacturer.

2.2 Enclosures

.1 Design and test control enclosures in conformance with C22.2 Nº286. Enclosure types shall be as follows unless noted otherwise in the drawings or specifications:

.1 Indoor use, non process area: NEMA Type 12

.2 Outdoor use or process area: NEMA Type 4

.3 Corrosive area: NEMA Type 4X

.2 The panels in the following areas will be NEMA Type 4X:

.1 Area P: Primary Clarifiers.

.2 Area D: Digesters.

.3 The depth of the control enclosure or compartment shall be a minimum consistent with the maximum depth of the control devices plus the required electrical clearance. In no case shall the depth of the enclosure be less than 200 mm.

.4 Provide mounting panel for mounting of interior components. Panel finish shall be white enamel.

.5 Where heating from control devices results in a temperature rise which is detrimental to the contained equipment or its operation, provide louvers or forced air ventilation. Design ventilating openings to prevent the entrance of any deleterious substance. When forced air

ventilation is required, the cabinets shall be pressurized. Air filters shall be of commercially available types and sizes.

.6 Provide a permanent metal data pocket attached to the inside of the enclosure. If space permits, the pocket shall be at least 250 mm wide and of depth and thickness to accommodate electrical diagrams.

.7 Enclosure construction shall be minimum 14 gage steel. Finish shall be white enamel inside and gray prime outside over phosphatized surface. Provide continuous hinges for enclosure doors with external screw clamps. Provide hasp and staples for padlocking.

Control panels shall be provided with heating, ventilation, and/or cooling as required to ensure the internal temperature and humidity are maintained at acceptable levels for the components within.

.1 Perform a heat-load analysis for all control panels containing heat-generating components. Determine if the thermal dissipation via the enclosure walls is sufficient or if additional cooling is required. If additional cooling is required, consider installing filtered louvers at opposite corners of the control panel to provide cooling through natural convection. If natural convection is insufficient, install a filtered fan unit to provide forced air flow through the panel.

.2 Where fans are provided on control panels, ensure that the fans positively pressurize the cabinet to prevent ingress of contaminants through small openings. The air used to positively pressurize the cabinets must be from a clean source.

.8 Manufacturer:

.1 Hoffman Proline enclosures

.2 Or approved equivalent.

2.3 Components

.1 All components are to be DIN Rail Mounted.

.2 DIN Rail style TS 35mm, slotted.

.1 When used to mount terminals, use straight risers such that the top of the terminals are at the same height as the wiring duct

2.4 Control Wiring

.1 120-volt control wiring shall be Type MTW, THWN, or THHN. Conductors shall not be smaller than No. 14 AWG. Ampacity shall be in accordance with the CEC.

.2 Instrumentation signal cables shall be of the type used for field wiring.

.3 Wire and cable insulation shall be flame retardant.

.4 High flexible stranding type wire shall be used in restricted spaces or across hinged sections.

.5 Wire colour to follow the City of Winnipeg's Automation Design Guide, Electrical Design Guide, and Identification Design Guide.

2.5 Marking

.1 Identify wire terminations with a number to correspond with the schematic diagrams. Identification tags shall be preprinted white heat-shrinkable tubing, Raychem Thermofit TMS.

.2 Plainly and permanently identify control and power devices using the same identification as shown on the schematic diagrams. Show identification for devices inside the enclosure on a plate adjacent to, not on, the device.

2.6 Supply Circuit Disconnecting Means

.1 Provide a supply circuit disconnect for each control panel. Disconnect shall be a circuit breaker mounted within the control enclosure operated by a variable depth flange-mounted circuit breaker operating mechanism.

2.7 Wiring Methods

.1 Panel wiring shall be neatly contained in narrow-slot ventilated wireways, including incoming and outgoing field control wiring. Wireways shall be light gray coloured, restricted slot design, with matching snap-on covers. Use light blue coloured wireways for intrinsically safe wireways. Provide wireways with mounting holes and nylon "push" rivets for mounting. Wireways material shall be PVC or noryl.

.1 Size wireways such that they are not more than 40% full once the wiring is installed.

.2 Provide minimum 50 mm of clearance between wireway and wire terminations to allow for clear viewing of wire identification marking.

.3 Provide the mandatory ventilation clearances around heat-generating components as specified by the component manufacturer. Indicate mandatory component clearances on the panel layout drawings.

.4 Tie wiring run to control devices on the front door together at short intervals and secure to the inside front door with adhesive mounts. Mounts shall be adjustable releasable-clamp type for wire bundles 17mm in diameter or smaller or releasable nylon cable ties for bundles larger than 17 mm in diameter. Attach mounts to front panel with adhesive.

.5 Provide a minimum of 19 mm separation between ventilated wireways containing intrinsically safe wiring and ventilated wireways containing non-intrinsically safe wiring.

.6 Categorize and group conductors based on their application. Provide separate wireways for conductors of each category in order to minimize electromagnetic interference. Categories 3 and 4 may be combined if space is limited.

.1 Category 1: AC Power and Control

.1 AC Power for power supplies

.2 120 VAC Control Wiring

.3 24 VAC Control Wiring

.2 Category 2: DC Power and Control

.1 DC Power

.2 DC Control Wiring

.3 Category 3: Analog Signals

.1 Analog I/O

.4 Category 4: Communications:

.1 Communication Cables

2.8 Terminal Blocks

.1 Provide enough terminal blocks for designed requirements including indicated spares. Wire all spare terminal blocks back to PLC or RIO cards.

.1 One terminal block shall be provided for each wire entering or exiting the control panel.

.2 No more than two wires shall terminate on the same terminal.

.2 Provide screw clamp compression terminals in style shown on drawing. Approved manufacturer:

.1 Phoenix Contact

.3 Ground Terminals shall be electrically grounded to the mounted DIN rail.

.4 Provide 15 spare terminal blocks of each type for the project.

2.9 Ground Bar

.1 Provide Electric and Instrument Ground bus bars for each panel. Connect Electric and Instrument ground bus bars at circuit location nearest the panel external ground connection.

.2 Connect only instrument grounds to the Instrument Ground bus bar.

.3 Bus bars to have pre-tapped holes with screws. Size for 25% spare capacity, maximum one wire per screw.

2.10 Pushbuttons

.1 Schneider Type K or SK or approved equivalent.

2.11 Pilot Light

.1 Push to test.

.2 Schneider Type K or SK or approved equivalent.

2.12 PLC and RIOs

.1 See Specification 40 94 43.

2.13 Dual Ring Switches

.1 Provide dual ring switches for networked IO as shown on Automation-Cabinet Layout drawings.

.2 Modicon Extended Managed Switch 8TX (MCSESM083F23F1). No alternates or substitutes will be accepted.

.3 Provide all required hardware for a complete installation.

2.14 Relays

.1 Phoenix Contact PLC-RSC Series.

.2 Or approved equivalent.

2.15 Signal Conditioning Module

.1 Where required, provide signal conditioning modules which comply with the following requirements:

.1 Analog signal inputs: 4-20 mA DC into 500 ohms or less.

.2 Analog signal outputs: 4-20 mA DC into 500 ohms.

.3 Discrete output contacts: SPDT or DPDT rated 5A.

.4 Arrange electronic trips so that output contact opens in case of loss of signal or loss of power supply.

.5 Signal conditioning and isolating modules to be rated for continuous operation in an ambient temperature of 0 to 80°C. The ambient temperature effect on module accuracy is not to exceed plus or minus 0.01% per °C within that range.

.6 Span and zero adjustments to be made by front accessible multi-turn potentiometers.

.7 Provide electronic trip modules with LED indicators for relay status.

.8 Signal conditioning modules to withstand 30 V per meter radio frequency radiation between 200 and 500 MHz with not more than 0.25% calibration effect. Provide

modules with traps on the terminals to shunt conducted radio frequency interference to ground.

.9 Provide effective isolation of signal and power supply terminals from the case.

2.16 Power Supplies

.1 Provide all DC power supplies as required for all instrument circuits. Power all circuits from the local control panels or marshalling panels. Power supplies to be equal to Hammond or G.F.C., complete with an overvoltage protection module.

.2 Provide redundant configurations for power supply equipment serving more than one instrument loop, so that failure of a single unit will not disable all or any shared part of the instrumentation and communication system. Provide diode isolation for redundant direct current supply units and ground the negative terminal of the power supply.

.3 Unless otherwise required, all DC power supplies to be rated 24 VDC, adjustable ±20%, and set to provide 24 V on the panel direct current bus. Size the power supply for two times the connected load, minimum size is 2 amps.

2.17 UPS Power Supply

.1 Provide an online un-interruptible power supply (UPS) in each control panel that is not fed by an external UPS

.2 UPS to provide the following inputs to the PLC:

.1 On Battery Status.

.2 Fault.

.3 Size UPS standby capacity for 60 minutes at full load rating.

.4 Provide on-line units, acceptable manufactures:

.1 Phoenix Contact,

.2 Toshiba,

.3 Or approved equal.

2.18 Lighting

.1 Provide lighting for all panels

.2 Fixture mounting: top-centre of enclosure, unless otherwise noted.

.3 Lights: LED, white.

.4 Power supply: 24 VDC.

.5 Manufacturer:

.1 Hoffman.

.2 Or approved equivalent.

2.19 Temporary PLC Stand

2.20 Spare Parts

.1 Provide ten (10) spare fuses for each panel of each rating type. Store in resealable plastic bag inside panel document holder.

3. EXECUTION

3.1 General

.1 Construct panels in conformance with C22.2 N°286.

3.2 Wiring

.1 Wire panels as shown in the contract drawings and as per the Shop Drawing.

.2 All wires and cables inside the control panels shall be identified on both ends using permanent labels. Labels shall be machine printed; handwritten labels shall not be accepted. Utilize heat shrink labels where practicable.

.1 Wire labels shall match the drawing labels.

.2 Wire terminations and connections shall match the drawings and schematics.

.3 All individual conductors shall be labelled.

.3 No splices shall be used while wiring the panel.

3.3 Grounding

.1 All control panel components shall be adequately grounded in accordance with the component manufacturer’s instructions, especially control system components.

.2 Bond all devices to the panel ground bus bar.

3.4 Terminals

.1 Jumper bars shall be used where possible instead of jumper wires.

3.5 Testing

.1 Test the control panel prior to the FAT. Provide a check list of the tests performed and results.

.2 Tests to include at a minimum:

.1 Power supply functionality

.2 PLC and RIO processor and card functionality

.3 Loop checks of all circuits

.4 Relay and switch functionality

.5 Receptacle and lighting functionality

.6 All networking functionality

3.6 Factory Acceptance Tests

.1 Perform Factory Acceptance Tests and System Integration Functionality Tests as specified in 40 99 91.

3.7 Inspection

.1 Inspect all panels after delivery to ensure no signs of damage from transportation. Inspect wires for loosened terminations.

.2 Notify the Contract Administrator and replace any component damaged in transportation.

3.8 Contract Closeout

.1 Provide in accordance with Section 01 77 00.

END OF SECTION

CONTROL SYSTEM SERVERS AND WORKSTATIONS

1. GENERAL

1.1 Description

.1 Three (3) servers have been pre-procured by the City for use in the PCS.

.2 Supply, install, and feed power to two (2) Server Cabinets dedicated for the servers.

.3 Install and configure the three (3) PCS servers for a fully functional PCS system.

.4 Provide new PCS Operator Workstations in each area as shown on the drawings.

.1 Provide interim KVM switches as shown on the drawings for use of common peripherals for both the DCS and PCS.

.2 Each area requires full access to the DCS and PCS throughout the entire migration for plant operation.

.5 Provide four (4) Rugged Clients in the HLW PLC panels for connection to the pedestal HMIs.

.6 Provide two (2) new PCS Maintenance Workstations.

1.2 Submittals

.1 Submit in accordance with Section 01 33 00.

1.3 Quality Assurance

.1 Provide in accordance with Section 01 43 00 and as specified.

1.4 Delivery, Storage and Handling

.1 Provide in accordance with Section 01 66 10 and as specified.

1.5 Equipment Identification

.1 Each Server Cabinet, Server, and Workstation shall be tagged with lamacoid labels on the device enclosure in a spot that is visible.

.1 Labels shall not block visibility of any screens, components, fasteners, or nameplates. If a suitable location cannot be found, notify the Contract Administrator.

1.6 Warranty

.1 The Contractor shall warrant that all materials and equipment furnished under the contract are in good working order, free from defects, and in conformance with system specifications. All installed equipment shall conform to the manufacturer’s official published specifications. The warranty shall begin at the system acceptance date and remain in effect for a period of one years from that date. The Contractor shall agree to repair, adjust, and/or replace (as determined by the Contract Administrator to be in its best interest) any defective equipment, materials, or other parts of the system at the Contractor's sole cost. The Owner will incur no

costs for service or replacement of parts during the warranty period of one years. All third party warranties shall be passed through from the Contractor to the Owner.

.2 The Contractor shall warrant and supply evidence that the installation of materials and hardware will be made in strict compliance with all applicable provisions of the Canadian Electrical Code.

.3 The Contractor shall warrant that the system and individual parts will function in accordance with the manufacturers' published technical description guide.

2. PRODUCTS

2.1 Server Cabinets

.1 Each Server cabinet shall be provided with the following:

.2 Size width and depth for pre-purchased servers.

.1 Rack Units: 45

.3 Cabinet shall have perforated front, top and back panels for passive cooling. Cabinet passive cooling utilizes the equipments' fans to exchange ambient air.

.4 Cables shall route tidily to prevent air circulation restrictions.

.5 Provide an integral power distribution unit for rack components.

.1 120VAC.

.2 Server cabinets shall be powered by UPS circuit.

Accessories as required for a complete installation.

.6 Server installation arrangement shall be determined by the City upon submittals of shop drawings.

.7 Enclosure Manufacturer:

.1 Hoffman Proline Flotek Server Cabinets

.2 Or approved equivalent

2.2 Software

.1 Provide all software and licenses for a complete and operational system. Install and set up all licenses on hardware specified.

.1 Source license volumes based on server counts, controller counts, IO list count, and redundancy requirements.

.2 Maintain licenses for the entire duration of the project.

.2 Provide the Contract Administrator with a list every three (3) months of current software licences, account information, expiration dates, renewal information and costs.

.1 License information shall be included in the final O&Ms.

.3 Before installing any software of firmware, discuss and confirm with the City the version of software or firmware to be installed and standardized on.

.4 At the end of each migration stage, upgrade all software to the latest stable release version.

.5 All servers and workstations shall have drivers for printing PDFs.

.6 Provide software licenses including, but not limited to the following:

.1 Windows Server Standard 2022 license (Quantity: 11)

.1 Provide each license for the corresponding core count.

.2 vSphere license for VMWare ESXi 8.0 hypervisor (Quantity: 11)

.1 Provide each license for 32 core CPUs

.3 Windows 10 LTSC Enterprise Licence for Maintenance Workstation (Quantity: 2)

.4 Windows 10 LTSC Enterprise Licence for Operator Workstations (Quantity: 16)

.5 RDS CAL License (Quantity: 5)

.6 Microsoft Office Excel for Maintenance Workstations (Quantity: 2)

.7 Aveva Plant SCADA server license (Quantity: 3)

.8 Aveva Plant SCADA desktop client license (Quantity: 18)

.9 Aveva Plant SCADA Connector (Quantity: As Required)

.10 Aveva Historian Server License (Quantity: 3)

.11 Aveva Historian Client License (Quantity: 14)

.12 EcoStruxure Control Expert eXtra Large with Group 3 users (Unity Pro) (Quantity: 1)

.13 Moxa MXStudio Industrial Network Management Suite (Quantity: 1)

.14 Provide additional licenses as required for implementation (ex. OPC licenses)

2.3 Operator Workstation Hardware

.1 Operator workstations are to be fan-less machines with suitable passive cooling.

.2 Processor:

.1 Minimum: 2.4 GHz

.2 Minimum: 4 Core

.3 RAM:

.1 Minimum: 8 GB DDR4

.4 Storage:

.1 128GB Solid State Drive

.5 Video Output:

.1 Port 1: HDMI v1.3, 1920x1080 60Hz

.6 Network Ports:

.1 All operator workstations with the exception of the Digesters area operator workstations shall have 1 Gb/s Ethernet ports.

.2 The two operator workstations in the Digesters area (CWO-D8001 and CWO-D8002) will have a direct fibre connection. Install multimode fibre NIC cards in the Digesters operator workstations.

.3 Connect to the Supervisory Network

.7 USB Ports:

.1 Minimum: 4 ports at USB 3 10 Gb/s

.8 Audio Port:

.1 HDMI and 3.5mm TRRS audio jack

.9 Power Supply:

.1 Voltage: 120Vac

.2 Rating: Minimum 80 Plus Gold

.10 Operating System:

.1 Windows 10 LTSC

.11 Monitor:

.1 Type: LED –backlit LCD

.2 Size: 32” diagonal

.3 Aspect Ratio: Widescreen

.4 Resolution: 1920 X 1080 @60HZ

.5 Video Interface: VGA/HDMI/DP

.12 Mouse

.1 Two (2) buttons with mouse wheel,

.2 Sensor: laser or optical,

.3 Colour: Black,

.4 Connection: Corded, USB

.5 Mousepad: fabric covered foam pad

.13 Keyboard

.1 Layout: Commercial Grade, US-layout, integral number keypad

.2 Colour: Black.

.3 Connected: Corded, USB

2.4 Operator Workstation Software

.1 License and Install McAfee End Point Security on each PCS Workstation

.1 Configure McAfee according to Plant SCADA vendor recommendations for compatibility.

.2 The City to provide the local repository for updating the EPS. Schedule automatic updates to be performed weekly for each workstation. Set up the updates to occur on Tuesdays, Wednesdays, or Thursdays at 12:00PM such that the updates are evenly spread across the dates

2.5 Operator Workstation Desk

.1 Provide Operator Workstation Desks as shown on the drawings.

.2 Dimensions: 600mm wide, 1000mm tall, 890 mm deep

.3 Minimum two Drawers per desk

.4 Load rating: 300 lbs.

2.6 Maintenance Workstation

.1 Provide, install, and configure two (2) Maintenance Workstations located in the Main Building.

.2 Processor:

.1 Minimum: 2.4 GHz

.2 Minimum: 8 Core

.3 RAM:

.1 Minimum: 16 GB DDR4

.4 Storage:

.1 128GB Solid State Drive – Boot Drive

.2 2TB SATA Hard drive

.5 Video Output:

.1 Port 1: HDMI v1.3, 1920x1080 60Hz

.2 Port 2: Display Port DP 1.1, 1920x1080 60Hz

.3 Port 3: Display Port DP 1.1, 1920x1080 60Hz

.6 Network Ports:

.1 Ethernet 1 Gb/s, Quantity 3

.2 Connect to the Control Network, Server Network and Supervisory network.

.7 USB Ports:

.1 Minimum: 4 ports at USB 3 10 Gb/s

.8 Audio Port:

.1 HDMI and 3.5mm TRRS audio jack

.9 Power Supply:

.1 Voltage: 120VAC

.2 Rating: Minimum 80 Plus Gold

.10 Operating System:

.1 Windows 10 LTSC

.11 Monitor:

.1 Type: LED –backlit LCD

.2 Size: 32” diagonal

.3 Aspect Ratio: Widescreen

.4 Resolution: 1920 X 1080 @60HZ

.5 Video Interface: VGA/HDMI/DP

.12 Mouse

.1 Two (2) buttons with mouse wheel,

.2 Sensor: laser or optical,

.3 Colour: Black,

.4 Connection: Corded, USB

.5 Mousepad: fabric covered foam pad

.13 Keyboard

.1 Layout: Commercial Grade, US-layout, integral number keypad

.2 Colour: Black.

.3 Connected: Corded, USB

2.7 Rugged Clients

.1 Enclosure: Wall Mountable

.2 Temperature Rating: -10C to 50C

.3 Processor:

.1 Minimum: 2.4 GHz

.2 Minimum: 4 Core

.4 RAM:

.1 Minimum: 8 GB DDR4

.5 Storage:

.1 128GB Solid State Drive

.6 Video Output:

.1 VGA Output;

.2 Or HDMI/Display Port, with a VGA adaptor compatible with the existing HLW Pedestal HMIs.

.7 Network Ports:

.1 1 Gb/s Ethernet ports.

.2 Connect to the Supervisory Network

.8 USB Ports:

.1 Minimum: 4 ports at USB 3 10 Gb/s

.9 Power Supply:

.1 Voltage: 120Vac

.10 Operating System:

.1 Windows 10 LTSC

.11 Approved Model:

.1 Premio: BCO-2000-WHL-U

.2 Or Approved Alternate

3. EXECUTION

3.1 Server Cabinet Installation

.1 Supply, install, and feed power to two (2) Server Cabinets dedicated for the servers.

.2 Install servers in server cabinets.

.3 Server Cabinet 1

.1 Location: Main Server Room

.2 Contains:

.1 Server CS-A8100

.2 Server CS-A8300

.4 Server Cabinet 2

.1 Location: Secondary Control Room

.2 Contains:

.1 Server CS-A8200

.5 Server racks to be powered by UPS Circuits.

3.2 Server Configuration

.1 Set up and configure servers as described. Provide and set up any licenses as required for functionality.

.2 Boot Drives: RAID 1

.3 Storage Drives: RAID 5

.4 Enable time synchronization using NTP with NTP server address provided by the City.

.5 Connect each server to the Control Network, the Supervisory Network, and the Server Network. Refer to City Automation Design Guide for servers communication within the networks.

.1 Control Network:

.1 Configure for communication to PLC and process level controllers.

.2 Aveva Plant will communicate with PLCs for monitoring, controlling, and alarming.

.3 Aveva HMI server will communicate with PLCs for data storage.

.1 HMI Trend graphs will receive data from the Trend Server. Trend data frequencies and events will be recorded for one year Retention time.

.1 Analog trend data will use 2-byte or 8-byte for data size as determined on a case by case basis. Provide analog data size in the IO list shop drawings.

.2 Trend data will be exported to the Tier 1Historian Server for long term storage. Retention time of the City's Historian data will manually managed.

.3 Develop HMI clients to retrieve historical data from Historian and utilize preconfigure trend function. Aveva Citect SCADA Connector software will be installed on all HMI clients.

.4 PCS historian trend sampling frequency, deadband and registered events setting will be configured similar to NEWPCC DCS historian. Settings are subject to change or verified during project stages.

.2 Supervisory Network:

.1 Configure for communication with Workstations

.2 Aveva Plant will communicate with the desktop client applications for monitoring, controlling, alarming, and data trending from the historian.

.3 Aveva Historian will communicate with historian clients for access to the historian data.

.4 Aveva Historian will monitor the Tier 1 and Tier 2 Historian statuses and perform data checks and data backup across the supervisory network.

.3 Server Network:

.1 Configure for communication between the servers.

.4 Demilitarized Zone (DMZ) Network:

.1 Configure the network to be accessed by both the NEWPCC Administration Network and the Supervisory Network to convey read-only information from the PCS to the Administration Network.

.6 Configure and group Network Interface Cards for NIC Teaming with automatic fault recovery.

.7 For OPC UA Servers:

.1 Disable encrypted communications.

.2 Enable anonymous access.

.3 Provide the City with the server URL.

3.3 Server Virtual Machines

.1 Set up each server with VMWare ESXi to deploy Virtual Machines (VMs) on each server. Set up the VMs listed below.

.2 Run the available demo modes for each server software to review system loading and provide loading report to the Contract Administrator. Allow for re-installation of each VM to reallocate resources.

.3 Disable local operating system firewalls

.4 Server system to report alarms to alarm server including high resource usage

.5 All systems shall run in service mode. No windows user should be required to login after system boot to have a fully functional system.

.6 All license strings shall reside on each local machine.

.7 CS-A8100:

.1 CS-A8101 – HMI Server A:

.1 Applications:

.1 Primary IO Server

.2 Primary Alarm Server

.3 Primary Trends Server

.4 Primary Report Server

.2 CPU Cores: 8

.3 RAM: 16 GB

.4 Storage: 500 GB

.5 HMI Servers shall function as NTP server.

.6 Confirm the HMI Server A to function as the System Management Server

.2 CS-A8102 – Tier 1 Historian Server:

.1 Applications:

.1 Tier 1 Historian Server

.2 CPU Cores: 8

.3 RAM: 16 GB

.4 Storage: 1.5 TB

.3 CS-A8103 – Domain Controller

CPU Cores: 2

.1 RAM: 2 GB

Storage: 128 GB

.8 CS-A8200:

.1 CS-A8201 – HMI Server B:

.1 Applications:

.1 Secondary IO Server

.2 Secondary Alarm Server

.3 Secondary Trends Server

.4 Secondary Report Server

.2 CPU Cores: 8

.3 RAM: 16 GB

.4 Storage: 500 GB

.5 HMI Servers shall function as NTP server.

.2 CS-A8202 – Domain Controller Server

.1 CPU Cores: 2

.2 RAM: 2 GB

.3 Storage: 128 GB

.9 CS-A8300:

.1 CS-A8301 – Demilitarized Zone (DMZ) Server

.1 CPU Cores: 4

.2 RAM: 4 GB

.3 Storage: 256 GB

.2 CS-A8302 – DMZ Domain Controller

.1 CPU Cores: 2

.2 RAM: 2 GB

.3 Storage: 128 GB

.3 CS-A8303 – Tier 2 Historian Server:

.1 Applications:

.1 Tier 2 Historian Server

.2 CPU Cores: 8

.3 RAM: 16 GB

.4 Storage: 1.5 TB

.4 Additional Virtual Machines will be deployed to server CS-A8300 to facilitate sandbox areas for PCS development. Additional Virtual Machines will be managed by the owner of the Server.

.1 The physical and virtual servers shall be handed over to the City for plant operation after the switchover of the first area. The integrator will request from the City sandbox areas to be deployed with all requirements needed for the application.

.2 Upon handover the server shall be set up and ready to deploy servers for sandbox and development areas.

.10 It is recommended to implement a deployment virtual server on CS-A8100 to execute HMI updates on PCS live systems to avoid any interruptions on the plant HMI after hand over of

the servers and the first migrated area. The HMI deployments files will uploaded to deployment server and transferred to HMI servers.

.1 If not using a deployment server, work with the City to develop an acceptable method for deploying HMI updates.

3.4 Historian

.1 Configure the Historian as per the City's Historical Data Retention Standard

.2 Parameters

.1 Set TimeStampRule = 0

.2 Use "Simple Replication Naming Scheme: <SourceTagName>" for the Replication Server Property.

3.5 Domain Controller

.1 The City has existing Domain Controllers on Supervisory Network and on DMZ network.

.2 Provide two separate domain controllers for the Supervisory network. One of the domain controllers shall be on the DMZ network.

.3 The domain controllers provided under this project shall join City's existing domain. At a minimum the following shall be completed prior to requesting to join the City's existing domain.

.1 Install the operating system

.2 Configure the correct time zone

.3 Configure the network

.4 Enable Remote Desktop

.5 Set Remote Registry service startup type to Automatic

.6 Disable Windows Update Service

.4 Domain Controllers' Windows Time service shall have Startup Type "Automatic". Use the W32tm.exe tool to configure Windows Time service (W32time) "manualpeerlist" provided by the City.

.5 For all computers and servers within the domain:

.1 Windows Time service shall have Startup Type "Automatic". The time source will be one of the domain controllers by default and no specific time source needs to be specified.

.6 The DMZ Group will be able to:

.1 Remotely login the HMI server. The group will be view only and only able to access the HMI via Plant SCADA project internal view only account.

.2 Have read only access to tier-2 historian server via the Aveva Historian Client.

3.6 User Accounts

.1 The HLAP defines the existing preconfigured user groups from the City's existing Domain Controller, accounts of each level will be provided for the Integrator to complete testing and commissioning. Consult with the City if additional domain user groups and/or accounts are required to meet the functionality of the PCS.

.2 The Integrator will have local administrator privileges (except the Domain Controller) to hardware under the Integrators ownership.

.3 Local user groups should be limited to the groups automatically created by required software packages. Consult with the City if additional local user groups and/or accounts are required to meet the functionality of the PCS.

.1 Use the local administrator to install software for each machine.

.4 Domain/Administrators group shall be included as members of the highest privilege local groups that are required for each software package.

.5 Domain\Administrators group shall have all privilege levels on the running Plant SCADA project.

.6 Domain\Administrators group shall have Server Role of public and sysadmin for SQL Servers.

.7 The City will retain an account with administrator rights at all times for all hardware. These accounts will only be used as required on hardware under ownership of the integrator to maintain the treatment capacity and functionality of the plant.

.8 EI Group

.1 Users in the EI Group shall have view only access to all process equipment and alarms. The EI Group shall be able to remotely operate and acknowledge alarms for electrical equipment.

.2 No other user groups shall be able to remotely operate electrical equipment.

3.7 Workstation Installation

.1 Install Operator Workstations in control rooms as shown on the drawings.

.2 Install computer, monitor, mouse, mouse pad, and keyboard on the operator desk within the control room.

.3 Provide and connect network cabling as required.

.4 Organize all cabling in a neat and tidy fashion. Utilize tie-wraps to group and organize cabling.

.5 Upon installation of HMI and Historian clients, fully test all client application functionality. Correct all deficiencies to enable all manufacturer's functionalities.

.1 HMI clients should be set to automatically connect to the Primary HMI Server and automatically fail to the Secondary HMI Server if the Primary Server is not available.

.2 The HMI clients will have a manual mode to manually set which HMI Server they will connect to.

.3 Historian clients should be set to automatically connect to the Tier 1 Historian Server and automatically fail to the Tier 2 Historian Server if the Tier 1 Server is not available.

.4 The Historian clients will have a manual mode to manually set which Historian Server the will connect to.

.6 Disable local operating system firewalls.

.7 Configure Windows to auto login on boot up with a predefined Windows account.

.8 Plant SCADA client should automatically start with a view only user account.

.1 Upon a user logging out the predefined view only account will automatically login.

.9 Configure Print to PDF as the default printer for the autologin windows user account.

.10 Request and map City Drives to a network folder determined by the City

.1 Configure the drives to reconnect at sign-in for Operators.

.11 Install BGInfo and set to Auto Start on user login.

.1 A sample configuration of BGInfo currently used by the City will be provided for minimum requirement.

3.8 Contract Closeout

.1 Provide in accordance with Section 01 77 00.

END OF SECTION

NETWORK EQUIPMENT

1. GENERAL

1.1 Description

.1 A new Fibre network has been installed for the PCS. Configure the fibre networks as required and commission each network.

1.2 References

.1 Comply with latest edition of the codes and standards applicable and/or referenced in Section 40 90 00.

1.3 Submittals

.1 Submit data in accordance with Section 01 33 00 - Submittal Procedures.

.2 Submit updated network architecture drawings with tags and device configurations.

2. PRODUCTS

2.1 Ethernet Cables

.1 Provide for network connections as specified in Specification 26 05 20.

2.2 Ethernet Patch Cables

.1 Requirements:

.1 Cat-6, shielded.

.2 Jacket Colour: Blue.

2.3 Ethernet Switch – Control A, Control B, Server, and Supervisory Networks

.1 Requirements:

.1 Input voltage: 24 VDC, redundant dual inputs.

.2 Ethernet Ports:

.1 10/100/1000 BaseT(X), quantity as indicated on the drawings.

.2 100/1000 BaseSFP, quantity as indicated on the drawings.

.3 SFP modules:

.1 1000Base (1 Gigabit) SX, LC Connector, 0.5 km, minimum of four per switch, or as indicated on the drawings.

.4 Console port: USB.

.5 Supported industrial protocols:

.1 PROFINET.

.2 EtherNet/IP.

.3 Modbus/TCP.

.6 Redundancy Protocols:

.1 RSTP.

.2 MSTP.

.3 The switch must be capable of operating in a network that has connections to parallel redundant network paths.

.7 Management Protocols:

.1 RMON.

.2 RARP.

.3 DHCP Server/Client.

.4 DHCP Option 66/67/82.

.5 BootP.

.6 Syslog.

.7 LLDP.

.8 Security Protocols:

.1 HTTP.

.2 HTTPS.

.3 Telnet.

.4 SSH.

.9 Additional required supported protocols:

.1 IGMPv1/v2/v3.

.2 GMRP.

.3 GVRP.

.4 TFTP.

.5 SNTP.

.6 SMTP.

.7 SNMP Inform.

.8 SNMPv1/v2c/v3.

.9 IEEE 1588 PTPv2.

.10 IPv6.

.11 NTP Server/Client.

.10 Broadcast storm protection.

.11 Support for Port Trunking.

.12 Fanless design.

.13 DIN rail mount.

.14 Alarm relay dry contact: 1 A @ 24 VDC.

.15 IEEE 802.3x for Flow Control.

.16 Configuration via Web Browser.

.17 Operating temperature range: -10 to 60°C.

.18 Ambient Relative Humidity range: 5 to 95 percent (non-condensing).

.19 Enclosure: metal, IP30 protection.

.2 Manufacturer and Model:

.1 Moxa EDS-G512E-4GSFP with a minimum of four SFP-1GSXLC modules per switch.

.2 Moxa EDS-G516E-4GSFP with a minimum of four SFP-1GSXLC modules per switch.

.3 Or approved equal in accordance with B8.

.3 The use of Virtual Local Area Networks (VLANs) is not permitted.

3. EXECUTION

3.1 Network Configuration

.1 City of Winnipeg staff will determine IP address allocation and provide to the integrator upon request.

.2 The installed control network is arranged as a dual redundant ring. At each network panel, modify the fibre connections of each control network switch from parallel to series, provide fibre patch cables for each switch to switch link within the network patch panels to complete the trunked network topology.

.3 Configure the PCS network and all network switches to operate with the Turbo Ring V2.

.1 Network speed of 1Gb/s throughout the plant is required. Notify Contract Administrator immediately if there are warranty concerns regarding the installation of the Fibre network.

.2 For the control network only, use trunked communication mode on each switch to combine the bandwidth of the fibre into a single link.

.1 Rewire the patch cables on the control network of the existing network switches to achieve the trunked single ring as shown on the drawings.

.3 Connect existing PLCs to the ring created by the new PLC control network.

.4 Provide hardwired fault monitoring wired back to the local area PCS PLC for all network switches.

.5 Refer to the City's Automation Design Guide for an overview of each network.

3.2 Time Synchronization

.1 Enable time synchronization using SNTP

.1 Use 2048 as a default time interval unless a shorter time interval is required for switch specific functionality.

.2 Use the default gateway

3.3 Testing

.1 Refer to Section 40 99 91 and 40 99 93 for FAT, SIFT, SAT and SIT procedures.

.2 The installation will not be considered complete if there are errors even if communication is occurring.

.3 Use latest IEEE 802 standards for testing.

.4 Test disconnecting switches and system recovery as per turbo ring v2 functionality

END OF SECTION

APPLICATIONS SOFTWARE

1. GENERAL

1.1 Description

.1 Applications software is the software that provides functionality unique to this project, or that requires specific configuration from the standard software. All Applications software is to be developed or configured by the Contractor under this contract.

.2 This Work includes:

.1 Developing, testing, debugging, troubleshooting, documenting, training, and system start up of a complete and comprehensive Process Control System (PCS) comprised of distributed area PLCs and RIOs working with HMI and Historian Servers and operator workstations on a dedicated layered network to provide robust and reliable control system to run NEWPCC operations.

.2 It is important for the Integrator to have a strong understanding of the Wastewater industry and the process in each area of the plant. Review of contract documents, plant materials and existing logic will be required to gain the comprehensive understanding required to develop the Process Control System behaviour.

.3 Set up, configure, and develop all programs, databases, environments for a fully operable Process Control System as described in the drawings, specifications, and appendices.

.4 Modify and tune the control loops and software interfaces to create a cohesive control system that responds as the DCS based control loops including:

.1 Proportional, Integral, and Derivative (PID) response parameters for control loops

.2 Individual equipment performance

.3 Data communication between processors, workstations, and servers

.4 Operator and maintenance workstation displays

.5 Networking hardware configurations

.6 PLC and HMI configurations

.5 Provide temporary PLC programming as required during the switchover of each area. As equipment switches from the DCS to the PCS, the requirements of the controller may change. Provide all updates to programming as required to keep the NEWPCC plant functional for the operations staff to maintain the provincial license.

.3 The Contractor shall schedule the workshops specified in this section. Provide a minimum of three (3) weeks notice for a software design workshop.

.1 Integrate existing PLCs and vendor packages into the PCS. Where possible, use Included Projects to incorporate the existing PLCs within the PCS.

.1 Provide all PLC programming on existing and new PLCs to facilitate data exchange as required for the seamless integration of existing PLCs into the PCS. All monitoring, controlling, and alarming of existing PLCs shall be accessible from any PCS workstation after the integration.

.2 Replicate any existing HMI screens using the new graphics developed by this project in the PCS.

.2 Configure all network settings and configurations for reliable communication between devices. Where redundant paths are installed, provide configuration to allow for automatic fail-over to the redundant network paths.

.3 At anytime when equipment is controlled by the PCS, the Operators must have the means to control the equipment including automated control where required for control loops. Provide infrastructure and access to required setpoints, provide training to operators on use of PCS system.

.4 Refer to Appendix E for the associated City Standards. These City Standards are to be followed for all installations associated with this project.

.4 All application software and configuration developed or modified under this contract shall be owned by the City. The City may use this software for maintenance or development within NEWPCC or for other City Projects. The City may provide this application software to third parties to develop software on the City's behalf. All applicable intellectual property developed under this project shall be transferred to the City.

1.2 Software Design Workshops

.1 Location: City's Facility

.2 Objective: To allow for oversight and review of the Applications Software development.

.3 The Contractor shall prepare and distribute an agenda prior to the workshop.

.4 The contractor shall collaborate with the City in the workshop.

.5 The Contractor shall take minutes and distribute the minutes within two (2) days of the workshop.

.6 Workshops:

.1 PCS Configuration Workshop

.1 Occurrence: Once at beginning of project.

.2 Scope: Contractor shall review all Application Software that will be used in the project and how they will interface. The schedule for software development will be reviewed. Requirements for software development submittals will be discussed.

.2 PCS Pre-Commissioning Workshop

.1 Occurrence: Once after PCS setup and prior to demonstrating the PCS Configuration.

.2 Scope: Contractor to review the as-built Application Software setup, protocols and configuration. Distribute all information in advance to allow for discussion preparation.

.3 Standardized Logic Block Workshop

.1 Occurrence: As required to demonstrate and review all standardized logic blocks as specified in 40 94 43.

.2 Scope: Review and demonstrate the standardized logic blocks. Workshop can combine multiple standardized logic blocks together.

.4 Standardized HMI Graphic Workshop

.1 Occurrence: As required to demonstrate and review all standardized HMI graphics.

.2 Scope: Review and demonstrate the standardized HMI graphics including HMI layouts, equipment graphics, HMI navigation, user interface elements and trending. Workshop can combine multiple standardized HMI graphics together.

.5 Migration Area Preliminary Workshop

.1 Occurrence:

.1 Once per migration stage. After review of the PCNs and DCS logic but before significant development has started on the PCS development for the area.

.2 Once per PLC to be integrated. After review of the PCNs and PLC logic but before significant development has started on the PCS development for the PLC Integration.

.2 Scope: Review the process area requirements and gather input from the operations staff for switchover limitations. Go over major control loops and how the logic will be implemented in the PCS. Review network interface maps affecting the area.

.6 Migration Area Workshop

.1 Occurrence:

.1 Once per migration stage at the end of the PCS development for the area.

.2 Once per PLC integration at the end of the PCS development for the area.

.2 Scope: Review the switchover plans for the area and proposed sequencing of switchovers within the area and associated schedule. Review and demonstrate the developed logic. Review and demonstrate the developed HMI Screens. Review required communication between PCS and DCS before, during, and after migration. Review Operator control requirements and process downtimes during switchover. Review and demonstrate all required HMI functionality including alarming and

trending. Demonstrate all functionality as requested by the Contract Administrator and City.

.7 Migration Existing PLC and HMI Workshop

.1 Occurrence:

.1 Once per migration stage at the end of the PCS development for the area.

.2 Once per existing PLC integration at the end of the PCS development for the area.

.2 Scope: Review the switchover plans for the area and proposed sequencing of switchovers within the area and associated schedule. Review and demonstrate the developed logic. Review and demonstrate the developed HMI Screens. Review required communication between PCS and DCS before, during, and after migration. Review Operator control requirements and process downtimes during switchover. Review and demonstrate all required HMI functionality including alarming and trending. Demonstrate all functionality as requested by the Contract Administrator and City.

1.3 Submittals

.1 Submit the following in accordance with Section 01 33 00:

.1 Provide with 01 32 16 Construction Schedules an updated schedule based on software development.

.1 Every two weeks at the construction meeting, a lead developer that is familiar with the state of the software development will attend and share their screen to review the progress made since the previous software review.

.1 Provide demonstrations of the software upon request.

.2 Provide software to Contract Administrator upon request.

.2 Shop drawings:

.1 Outline of applications software to be developed.

.1 An overview description of each major software package and programming language or configuration method to be used for each different type of application.

.2 Schedule of each applications software.

.3 Standardized HMI Graphics

.1 Submit documented copies of the standardized HMI graphics including screen layouts, HMI navigation, facility overview, active alarm page, historical events, trends, faceplates, process area and user interfaces.

.2 Documentation shall at a minimum include all details to understand the use of the graphic including:

.1 Description

.2 Animation(s)

.3 Colour(s)

.4 HMI Faceplates

.1 The faceplates shall be developed along side the standardized function blocks for seamless interfacing of the logic and faceplates.

.5 User Interactions

.6 User Interaction Response

.7 Trend Screens

.8 Active Alarms

.9 Historical Events

.10 Headers and Footers

.11 Dashboard

.12 See the HMI Layout and Animation Plan in Appendix E for additional requirements.

.3 Demonstrate all HMI graphics

.4 Software Design Submittal

.1 Preliminary Design

.1 Submit a HMI and PLC design criteria prior to initiating programming which includes:

.1 The general PLC function blocks derived from the PCN and the latest DBDOC logic.

.2 The general PLC program structure.

.3 PLC memory map in broad categories (address ranges).

.4 The programming languages to be utilized.

.5 HMI Layout and animation criteria

.2 25% Design

.1 Submit a 25 percent complete submittal for each area, including Software Logic and HMI screens in pdf and native format.

.2 Include updated interface maps in excel and pdf format following the templates found in Appendix G meeting the criteria of the automation design guide.

.3 The primary purpose of this submittal is to ensure that the methodology being utilized is as per requirements prior to bulk portion of work being completed. At this point, copies of code for similar pieces of equipment should not be completed.

.4 A plan for all HMI screens in the area including a rough layout shall be included. With at least 3 unique and distinct screens at 99% level of design. The three screens at 99% level of design shall not be copied and pasted of each other or of previous areas of the plant.

.5 The 25% Design submittal shall be resubmitted for review after incorporating all comments.

.3 99% Design

.1 Submit a 99 percent complete submittal for each area a minimum of 20 working days prior to the FAT, including:

.1 Complete software logic and HMI screens in pdf and native format.

.2 PLC database and HMI interface data map in excel and pdf format.

.3 Third party interface list in excel and pdf format.

.4 FAT and SIFT procedure (see Section 40 99 91, FAT and SIFT Procedures for requirements).

1.4 Quality Assurance

.1 Provide in accordance with Section 01 43 00 and as specified.

1.5 Delivery, Storage and Handling

.1 Provide in accordance with Section 01 66 10 and as specified.

1.6 Warranty

.1 The Contractor shall warrant that all materials and equipment furnished under the contract are in good working order, free from defects, and in conformance with system specifications. All installed equipment shall conform to the manufacturer's official published specifications. The warranty shall begin at the system acceptance date and remain in effect for a period of one years from that date. The Contractor shall agree to repair, adjust, and/or replace (as

determined by the Contract Administrator to be in its best interest) any defective equipment, materials, or other parts of the system at the Contractor's sole cost. The Owner will incur no costs for service or replacement of parts during the warranty period of one year. All third party warranties shall be passed through from the Contractor to the Owner.

.2 The Contractor shall warrant that all application software developed for the project shall be free from defects leading to unintended operation of the plant equipment. The application software will be based on the Process Control System requirements and the existing DCS functionality to replicate the existing control system. The warranty shall begin at the system acceptance date and remain in effect for a period of one years from that date. The Contractor shall agree to repair or adjust the application software if defects are found. The Contractor shall expedite the repair or adjustments to the level of severity to ensure no additional damages occur to the plant, personnel, or treatment capacity occur. All repairs or adjustments will not take longer than one (1) calendar month to complete from the time of notice.

.1 The system acceptance date is unique for each stage in the migration plan and covers the work developed in that stage.

.3 The Contractor shall warrant that the system will function in accordance with the manufacturer’s published technical description guide.

.4 The City may make documented and tracked changes to add or modify logic based on operational requirements or self-correct any issues instead of making warranty claims. These adjustments to the program will not impact the warranty, and the new item to each program is not covered under the warranty.

2. PRODUCTS

2.1 PLC Software Development

.1 EcoStruxure Control Expert shall be used to develop all PLC software.

2.2 SCADA Setup

.1 Plant SCADA Project:

.1 Cluster Name: NEWPCC

.2 System wide parameters shall be defined in the Parameters section under Setup

.3 Parameters specific to a group of Servers or clients shall be defined in profile except where parameters are required to be defined in the local .ini file.

.4 Parameters specific to an individual machine shall be defined in local .ini

.5 In the HMI Server profile set the following parameters:

.1 [OFSOPC] ReadAfterWrite = 1.

2.3 PLC Program Requirements

.1 The PLC system will provide all functionality of the DCS controller being replaced including:

.1 Manual controls

.2 Automatic controls

.3 Alarm annunciation

.4 Continuous control loops

.5 Redundancy

.2 Refer to the Automation Design Guide for PLC Programming Requirements.

.3 Additional requirements for PLC and PLC program in Specification 40 94 43.

.4 PLCs shall be programmed with Function Blocks.

.5 All process control shall be implemented on the PLC.

.1 No HMI logic shall control the process.

.2 PLC function shall remain undisturbed if connection to the HMI lost.

.6 Format Function Block layouts into sheets the size of 11x17 inch paper for ease of printing. Group Function Blocks by logical control groups. Use landscape sheet orientation.

.7 Break PLC program into sections based on control loops or parallel process trains.

.8 Break PLC program sections into subsections based on individual equipment operation.

.9 Do not use indirect addressing and non-visible data links.

.10 All timer settings, set points, and miscellaneous adjustments will be determined during application software development or plant start up. All settings and adjustments shall be easily made through the programming software.

.1 Set as configured in DCS / S+ system. Follow Composer (S+) function code concept where possible. Submit as Shop Drawing for Contract Administrator's review.

.11 Unless otherwise indicated, reset and start running all strategies following a power interruption. Software signal selectors and mode memories which are toggled or advanced by momentary signals, are required to retain their last setting through power outages, except as indicated otherwise.

.12 Logic outputs of function blocks shall only access Inputs and Outputs

.1 Accessing function block's public variables are not allowed.

.13 All function blocks shall be connected by visible Link. Where this is unable to be achieved, this shall be thoroughly documented in a manner that it cannot be missed. This documentation shall be consistent throughout the project. Documentation of non-visible links to be approved by the Contract Administrator on a case by case basis.

.14 Limit cross over links to avoid clutter in the code. Simplify links as much as possible for ease of reading and maintenance.

.15 All Bool variables shall be named based on the variable when the value is 1 being true

.16 Function Blocks shall be connected/placed in a way to minimize execution and propogation delay.

.17 Documentation:

.1 Overall process description, include relevant description on associated sheets3

.2 Hyperlinks to allow for clicking and following of signals

.3 Physical hardware arrangement notes including equipment tags and IO cards in use

.4 Signal names

.5 Communication parameters and signals

.6 Animation Table

.7 Associated HMI screens

2.4 HMI Software Requirements

.1 HMI Server Software

.1 Each HMI Server installation shall include:

.1 I/O server

.2 Report server

.3 Alarm server

.4 Trend Server

.5 OPC Server

.6 Modbus Driver

.7 DNP3 Driver

.8 Ethernet IP Driver

.2 Manufacturer and Model:

.1 Aveva Plant SCADA

.2 This product was standardized by the City via RFP 756-2013. No alternates or substitutes will be accepted.

.2 General

.1 The Contractor shall develop the HMI design to allow for monitoring and control of the plant. HMI screens and layouts will be based on the existing DCS screens as a guide. Refer to the City's HMI Layout and Animation Plan for requirements and guidelines for PCS screen development.

.1 If there is a discrepancy between the DCS screens and the HMI Layout and Animation Plan, submit an RFI to the Contract Administrator for guidance, clearly show the discrepancy using visuals where needed.

.2 Provide navigation such that from the main screen:

.1 Any process area can be reached in one click of the mouse

.2 Any control loop can be reached in two clicks of the mouse

.3 Any individual device can be reached in three clicks of the mouse.

.3 Provide area to area navigation elements to allow for complete circular navigation through all process areas at the process area level.

.4 Maintain consistent graphics throughout the project.

.5 Maintain consistent layouts throughout the project.

.6 Layout the screens to best depict the actual process occurring while maintaining readability.

.7 Develop Event Journal for operator actions, the following will be included but not limited to journal log, user logon, time, change of process values, setpoints, and digital signals status change. The journal to log show current values to new values.

.8 Develop help screens and onscreen directions to provide additional information to help the operations staff understand the control options where complex operations are required.

.9 Where possible, design overview displays similar to the physical layout of the facility. The perspective to the physical layout should be from the local main control room.

.10 Provide operators access to all current setpoints available on the DCS. Limit set point ranges to match the DCS operation. Ensure setpoint permissions for Operators and The City AICG are maintained.

.11 Display all monitored values. Graphic context shall update based on measured values

.3 Loss of Communication Sensing by the control system:

.1 Monitor the health of each PLC at the plant including vendor supplied PLCs which are on the Control Network by directly monitoring the PLC systems' words. Display their various status parameters such as low battery, Primary/Secondary, Running/Not Running, and communications (normal/fail) conditions

.2 Generate alarm if communication with the hot PLC fails or the hot PLC is not running for 60 seconds

.4 PLC hardware alarms that are available from the PLC's system words shall be read by Plant SCADA directly from the PLC's system words without the use of intermediate PLC logic.

.5 Configure the servers as primary/secondary redundant wherever possible. Provide functionality so the servers may be manually set as the primary or secondary server.

3. EXECUTION

3.1 Testing

.1 Refer to Section 40 99 91 and 40 99 92 for FAT, SIFT, SAT and SIT procedures.

3.2 Tuning

.1 Attain optimum system response and performance by tuning hardware and software components. Include the following:

.1 Poll block frequency and phasing.

.2 Point scan frequency.

.3 Trend scan frequency.

.4 Modbus RTU/TCP, LAN

.5 Page change linkage.

.6 Plant Monitoring, Reporting and Data Logging.

.7 Regrouping of PLC points and files to optimize the quantity of blocks transmitted to process computers.

.8 Elimination of network transmission errors and time-out occurrences.

.2 Optimize PLC, PC, and network software to impose minimum loads on the equipment, with the following priorities:

.1 Minimal network traffic.

.2 PC processing.

.3 PLC processing.

.4 Network processing.

3.3 Reports

.1 Provide reporting capabilities within the PCS to match the reporting on the existing DCS and the Hauled Liquid Waste HMIs.

.2 City will provide templates for reports upon request.

.3 For data reports with Aveva Historian as data source, The Integrator shall provide historian database credential for City to query database remotely.

.1 These credentials shall be provided once the Historian is set up. The City shall be able to query the database and make reports while the project is still in construction.

.4 For data reports with Plant SCADA as data source, generated data reports shall be saved at local drive and remote network location specified by the City in parallel.

.1 If there is a network interruption, the local copy can be used for data recovery. Integrator shall to produce a sample report at initial Plant SCADA project setup.

.2 Provide the City with sample reports to demonstrate generating reports with Plant SCADA data for all datatypes. Provide clarifications and demonstrations as required to assist the City in setting up their reporting.

.5 The City may add and commission reports as Operations requires in areas handed over to the City.

.6 The City may directly connect to PLCs for data reporting requires in areas handed over to the City.

3.4 Existing PLC Integration

.1 Integrate the existing PLCs identified in the migration plan into the main PCS.

.2 Include all screens into the main PCS and add the available alarms, IO points, and navigation to create a seamless transition when interfacing with the existing PLC equipment.

.3 Commission all functionality and interfaces of the existing PLCs to show the functionality is maintained.

3.5 Software Copies

.1 Use and keep up to date version control application to save and track the program versions and the schedule of when each version is active in the plant. Provide the version control schedule and any historical application versions upon request of the Contract Administrator.

.2 Integrator to provide copies of all applications software to the Contract Administrator at beginning of switchover.

.1 Provides live copies daily to the Contract Administrator during the switchover for each day that the applications are modified.

3.6 Software Repairs

.1 When on-site commissioning and integration has begun, supply continuous services to effect start up, fine tuning, and removal of deficiencies in the software or data. Complete the integration and repairs within 1 month or less. If at the end of 1 month the software is not completely correct, then repair services may be provided by the Contract Administrator or an

agent designated by the City and the actual cost incurred may be deducted from the Lump Sum Contract Price.

3.7 Training

.1 Film and record screens of at least one occurrence of each training type. Edit videos to show relevant information with overlays as required, remove any distracting contents. Edit videos to be concise. Submit training videos for review. Provide City with copies of each training video on USB.

.2 Training timing to be coordinated with the Contract Administrator.

.3 Management Seminar

.1 Occurrence: Once

.2 Length: 1 day

.3 Location: NEWPCC

.4 Objective: Walk through of new systems. Provide high level understanding of application software for monitoring and controls. Demonstrate how to generate custom reports and trends.

.4 Operations Training:

.1 Occurrence: Four times for each area

.2 Length: Half Day

.3 Objective: Walk through new system. Demonstrate each type of control loop. Review each process area in depth demonstrating typical operation of each area. Respond to questions as required. Review of new alarm management system. Provide all training required to operate PCS systems. Make time available for questions and provide answers.

.4 Training must occur before handing area over to City for operation.

.5 Electrical and Instrumentation Maintenance Training:

.1 Occurrence: Three times

.2 Length: Two days

.3 Objective: Walk through new hardware installed. Review drawings and how information is presented. Visit each new panel and show the installation and additional field wiring added. Provide all training required to troubleshoot and fix hardware or wiring issues.

.6 Software Maintenance Training:

.1 Occurrence: Two times

.2 Length: Five days

.3 Objective: Review new systems. Review programming methodology. Review standardized logic and HMI graphics. Run a full day tutorial on creating a new compound control loop using the standardized blocks and HMI graphics in a style that matches existing system. Review in detail the PLC control logic and documentation for each area.

3.8 City Access

.1 To facilitate and maintain the plants treatment capabilities, the City shall have super user administrative access to all live system component at all time. Submit system administrative user accounts and passwords in sealed envelopment to City with in 5 business days of creation or change.

.1 A Field Instruction will be provided to the Integrator each incident the City is required to modifying the working applications to maintain plant functionality.

.2 The Integrator may maintain the City's changes or can implement their own correction.

3.9 Contract Closeout

.1 Provide in accordance with Section 01 77 00.

END OF SECTION

FAT AND SIFT PROCEDURES

1. GENERAL

1.1 Description

.1 Factory Acceptance Tests (FAT) and System Integration Functional Tests (SIFT) for the Process Control System (PCS)

.2 Perform FATs at the Contractor's facility before shipping to site. Demonstrate to the Contract Administrator that the PCS, PLC, and/or RIO satisfies the project requirements as documented in the specifications, drawings, and appendices.

.3 Perform SIFTs as well at the Contractor's facility before shipping to site. Demonstrate to the Contract Administrator that the integration of all PCS components including PLCs, HMI software, automation and instrument components, electrical system components, vendor packaged systems, and other miscellaneous subsystems.

.4 The FAT and SIFT testing shall be arranged such that up to four (4) City of Winnipeg representatives can attend each testing session at the Contractor shop at no additional charge.

.1 If FAT and SIFT testing occurs further than 100 km outside of Winnipeg:

.2 Provide hotel accommodations, including a room for each representative, for each day of testing.

.3 Allow for travel costs including milage and/or flight costs for each representative

1.2 Submittals

.1 Submit the following in accordance with Section 01 33 00:

.2 Test Plan

.1 FAT Plan

.1 Prepare and submit to the Contract Administrator two months prior to scheduled testing for review and approval.

.2 The FAT Plan shall at a minimum include:

.1 Scope of test including all components under test. This shall include hardware, software, programming, configuration, documentation, etc.

.2 Quality of construction, including visual inspection, wiring, labelling, conformance with project requirements, comparison to shop drawings.

.3 Review performance of application software and related functions.

.4 IO Testing

.5 Operator Interface Functionality Testing

.6 Review of programming, graphic displays, and database completeness.

.7 Review of software and firmware versions

.8 Review of test performed by the Contractor prior to the FAT.

.9 Demonstration plan and schedule for all items not able to be covered by the FAT.

.2 SIFT Plan

.1 Prepare and submit to the Contract Administrator two months prior to scheduled testing for review and approval.

.2 The SIFT Plan shall at a minimum include:

.1 Scope of tests, including hardware, software, application software, configuration, documentation, etc.

.2 List of all interfacing systems to the items under test.

.3 Test and demonstration methodology to each interfacing system.

.3 The Contractor shall provide the facility and tools required to perform all FAT and SIFT activities.

.4 Submit the specific FAT and SIFT procedures a minimum of 2 weeks prior to the respective test date.

.5 Contractor shall conduct a full in-house test before FAT and submit test report to Contract Administrator.

.1 FAT and SIFT will be rescheduled if the test before FAT are failed.

2. PRODUCTS (NOT USED)

3. EXECUTION

3.1 FAT

.1 Required Documentation

.1 Provide the following documentation on printed copies at the test facility.

.1 Process Control Narrative

.2 DCS Logic

.3 P&IDs

.4 HMI Layout and Animation Plan

.5 DCS Screens

.6 I/O List

.7 Control System Architecture Drawings

.8 HMI Architecture

.9 As-built shop drawings

.10 Pre-FAT reports

.11 O&M Manuals

.12 PLC and HMI Program documentation

.13 Software licence information

.14 CPU, Network, and Server loading reports

.15 Hardware and Software configuration parameters.

.2 Test Procedures:

.1 The Tests shall include at a minimum:

.1 Control Panel Inspection

.1 Visual Inspection

.2 Verification of Panel Layout

.3 Warning and nameplate labels

.4 Verification of component tags

.5 Cabinet internal grounding

.6 Verification of component part numbers

.7 Cabinet Lighting and fans

.8 Spare Capacity

.2 Wiring Inspection

.1 Wire Tags

.2 Fusing and Circuit Breakers

.3 Segregation of different wirings according to shop drawings,

.4 Wire duct loading,

.5 Random wire crimp inspection and random manual wire pull test,

.6 Power supply and distribution.

.3 Start-up testing and general Control System function testing:

.1 Cold start up,

.2 On-line change to configuration/program,

.3 Controller cycle time,

.4 Display call-up time,

.5 Value update time,

.6 System load,

.7 Time synchronization check,

.8 User log-on security and security levels,

.9 Back-up power supply operation,

.4 System alarm testing:

.1 Alarm philosophy and acknowledgment,

.2 Power supply failure alarm,

.3 Priority levels of alarms,

.4 System diagnostic alarms,

.5 Network alarms,

.6 Wire break, short circuit, out of range, earth fault,

.7 Watchdog,

.8 Electrical fault and status alarms.

.5 Hardware redundancy testing:

.1 PLC redundancy,

.2 Power supply redundancy,

.3 Server redundancy,

.4 Control network redundancy.

.6 Programming/Maintenance workstation functionality testing:

.1 FDT/DTM function,

.2 Data editor,

.3 Debugging tool,

.4 PLC simulator,

.5 Trending tool,

.6 Modifying the program in Run mode,

.7 Import/Export function,

.8 Operating system update utility,

.9 Report generation.

.7 HMI testing:

.1 Symbols for process equipment,

.2 Colors,

.3 Process flow direction,

.4 Hierarchies and linking displays

.5 Dynamic changes of colors, sub-pictures and data entry points,

.6 Density of information,

.7 Static text and dynamic changes.

.8 Device interface HMI testing:

.1 The Device faceplate shall be checked as follows to confirm required appearance and functionality:

.1 Functionality, service text, range,units,etc.,

.2 Link to physical or communications I/O point/address,

.3 Related process group display,

.4 Related trends.

.2 Color changes for dynamic objects, for example, valves, motors bar graphs, etc shall be checked.

.3 Location of tag targets on the graphics shall be checked to be in correct location.

.4 Alarm assignments: Type, value, priority, etc. shall be checked.

.5 Alarm E-mail notification shall be checked (if practicable).

.9 Hardwired I/O function testing:

.1 Full functionality of I/Os shall be tested by simulation device or simulation software.

.2 See Appendix H for loop check test form templates.

.3 The most complete I/O testing method is to connect simulation devices to field terminals.

.4 If the above method is not possible, then simulation devices may be connected to I/O modules, or I/O modules software simulation may be used.

.5 I/O simulation software shall provide I/O simulation for Schneider M580 PLCs.

.10 Bus device function testing:

.1 Full functionality of bus devices shall be tested by simulation device or simulation software.

.2 The most complete bus device testing method is to connect simulation devices to fieldbus network.

.3 If the above method is not possible, then simulation software may be used.

.11 Bus interface link testing:

.1 Selected bus segments which are agreed upon, should be built up and tested with all segment devices.

.2 This test should cover interoperability of the Control System and the device.

.3 Signals related to segments not built up should be simulated.

.4 All relevant segment documents should be reviewed.

.5 Functionality of bus protection devices shall be tested.

.3 Record all defects, non-compliance items, or incomplete work. Include description of issue, resolution, and date completed.

.4 All issues shall be rectified during the FAT if feasible.

.5 Documentation

.1 Provide completed checklist including measured values for signing upon the completion of the FAT. Include a list of the defective, non-conformance, or incomplete work items.

.6 FAT Completion:

.1 The FAT shall be considered complete when all required functions have been tested and verified according to FAT plan.

.2 Any tests that could not be completed during the FAT shall be completed at Site Acceptance Test (SAT) during pre-commissioning activities.

3.2 SIFT

.1 Required Documentation

.1 Provide the following documentation on printed copies at the test facility.

.1 Process Control Narratives

.2 DCS Logic

.3 P&IDs

.4 HMI Layout and Animation plan

.5 DCS HMI screens

.6 I/O List

.7 Control system architecture

.8 HMI architecture

.9 PLC and HMI program documentation

.10 Associated vendor panel documentation.

.2 Test Procedure

.1 Communication links to subsystems (vendor package control system, Electrical systems and other subsystems) shall be tested.

.2 If actual connection to all Electrical systems is not possible, one typical connection to the electrical equipment (VFD, MCC, Power meter, etc.) shall be tested.

.3 If actual connection to subsystem is not possible, subsystem simulation device or software shall be used.

.4 Full functionality of link shall be tested as far as practicable.

.5 Link failure effects and redundancy functions shall be tested.

.6 Control System HMI functionality shall be tested for all control systems, electrical systems and other subsystems.

.7 The initial data, setpoints and settings shall be tested during the redundancy check.

.8 Interlocks and complex function testing:

.1 Complex functions, interlocks and operating modes shall be tested after the I/O tests to satisfy requirements of Process Control Narrative and DCS Logic documentation.

.9 Process simulation:

.1 Test and validate the process plant operation by using process and equipment models created with process simulation software.

.3 Record all defects, non-compliance items, or incomplete work. Include description of issue, resolution, and date completed.

.4 All issues shall be rectified during the SIFT if feasible.

.5 Documentation

.1 Provide completed checklist including measured values for signing upon the completion of the SIFT. Include a list of the defective, non-conformance, or incomplete work items.

.6 SIFT Completion:

.1 The SIFT shall be considered complete when all required functions have been tested and verified according to SIFT plan.

.2 Any tests that could not be completed during the SIFT shall be completed at Site Acceptance Test (SAT) during pre-commissioning activities.

3.3 Contract Closeout

.1 Provide in accordance with Section 01 77 00.

END OF SECTION

AUTOMATION TESTING AND COMMISSIONING

1. GENERAL

1.1 Description

.1 Provide all testing and commissioning for and Process Control System (PCS) components necessary to confirm the functional performance for the equipment and systems.

.2 Perform a Site Acceptance Test (SAT) at site prior to commissioning to demonstrate that the installation satisfies the project installation requirements and applicable codes and standards.

.3 Perform a Site Integration Test (SIT) at site to demonstrate that all the control system components are fully integrated and working together as specified in the project documents as required for complete PCS functionality.

.4 Testing is performed to:

.1 Demonstrate and document that the entire PCS is operating in accordance with the design requirements;

.2 Contribute to the safe and reliable operation of the plant; and

.3 Provide a baseline result for routine maintenance of system and related components.

1.2 Submittals

.1 Submit the following in accordance with Section 01 33 00:

.2 Submit test plans and schedules a minimum of two months prior to testing.

.3 SAT Plan

.1 Contractor shall submit the SAT plan for Contract Administrator approval.

.2 The SAT plan provided by Contractor shall include:

.1 Scope of the test, including hardware, software, programming, configuration, documentation etc.,

.2 Hardware, including construction, visual inspection, wiring, labeling, agreement with shop drawing requirements and acceptance criteria,

.3 Software, including the loaded application and HMI software and the configuration,

.4 Hardware and software configurations shall comply with the FAT and SIFT results,

.5 FAT and SIFT functional tests to be re-performed after installation,

.6 Tests that were not completed during the FAT/SIFT and any open FAT/SIFT punch list item,

.7 Tests to be performed after loop checks such as interlock, logic and sequence check,

.8 Security of Control System network (fire wall rules and network segmentation).

.4 SIT Plan

.1 Contractor shall submit the SIT plan for Contract Administrator approval.

.2 The SIT plan provided by Contractor shall include:

.1 Scope of the test, including hardware, software, programming, configuration, documentation etc.,

.2 Tests to confirm interoperability of systems involved,

.3 Any functional test to be re-performed after interface to package control system.

.5 Supplement submittal documentation as needed to provide adequate records of testing and commissioning activities in accordance with accepted industry practice.

.6 Issue submittals for Contract Administrator review and acceptance in accordance with the project schedule as defined herein and in a timely manner to ensure that all required documentation is in place prior to the commencement of any testing or commissioning activities.

.7 Coordinate the submittals detailed in other sections of the specifications with the requirements defined in this section to achieve a complete set of documentation without overlap or gaps.

2. PRODUCTS

2.1 TESTING EQUIPMENT

.1 Typical test equipment to perform test, configuration, calibration and loop checks include but are not limited to:

.1 Digital multimeter;

.2 Portable pressure calibrator;

.3 Dead weight tester;

.4 Precision pressure gauge;

.5 Temperature calibrator;

.6 Temperature calibration bath;

.7 Standard temperature sensor and meter;

.8 Loop calibrator;

.9 Hand-held oscilloscope;

.10 Ethernet fiber and copper network tester;

.11 Profibus PA and DP segment tester;

.12 Profibus PA hand-held field communicator;

.13 HART hand-held field communicator if applicable;

.14 Two way radio.

2.2 Testing Equipment Calibration

.1 Contractor shall have a calibration program which assures that all applicable test instrumentsare maintained within rated accuracy.

.2 The firm providing calibration services shall maintain up-to-date instrument calibrationinstructions and procedures for each test instrument calibrated.

.3 Instruments shall be calibrated in accordance with the following frequency schedule:

.1 Field instruments analog and digital: 12 months maximum;

.2 Laboratory instruments: 12 months maximum;

.3 Leased specialty instruments: 12 month maximum.

.4 Dated calibration labels shall be visible on all test equipment.

.5 Calibrating standard shall be of better accuracy than that of the instrument tested.

3. EXECUTION

3.1 General

.1 The testing and commissioning activities described herein applies to all components and systems that make up the entire Process Control System for the NEWPCC DCS Migration.

.2 All test reports shall include:

.1 The date,

.2 The name, title, and company of the personnel performing the test. Document any required qualifications held.

.3 The conditions during the test as applicable (weather, process conditions, etc.)

.4 The name, title, and company of the representative observing the test.

3.2 Qualification of Personnel

.1 The personnel performing the field tests and commissioning shall be experienced and thoroughly familiar with the apparatus and systems being tested and commissioned. They shall be capable of conducting the tests and commissioning activities in a safe manner, analyze the test data and make a decision on operability of specific equipment and system.

.2 The Contract Administrator shall witness the testing and commissioning.

.3 City of Winnipeg representatives shall observe the testing and commissioning.

3.3 Commissioning Preparation

.1 Carry out all testing and pre-commissioning activities as required herein.

.2 Coordinate all pre-commissioning schedules with the Contract Administrator.

.3 Keep accurate records of all works completed and submit final documentation for each pre-commissioning activity as and when completed for each portion of the project. Certify all final submissions as accurate and true.

.4 Review FAT and working copies of the construction documents to verify the condition is acceptable and suitable for commissioning.

.5 Prepare Commissioning Plan.

.6 Submit Commissioning Plan for review and approval by contract administrator.

.7 Coordination and schedule and manufacturer's assistance as required.

.8 Provide any manufacturer's instructions in the commissioning plans.

.9 Loop Checks

.1 Perform loop checks to verify proper operation of all loops prior to commissioning.

.2 Check Documentation

.3 Visually inspect the installation

.4 Verify the loop functionality

.10 Instrument system tests

.1 Demonstration of operation of all equipment in all control modes as documented in the Process Control Narratives and DCS Logic.

.11 SAT

.1 Perform the SAT to demonstrate proper functionality of the system at final installation.

.2 Check of Hardware/Software inventory;

.3 Mechanical inspection;

.4 Wiring and termination inspection;

.5 System energization;

.6 Checking hardware redundancy and diagnostic;

.7 Checking operator interface;

.8 I/O test;

.9 Verification of the device network interfaces;

.10 Function check; and

.11 .Performing the tests which could not be completed during the FAT.

.12 SIT

.1 Perform the SIT to demonstrate the functionality and compatibility of all interconnected systems at final installation to achieve the Process Control System required performance The SIT consists of testing the communication and interaction between the PCS sub-systems or with other systems, such as mechanical package control systems, to ensure desired functional performance. The SIT shall be performed after the SAT for each system/sub-system has been successfully completed.

.2 Mechanical inspection;

.3 Testing communication links;

.4 Checking operator interface;

.5 Testing Hardwired I/O;

.6 Functional tests; and

.7 Performing the tests that could not be completed during the SIFT.

.13 Produce test reports for all performed tests and results and provide in the O&M Manuals.

3.4 Commissioning

.1 Carry out all testing and commissioning activities as required herein.

.2 Coordinate all commissioning schedules with the Contract Administrator.

.3 Keep accurate records of all works completed and submit final documentation for each commissioning activity as and when completed for each portion of the project. Certify all final submissions as accurate and true.

.4 Reviewing commissioning plan;

.5 Reviewing pre-commissioning reports to verify acceptable condition for commissioning phase;

.6 Perform Loop Functional Checks;

.1 See Appendix H for loop check test form templates.

.2 Demonstrate equipment functionality as described in the Commissioning Plan. Minimum requirements shall demonstrate all functionality in the Process Control Narratives and DCS Logic.

.3 For analog signals use 4-20 mA sources to simulate the transmitter signal. For Profibus instruments, use a handheld communicator connected at the transmitter to simulate the signal. For discrete signals, simulation includes the use of a jumper or lifting a wire/opening a fuse in the circuit.

.4 Simulate values at multiple points (in both increasing and decreasing directions) of transmitter span (0, 25, 50, 75 and 100%) to confirm the sensor/transmitter, HMI and any other indicators all agree.

.5 Simulate values above and below range to confirm failure reaction in PCS. Simulate a sensor/transmitter failure and/or disconnection to verify the failure reaction in PCS.

.6 Reconnect the transmitter to verify the device is automatically and correctly communicating with PCS. Final alarm and control set point adjustments as necessary;

.7 Interlock Verification

.1 Force each interlock initiator, one at a time, and confirming that all interlock actions occur at the proper trip points in accordance with the Process Control Narratives and DCS Logic.

.8 Sequence Logic Check

.1 Demonstrate all sequence logic and control loops as described in the Process Control Narrative and existing DCS Logic. Force or simulate each sequence logic or control loop initiator, one at a time, and confirming that all logic actions occur properly in accordance with the Process Control Narrative and existing DCS Logic.

.9 Adjustments of controller’s PID value (Loop Tuning) as necessary;

.10 Verification of complex control schemes;

.11 Monitoring the PCS diagnostic alarms;

.12 Monitoring the control system performance;

.13 Commissioning of analyzers, sample handling systems and other special instruments;

.14 Produce Commissioning report documenting the commission demonstrations, including tests and demonstrations performed, measured values, system response, and tuned values.

3.5 Contractor Representative

.1 Designate and furnish one or more Contactor personnel to coordinate and expedite all testing and commissioning activities and documentation functions.

.2 Contractor representative(s) to coordinate all testing and commissioning works carried out by specific equipment vendors in accordance with the commissioning planning and schedules submitted by the Contractor.

.3 Representative(s) to attend all meetings concerning the commissioning function as may be requested by the Contract Administrator. Representative(s) to be available at all times during the testing, pre-commissioning, commissioning and performance evaluation phases of the project.

3.6 Contract Closeout

.1 Provide in accordance with Section 01 77 00.

END OF SECTION