A1 SIZE - 594mm x 841mm

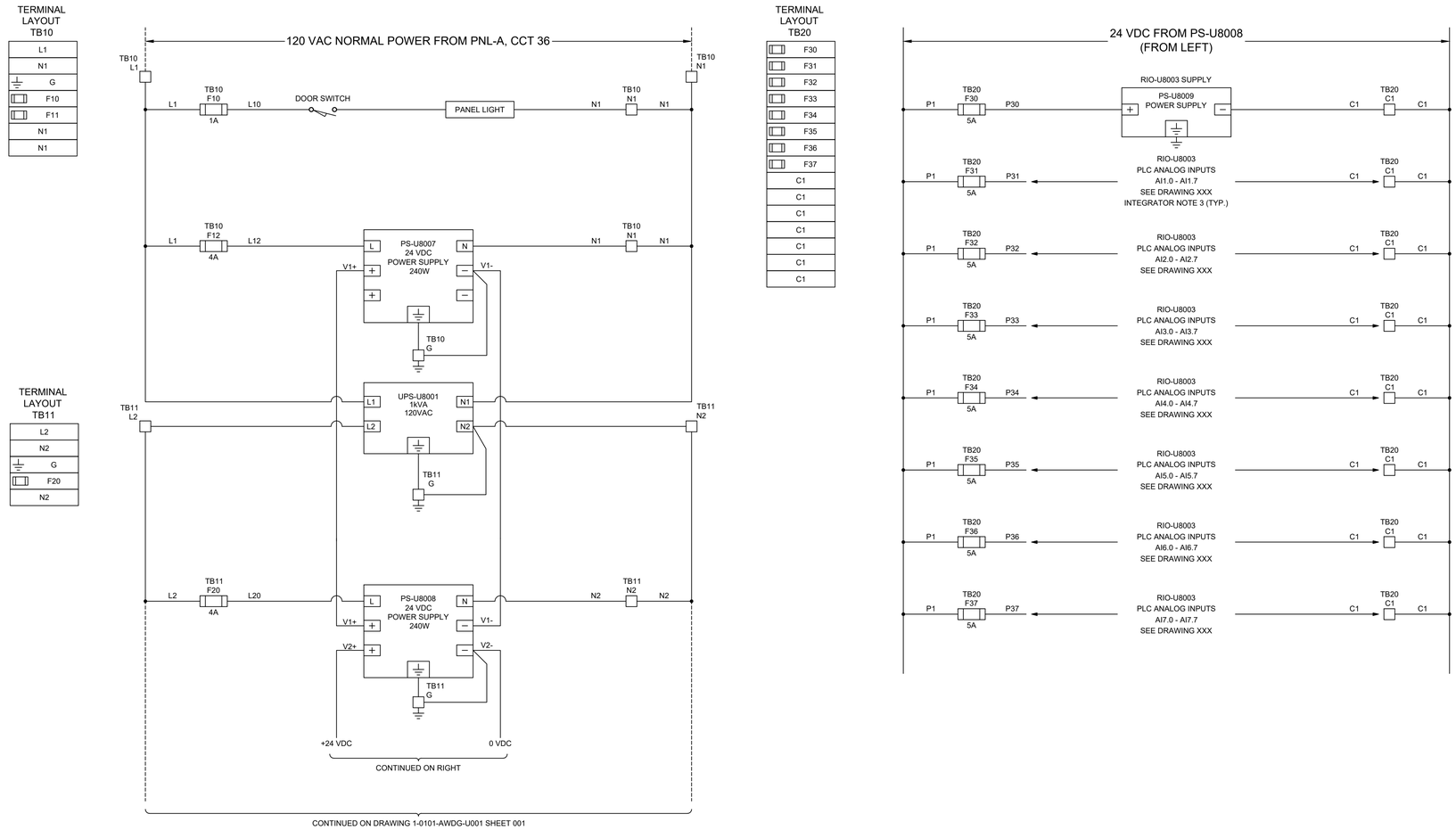


## FUSE SCHEDULE

| M | IDENTIFIER | SIZE | RATED CURRENT |
|---|---|---|---|
| TB10 | F10 | 5x20mm | 1A |
| | F11 | 5x20mm | 4A |
| TB11 | F20 | 5x20mm | 4A |
| TB20 | F30 | 5X20mm | 5A TD |
| | F31 | 5X20mm | 5A FA |
| | F32 | 5X20mm | 5A FA |
| | F33 | 5X20mm | 5A FA |
| | F34 | 5X20mm | 5A FA |
| | F35 | 5X20mm | 5A FA |
| | F36 | 5X20mm | 5A FA |
| | F37 | 5X20mm | 5A FA |

## POWER CONSUMPTION SCHEDULE AT 24 VDC

| LOAD | QTY. | CURRENT (mA) | SUBTOTAL (mA) |
|---|---|---|---|
| DISCRETE INPUTS | 0 | 2.5 | 0 |
| DISCRETE OUTPUTS | 0 | 50 | 0 |
| ANALOG INPUTS | 48 | 20 | 960 |
| ANALOG OUTPUTS | 20 | 20 | 400 |
| X80 POWER SUPPLY MODULE | 3 | 1650 | 4950 |
| DUAL RING SWITCH | 0 | 250 | 0 |
| TOTAL | | | 6310 |

GENERAL NOTES:
1. ALL FUSES ARE TO BE PROVIDED. IN ADDITION, TWO SPARES OF EACH FUSE SIZE SHALL BE PROVIDED.

INTEGRATOR NOTES:
1. SEE SPECIFICATION 40 90 00 FOR SCOPE.
2. INTEGRATOR SCOPE IS PANEL FABRICATION.
3. INTEGRATOR TO UPDATE DRAWING NUMBERS WITH AS BUILT DRAWING NUMBERS.

CONTRACTOR SCOPE:
1. SEE SPECIFICATION 26 05 10 FOR SCOPE.
2. CONTRACTOR SCOPE IS INSTALLATION OF PANELS AND POWER FEEDS TO PANELS

| REF. NO. | DRAWING TITLE | DRAWING NUMBER |
|---|---|---|
| 3 | UV NETWORK DIAGRAM | 1-0101-ANET-U001-001 |
| 2 | UV CONTROL PANEL 2 - CP-U8002 | 1-0101-ACBD-U102-001 |
| 1 | UV AREA CONTROL ROOM | 1-0101-AGAD-U001-001 |

REFERENCE DRAWING

| NO. | REVISIONS | DATE | DESIGN | CHECK |
|---|---|---|---|---|
| 0 | ISSUED FOR TENDER | 2023-03-17 | KG | SDS |

AECOM

| | |
|---|---|
| DESIGNED BY: KG | CHECKED BY: SDS |
| DRAWN BY: TW | APPROVED BY: SRB |
| SCALE: NTS | RELEASED FOR CONSTRUCTION BY: |
| DATE: 2023-03-17 | DATE: |
| CONSULTANT NO.: | |

ENGINEER'S SEAL
PROVINCE OF MANITOBA S.D. SYMONS Member 43183 2023/03/17 REGISTERED PROFESSIONAL ENGINEER

ENGINEERS GEOSCIENTISTS MANITOBA
Certificate of Authorization
AECOM Canada Ltd.
No. 4671 Date: 2023/03/17

Winnipeg
THE CITY OF WINNIPEG
WATER AND WASTE DEPARTMENT

NORTH END SEWAGE TREATMENT PLANT
DCS MIGRATION
POWER DISTRIBUTION SCHEMATIC
UV CONTROL PANEL CP-U8002

| CITY DRAWING NUMBER | SHEET | REV. | SIZE |
|---|---|---|---|
| 1-0101-AWDG-U002 | 001 | 0 | A1 |

LAST SAVE: 2023/03/17 4:05 PM
PATH: C:\Users\wilcoxt\ACCDocs\AECOM\City of Winnipeg - NEWPCC Upgrades 2021\Project Files\900 Design Collaboration\60643525 DCS Migration\02 - Main Package\1-0101-AWDG-A000 rev 2.dwg