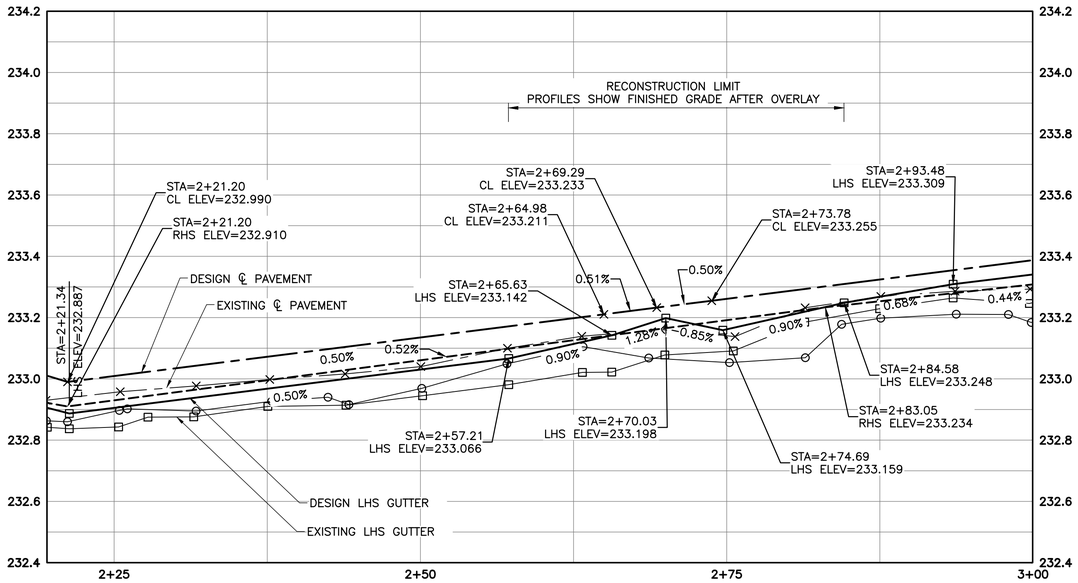

ROAD PROFILE

SCALE: 1:250 HOR 1:10 VER

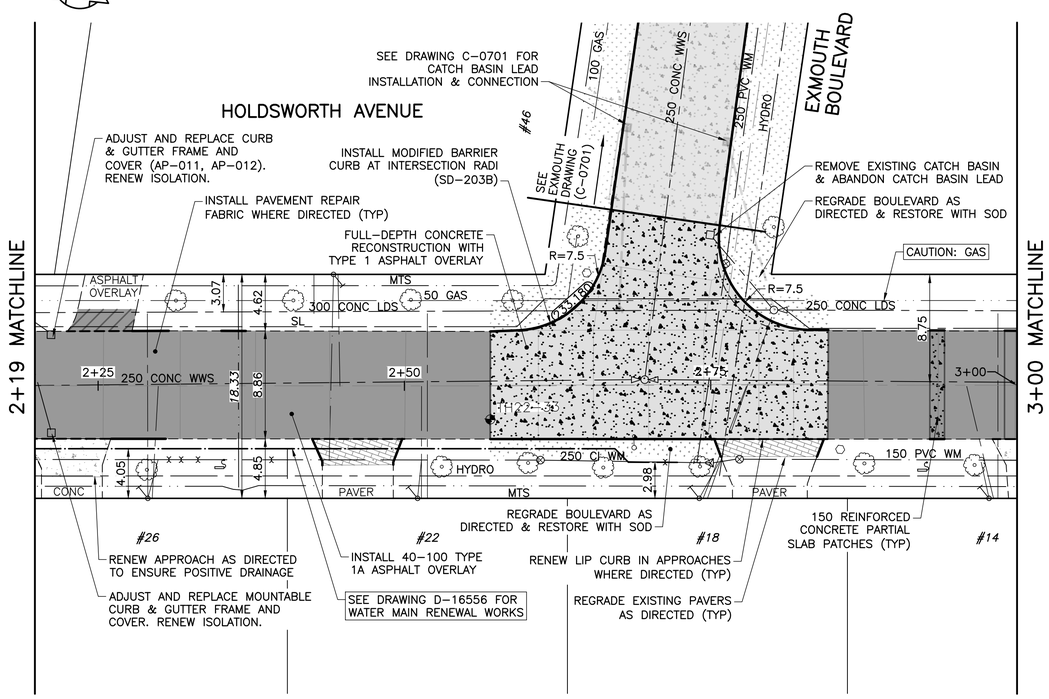

PLAN

SCALE: 1:250 HOR

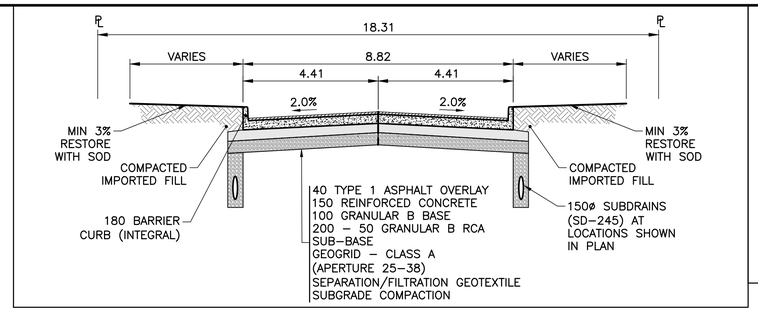

RECONSTRUCTION CROSS SECTION

SCALE: NTS

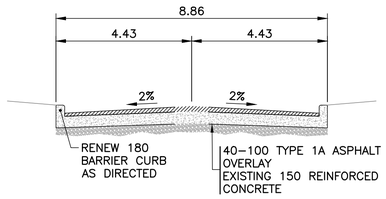

TYPICAL CROSS SECTION

SCALE: NTS

NOTES:

1. ALL WORK & MATERIALS TO BE IN ACCORDANCE WITH THE LATEST REVISION OF THE CITY OF WINNIPEG STANDARD CONSTRUCTION SPECIFICATIONS AS OF THREE DAYS BEFORE TENDER CLOSES.
2. CONTRACTOR TO CONFIRM THE LOCATION OF ALL UTILITIES & SERVICES IN THE FIELD PRIOR TO CONSTRUCTION.
3. ALL ROADWAY DIMENSIONS ARE SHOWN TO BACK OF CURB.
4. CHAINAGE IS BASED ON CENTRELINE OF RIGHT-OF-WAY.
5. LHS & RHS REFER TO LEFT HAND SIDE & RIGHT HAND SIDE WHEN ORIENTED TOWARDS THE INCREASING CHAINAGE IN THE STATION VALUE.
6. CONTRACTOR TO PROTECT EXISTING TREES WITHIN LIMITS OF CONSTRUCTION.
7. LAMP STANDARDS, HYDRO POLES, AND ANCHORS THAT REQUIRE TEMPORARY SUPPORT, REMOVAL OR REPLACEMENT, TO BE DONE AT CONTRACTORS EXPENSE.
8. INSTALL CONCRETE ISOLATIONS IN ACCORDANCE WITH CITY OF WINNIPEG STANDARDS.
9. EXISTING ASPHALT OVERLAYS TO BE PLANED TO THE LIMITS SHOWN OR AS DIRECTED BY CONTRACT ADMINISTRATOR.
10. FINAL GRADES OF OVERLAYS AND SIDEWALKS TO BE PROVIDED DURING CONSTRUCTION.
11. PARTIAL CONCRETE SLAB PATCHES INDICATED ARE ONLY A REPRESENTATION OF THE PAVEMENT REPAIRS REQUIRED. ACTUAL EXTENTS OF PAVEMENT REPAIRS WILL BE AS DIRECTED BY THE CONTRACT ADMINISTRATOR.
12. TYPE OF CONCRETE REPAIR (FULL OR PARTIAL DEPTH, SLAB REPLACEMENT) TO BE AS DIRECTED BY CONTRACT ADMINISTRATOR.
13. PLACE PAVEMENT REPAIR FABRIC WHERE DIRECTED BY THE CONTRACT ADMINISTRATOR.
14. REPLACE ADJACENT CURB WITH ANY SLAB RENEWALS WHERE APPLICABLE.
15. RENEW CURB & SIDEWALK WHERE DIRECTED.
16. ALL CURBS THAT ARE BEING RENEWED ON A RADIUS SHALL BE CONSTRUCTED AS A MODIFIED BARRIER CURB TO THE RADIUS SHOWN ON THE DRAWINGS UNLESS IT IS ONLY A SHORT REPAIR TO AN EXISTING BARRIER CURB.
17. INSTALL DETECTABLE TILE AT INTERSECTIONS WHERE DIRECTED (CW3326).
18. ADJUST ALL WATER VALVES, HYDRANTS, MANHOLES, & CATCH BASINS IN AREA OF WORK TO MATCH NEW GRADES.
19. REPLACE FRAMES & COVERS WHERE DIRECTED.
20. PLACE TOPSOIL, SEED, & SOD WHERE DIRECTED.

PROPERTY LIMITS DELINEATION

DELINEATION OF PROPERTY LIMITS AS SHOWN ON THIS DWG DOES NOT REPRESENT A "LEGAL SURVEY". KGS GROUP MAKES NO REPRESENTATION OR WARRANTY AS TO THE ACCURACY OF PROPERTY LIMITS DELINEATED ON THIS DWG, NOR ON THE DIMENSIONAL ACCURACY OF DWG FEATURES RELATIVE TO THOSE PROPERTY LIMITS.

WARNING

NOTIFY THE GAS COMPANY OF THE PROPOSED LOCATION OF EXCAVATION.

TAKE PRECAUTION TO AVOID DAMAGE TO GAS COMPANY INSTALLATIONS.

SEE PROVINCIAL REGULATION 210/72 FOR DETAILS.

METRIC

WHOLE NUMBERS INDICATE MILLIMETRES
DECIMALIZED NUMBERS INDICATE METRES

EXISTING	LEGEND-PLAN	PROPOSED	EXISTING	LEGEND-PLAN	PROPOSED	EXISTING	LEGEND-PROFILE	PROPOSED
300 LDS	LAND DRAINAGE SEWER	300 LDS	—x—	FENCE			LIGHT STANDARD	
250 WWS	WASTE WATER SEWER	250 WWS	—>—	DITCH			TRAFFIC SIGNAL	
	GAS					EXISTING	LEGEND-PLAN	PROPOSED
	HYDRO			BACK OF CURB				
	M.T.S.			ASPHALT MILL & FILL				
150 WM	WATER MAIN	150 WM		ASPHALT				
	HYDRANT			CONCRETE			LHS SIDEWALK	
	VALVE			PVMT. REPAIR FABRIC			RHS SIDEWALK	
	MANHOLE			LANDSCAPING			LHS GUTTER	
	CATCH BASIN			PROPERTY LINE			RHS GUTTER	
	CURB INLET			TEST HOLE			℄ PROFILE	
	POLES T-MTS H-HYDRO			GEODETIC BENCHMARK			LHS PROPERTY LINE (PL)	
	GUY WIRE		231.33	ELEVATION	(231.333)		RHS PROPERTY LINE (PL)	

SCALE: 1:250m (A1) — 0 5.0 10.0 15.0 20.0m

SCALE: 1:10m (A1) — 0 200 400 600 800mm

LOCATION APPROVED
UNDERGROUND STRUCTURES

SUPV. U/G STRUCTURES COMMITTEE — DATE

NOTE:
LOCATION OF UNDERGROUND STRUCTURES AS SHOWN ARE BASED ON THE BEST INFORMATION AVAILABLE BUT NO GUARANTEE IS GIVEN THAT ALL EXISTING UTILITIES ARE SHOWN OR THAT THE GIVEN LOCATIONS ARE EXACT. CONFIRMATION OF EXISTENCE AND EXACT LOCATION OF ALL SERVICES MUST BE OBTAINED FROM THE INDIVIDUAL UTILITIES BEFORE PROCEEDING WITH CONSTRUCTION.

B.M. ELEV. — COORDINATE SYSTEM: UTM WITH NAD 83 DATUM, ZONE 14, METER

NO.	REVISIONS	DATE	BY
0	ISSUED FOR TENDER	23/04/19	GES

KGS GROUP

DESIGNED BY	ALH	CHECKED BY	CR
DRAWN BY	ALH	APPROVED BY	GES
HOR. SCALE: 1:250 VERTICAL: 1:10		RELEASED FOR CONSTRUCTION:	----
DATE	2022-07-11	DATE	----

ENGINEER'S SEAL — PROVINCE OF MANITOBA — G.E. SMALLEY — Member 33683 — 2023-04-19 — REGISTERED PROFESSIONAL ENGINEER

CONSULTANT DRAWING NO. C-0602

ISSUED FOR TENDER
NOT TO BE USED FOR CONSTRUCTION

ENGINEERS GEOSCIENTISTS MANITOBA
Certificate of Authorization
KGS Group
No. 245

SITE 06
TENDER NO. 66-2023

Winnipeg

THE CITY OF WINNIPEG
PUBLIC WORKS DEPARTMENT
ENGINEERING DIVISION

PROJECT TITLE
2023 LOCAL STREET RENEWALS:
HOLDSWORTH AVE & VARIOUS LOCATIONS
HOLDSWORTH AVE: ALDERSHOT BLVD TO GLASTONBURY BLVD – MINOR REHABILITATION
PLAN & PROFILE
STA 2+19 TO STA 3+00

SHEET 19 OF 26

COMPUTER FILE NAME 22-0107-009

CITY DRAWING NUMBER C-0602

Filename: \\c-file-4\pw-data\Projects\2022\22-0107-009\Dwg\Mun\Road Works\66-2023_Contract 1\22-0107-009_C1_CALL_2_66-2023 – Tab:C-0602 Plotted By: GSmalley 23/04/19 [Wed 1:47pm]
A1 (841x594) / PLOT SCALE: 1:1