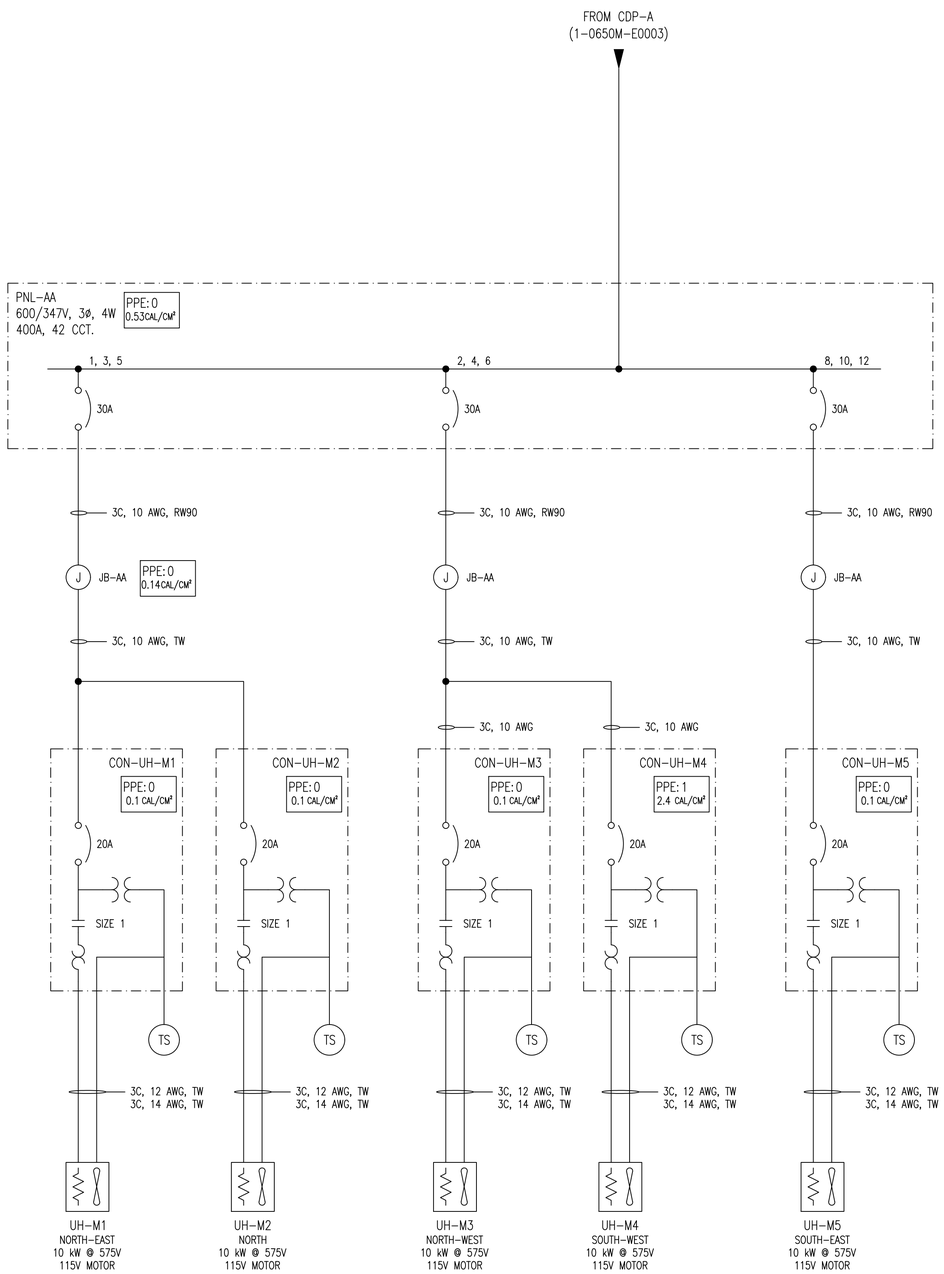

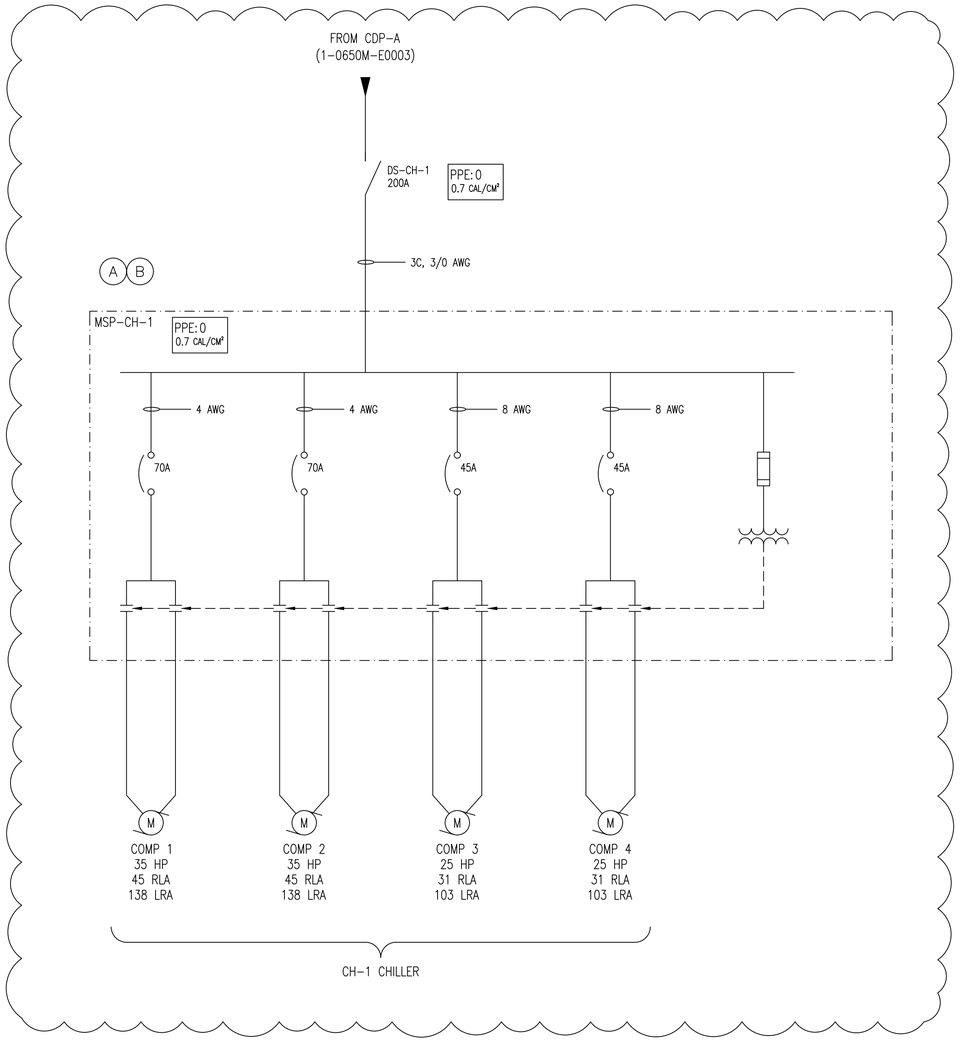

DEMOLITION NOTES:

(A) CITY OF WINNIPEG WILL SALVAGE PARTS AND PROVIDE DEMOLITION TO THE EXISTING CHILLER CH-1 AND COOLING TOWER. CONTRACTOR TO COORDINATE WITH CONTRACT ADMINISTRATOR AND THE CITY OF WINNIPEG TO PROVIDE DEMOLISHING SCHEDULE TO AVOID ANY DELAYS AND WORK OVERLAP IN THE CONSTRUCTION ACTIVITIES.

(B) DEMOLISH AND DISCONNECT ALL POWER AND INSTRUMENT WIRING AND CONDUITS FOR THE CHILLER AND COOLING TOWER. RETAIN CHILLER POWER CABLES CONDUIT FROM CDP-A FOR REUSE IN NEW CHILLER CONSTRUCTION. EVALUATE CONDUITS FOR ROUTING MODIFICATION AND REUSE, CONSULT WITH CONTRACT ADMINISTRATOR FOR CONDUIT REUSE PLAN.

LEGEND:

EXISTING

DEMOLISH

NOTES:

1. ARC FLASH VALUES ARE BASED UPON THE PROTECTION SETTINGS SPECIFIED IN THE ARC FLASH STUDY REPORT. ALL PHASE 1 REQUIRED WORK MUST BE PERFORMED PRIOR TO APPLYING THE ARC FLASH LABELS.

DRAWING NUMBER	REFERENCE DRAWINGS
1-0650M-E0001	ELECTRICAL SINGLE LINE DIAGRAM – LEGEND & DETAILS

ENGINEERS GEOSCIENTISTS MANITOBA
Certificate of Authorization
AECOM Canada Ltd.
No. 4671 Date: 2023-07-14

NO.	REVISIONS	DATE	DESIGN	CHECK
1	ISSUED FOR TENDER/CONSTRUCTION	2023/07/14	MAM	ALV
0	ISSUED FOR DEMOLITION	2011/12/12	VE	CJR

AECOM

DESIGNED BY: MAM	CHECKED BY: ALV
DRAWN BY: MAM	APPROVED BY: SSB
SCALE: NTS	RELEASED FOR CONSTRUCTION BY:
DATE: 2023-07-14	DATE:
CONSULTANT NO.:	

ENGINEER'S SEAL
PROVINCE OF MANITOBA
S.S. BOGHOSIAN
Member
33454
REGISTERED PROFESSIONAL ENGINEER
2023-07-14

Winnipeg
THE CITY OF WINNIPEG
WATER AND WASTE DEPARTMENT

HURST PUMPING STATION
HVAC UPGRADES
ELECTRICAL SINGLE LINE DIAGRAM
PNL-AA AND CHILLER

CITY DRAWING NUMBER	SHEET	REV.	SIZE
1-0650M-E0015	001	1	A1

A1 SIZE - 594mm x 841mm

LAST SAVE: 2023/07/13 8:40 AM
PATH: C:\Users\mamai\AECOM\ELENS Romania - General\PROJECTS\Hurst Pumping Station HVAC\Electrical\Working\1-0650M-E0015-001-R1.dwg