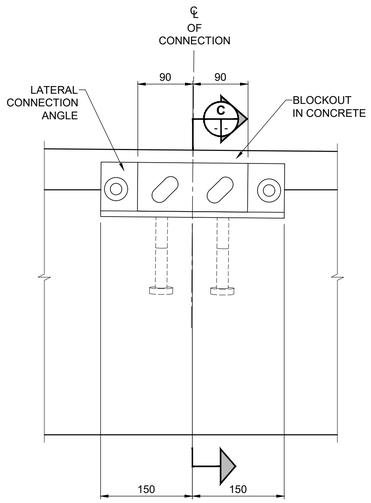

ELEVATION

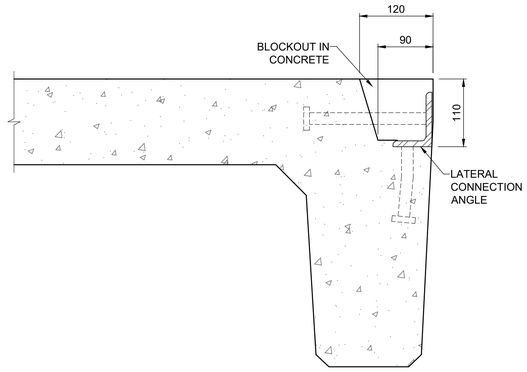

SECTION

DETAIL
LATERAL CONNECTION ANGLE
SCALE: 1:5

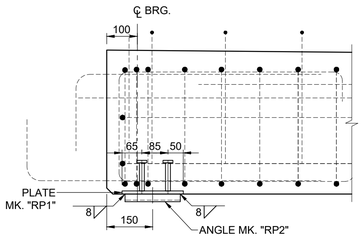

DETAIL
SIDE VIEW
SCALE: 1:10

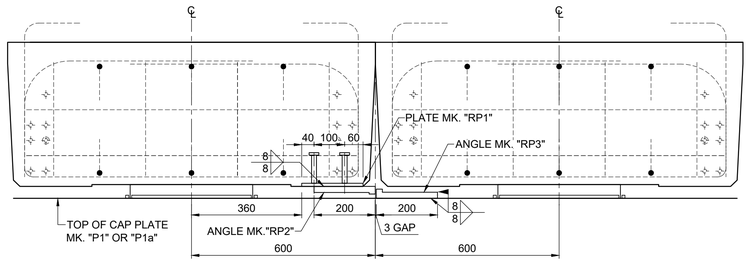

END VIEW
SCALE 1:10

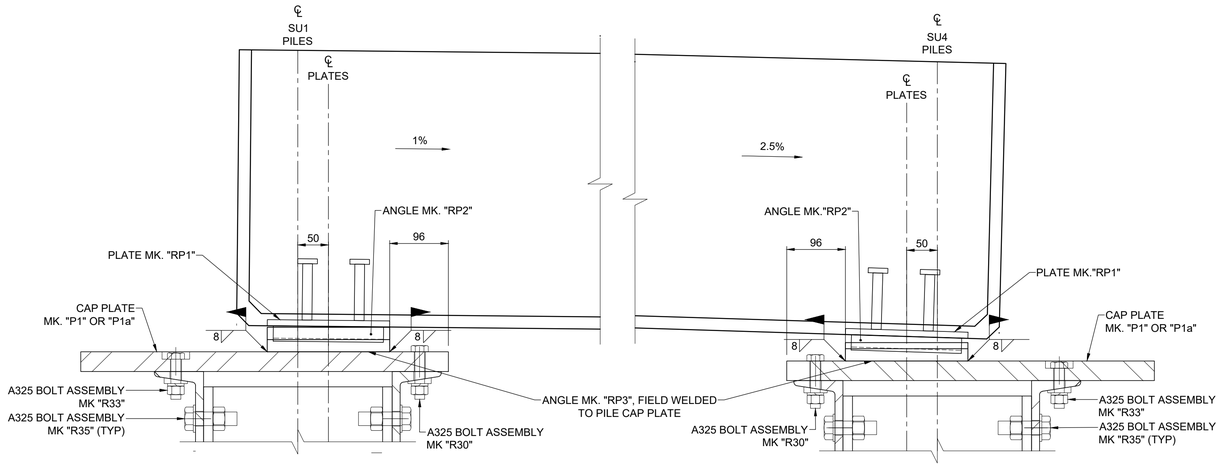

SU1 SIDE VIEW
SCALE 1:5

SU4 SIDE VIEW
SCALE 1:5

LATERAL RETAINING ANGLE DETAILS

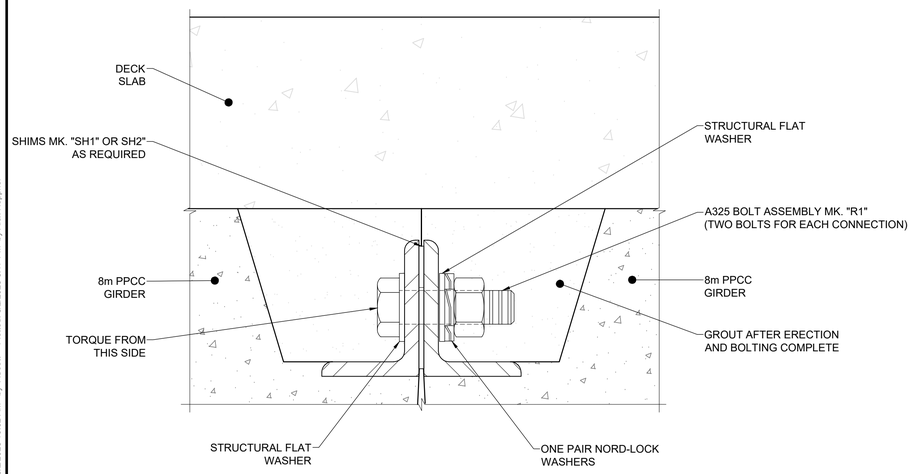

GIRDER LATERAL CONNECTION
SECTION VIEW
SCALE 1:2

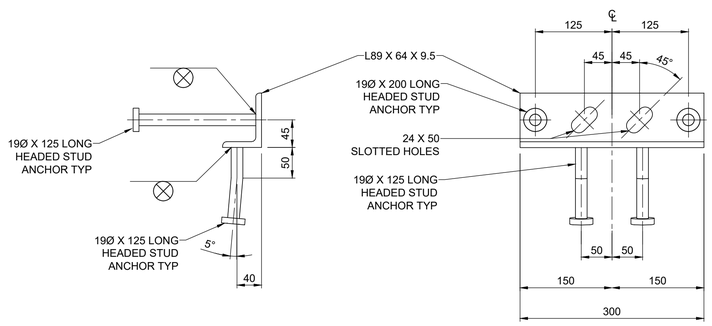

SIDE VIEW **ELEVATION**

CONNECTION ANGLE DETAILS
SCALE 1:5

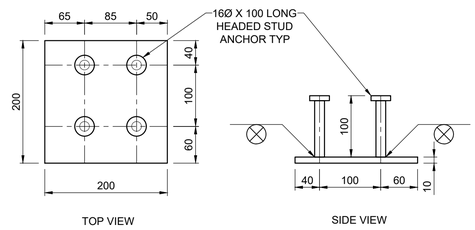

TOP VIEW SIDE VIEW

GIRDER RETAINING PLATE
MK. "RP1"
SCALE 1:5

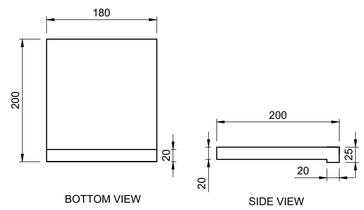

BOTTOM VIEW SIDE VIEW

GIRDER RETAINING ANGLE
MK. "RP2"
SCALE 1:5

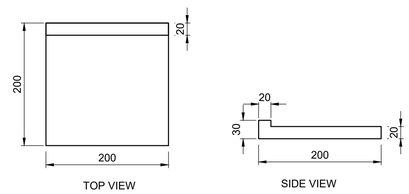

TOP VIEW SIDE VIEW

PILE CAP RETAINING ANGLE
MK. "RP3"
SCALE 1:5

NOTE: SEE SHEET 2 FOR STEEL BOLT HARDWARE SCHEDULE.

ENGINEERS GEOSCIENTISTS MANITOBA
Certificate of Authorization
MORRISON HERSHFIELD
No. 1736

TENDER No. 335-2023

LOCATION APPROVED
UNDERGROUND STRUCTURES

SUPR. U/G STRUCTURES COMMITTEE — DATE

NOTE:
LOCATION OF UNDERGROUND STRUCTURES AS SHOWN ARE BASED ON THE BEST INFORMATION AVAILABLE BUT NO GUARANTEE IS GIVEN THAT ALL EXISTING UTILITIES ARE SHOWN OR THAT THE GIVEN LOCATIONS ARE EXACT. CONFIRMATION OF EXISTENCE AND EXACT LOCATION OF ALL SERVICES MUST BE OBTAINED FROM THE INDIVIDUAL UTILITIES BEFORE PROCEEDING WITH CONSTRUCTION.

BM 78-009 ELEV 232.749 m — N.W. Cor. Paddington Rd. & Dakota St., 19 mm dia. x 6.1 m I.B. in Valve Box, 5.5 m S. of N.L. Paddington Rd. & on W.L. of Dakota St., in traffic island

No.	REVISIONS	YY/MM/DD	BY
C	ISSUED FOR TENDER	23/08/02	BAP
B	ISSUED FOR 95% REVIEW	23/06/27	BAP
A	ISSUED FOR 50% REVIEW	23/04/14	BAP

MORRISON HERSHFIELD

DESIGNED BY	AGG	CHECKED BY	SAL
DRAWN BY	AS	APPROVED BY	BAP
HOR SCALE	AS SHOWN	RELEASED FOR CONSTRUCTION	
VERT SCALE	AS SHOWN		
DATE	JUNE 27, 2023	DATE	

PROFESSIONAL'S SEAL
PROVINCE OF MANITOBA — A.D.G. GILARSKI — Member 32144 — 2023-08-02 — REGISTERED PROFESSIONAL ENGINEER

CONSULTANT FILE NAME
2203665-CBR DD-GIRDER03.dwg

Winnipeg
THE CITY OF WINNIPEG
PUBLIC WORKS DEPARTMENT
ENGINEERING DIVISION

CREEK BEND ROAD BRIDGE REPLACEMENT AND RELATED WORKS

GIRDER CONNECTION AND RETAINING ANGLE DETAILS

CITY DRAWING NUMBER: B149-23-19
SHEET 19 OF 52
DRAWING NUMBER: 19

METRIC
WHOLE NUMBERS INDICATE MILLIMETRES
DECIMALIZED NUMBERS INDICATE METRES

ISO A1 - 594mm x 841mm
X:\Proj\2022\2203665\CotW 293-2022 Creek Bend Road Bri\09_CAD\07 Sheets\Structural\Detailed Design\2203665-CBR DD-GIRDER03.dwg Last Saved: 8/2/2023 10:02 AM by ASCott Plotted: 8/2/2023 3:17 PM by Alex Heppner