ISO A1 - 594mm x 841mm

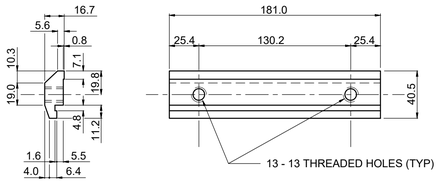


## 1/17 RAIL CLAMP BAR

SCALE: NTS

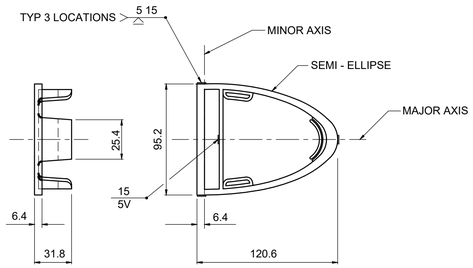


## 3/17 RAIL END CAP

SCALE: NTS

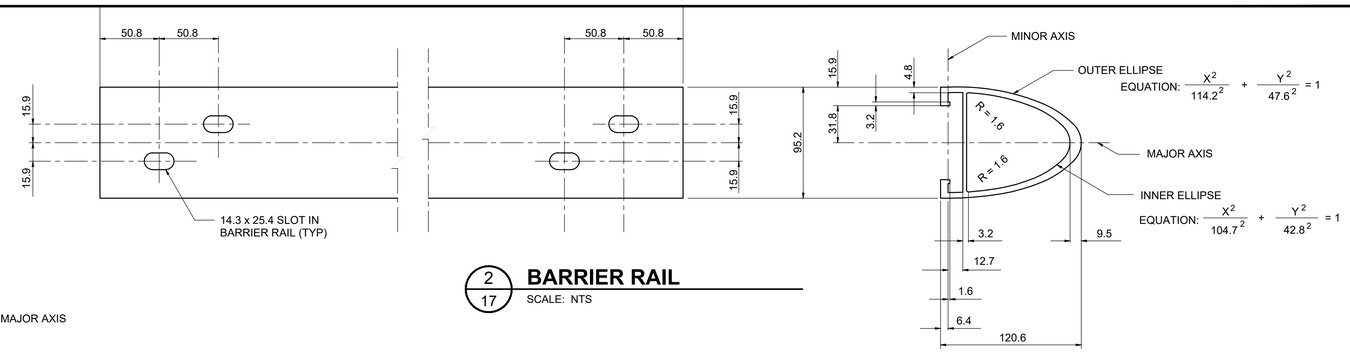


## 2/17 BARRIER RAIL

SCALE: NTS

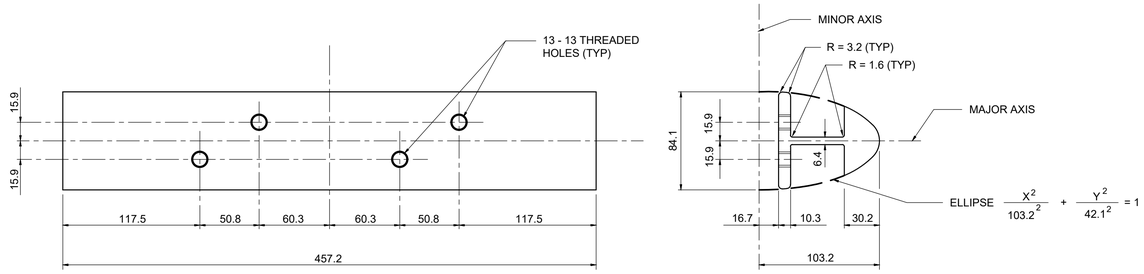


## 4/17 SPLICE BAR

SCALE: NTS

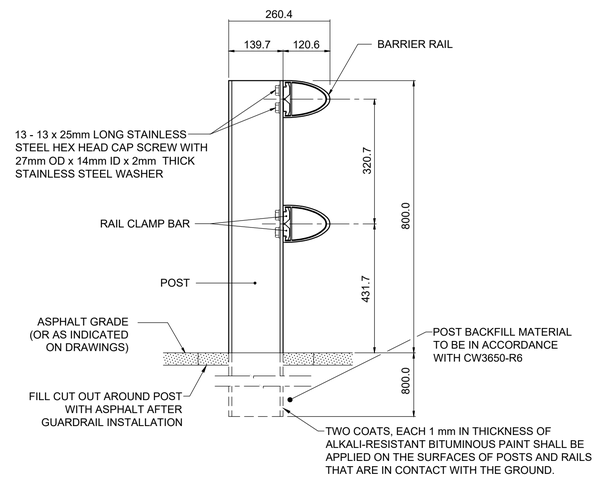


## 5/17 RAIL TO POST ASSEMBLY DETAIL

SCALE: NTS

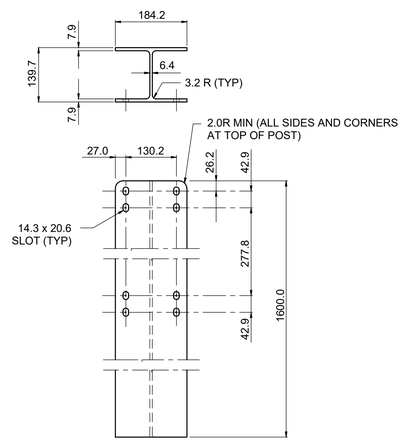


## 6/17 1.6 m POST

(0.800 m POST SIMILAR EXCEPT WITH
ONLY FOUR SLOTS AT TOP OF POST)

SCALE: NTS

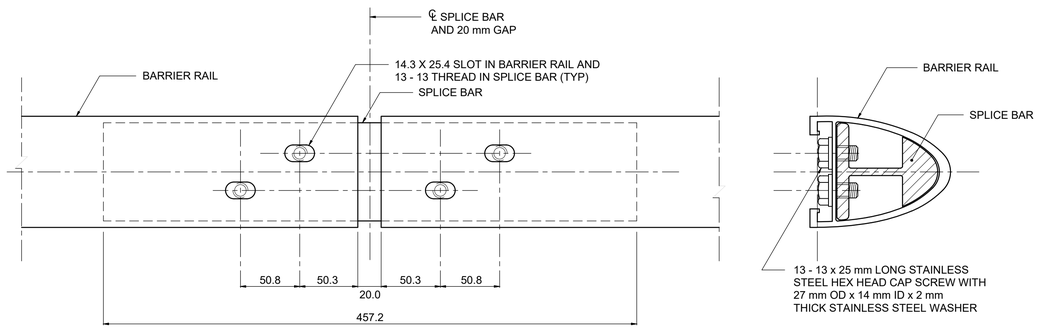


## 7/17 SPLICE BAR TO RAIL ASSEMBLY

SCALE: NTS

## MATERIAL SPECIFICATION

1. ALUMINUM RAILS, POSTS, SPLICE BARS, AND RAIL END CAPS SHALL CONFORM TO ASTM B221, ALLOY 6061 - T6, OR ALLOY 6351 - T6.
2. TYPE 316. STAINLESS STEEL WASHERS SHALL CONFORM TO ASTM A296, TYPE 316.
3. CAP SCREWS SHALL CONFORM TO ASTM A276, TYPE 316 STAINLESS STEEL.
4. ANTI-SEIZE COATING TO BE APPLIED TO ALL THREADED COMPONENTS WHEN BEING ASSEMBLED,
   i.e. LPS-3-MANUFACTURED BY HOLT LLOYD (CANADA) LTD., MARKHAM, ONTARIO L3R 2Z3
5. TWO COATS, EACH 1 mm IN THICKNESS OF ALKALI-RESISTANT BITUMINOUS PAINT SHALL BE APPLIED ON THE SURFACES OF POSTS AND RAILS THAT ARE IN CONTACT WITH THE GROUND.

## METRIC

WHOLE NUMBERS INDICATE MILLIMETRES
DECIMALIZED NUMBERS INDICATE METRES

ENGINEERS GEOSCIENTISTS MANITOBA
Certificate of Authorization
MORRISON HERSHFIELD
No. 1736

TENDER No. 335-2023

| EXISTING | LEGEND - PLAN | NEW | EXISTING | LEGEND - PLAN | NEW | EXISTING | LEGEND - PLAN | NEW |
|---|---|---|---|---|---|---|---|---|
| | GAS | | | MANHOLE | | | CONCRETE PAVEMENT | |
| | MTS HANDWELL/PEDESTAL | | | CATCH BASIN/CATCH PIT | | | CONC SIDEWALK/MEDIAN | |
| | HYDRO HANDWELL/CABINET | | | CURB INLET WITH BOX | | | ASPHALT PAVEMENT | |
| | CATV/FIBRE OPTIC | | | TREE | | | PAVING STONE | |
| | TRAFFIC SIGNALS/PIT | | TH-12 | TEST HOLE | | | GRAVEL | |
| | LAND DRAINAGE SEWER | | | PROPERTY LINE | | | RAMP CURB | |
| | SANITARY/COMBINED SEWER | | | SURVEY BAR | | | PLANING/REMOVAL | |
| | CB LEAD/SSP/DCP | | | FENCE | | | | |
| | WATERMAIN | | | BOC/EDGE OF PAVEMENT | | | | |
| | SUBDRAIN | | 33.000 | ELEVATION | 33.333 | | | |
| | DITCH | | | TRAFFIC SIGN | | | | |

LOCATION APPROVED
UNDERGROUND STRUCTURES

SUPR. U/G STRUCTURES COMMITTEE — DATE

**NOTE:**
LOCATION OF UNDERGROUND STRUCTURES AS SHOWN ARE BASED ON THE BEST INFORMATION AVAILABLE BUT NO GUARANTEE IS GIVEN THAT ALL EXISTING UTILITIES ARE SHOWN OR THAT THE GIVEN LOCATIONS ARE EXACT. CONFIRMATION OF EXISTENCE AND EXACT LOCATION OF ALL SERVICES MUST BE OBTAINED FROM THE INDIVIDUAL UTILITIES BEFORE PROCEEDING WITH CONSTRUCTION.

BM 78-009 — N.W. Cor. Paddington Rd. & Dakota St., 19 mm dia. x 6.1 m I.B. in Valve Box, 5.5 m S. of N.L. Paddington Rd. & on W.L. of Dakota St., in traffic island.
ELEV 232.749 m

| No. | REVISIONS | YY/MM/DD | BY |
|---|---|---|---|
| C | ISSUED FOR TENDER | 23/08/01 | JGK |
| B | ISSUED FOR 95% REVIEW | 23/06/27 | JGK |
| A | ISSUED FOR 50% REVIEW | 23/04/14 | JGK |

MORRISON HERSHFIELD

| | | | |
|---|---|---|---|
| DESIGNED BY | STANDARD | CHECKED BY | JGK |
| DRAWN BY | STANDARD | APPROVED BY | RPB |
| HOR SCALE | AS NOTED | RELEASED FOR CONSTRUCTION | |
| VERT SCALE | | | |
| DATE | JUNE 27, 2023 | DATE | |

PROFESSIONAL'S SEAL
PROVINCE OF MANITOBA — J.G. KENNEDY — Member — 22326 — 2023-08-03 — REGISTERED PROFESSIONAL ENGINEER

CONSULTANT FILE NAME
2203665-Creek Bend-RH-02.dwg

Winnipeg

# THE CITY OF WINNIPEG
## PUBLIC WORKS DEPARTMENT
### ENGINEERING DIVISION

**CREEK BEND ROAD BRIDGE REPLACEMENT AND RELATED WORKS**

**CREEK BEND ROAD**
**ROADSIDE HAZARD PROTECTION**
DETAILS

CITY DRAWING NUMBER: P-3567-07
SHEET 49 OF 51
DRAWING NUMBER: 49

x:\Proj\2022\2203665\00-cdw 293-2022 creek bend road bri\09. cad\07 sheets\Roadwork\2203665-Creek Bend-RH-02.dwg Last Saved: 7/12/2023 2:21 PM by KBerard Plotted: 8/1/2023 10:00 AM by Dave Lane