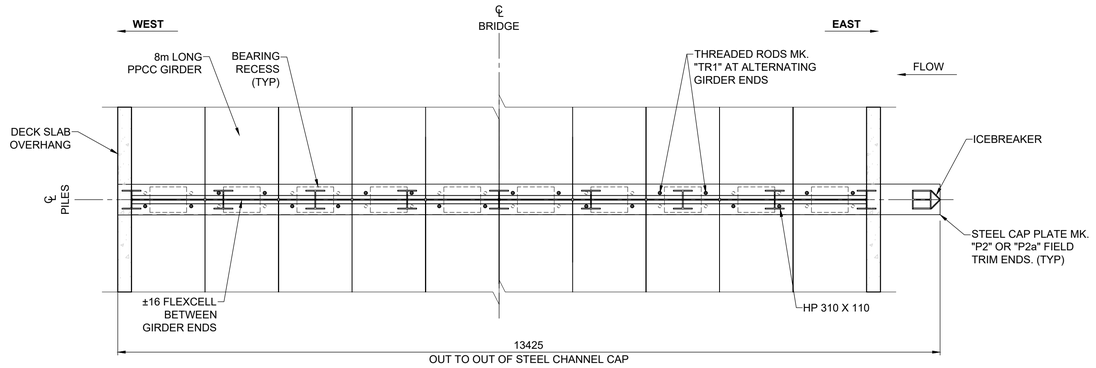

PILE BENT PLAN VIEW

SCALE: 1:50

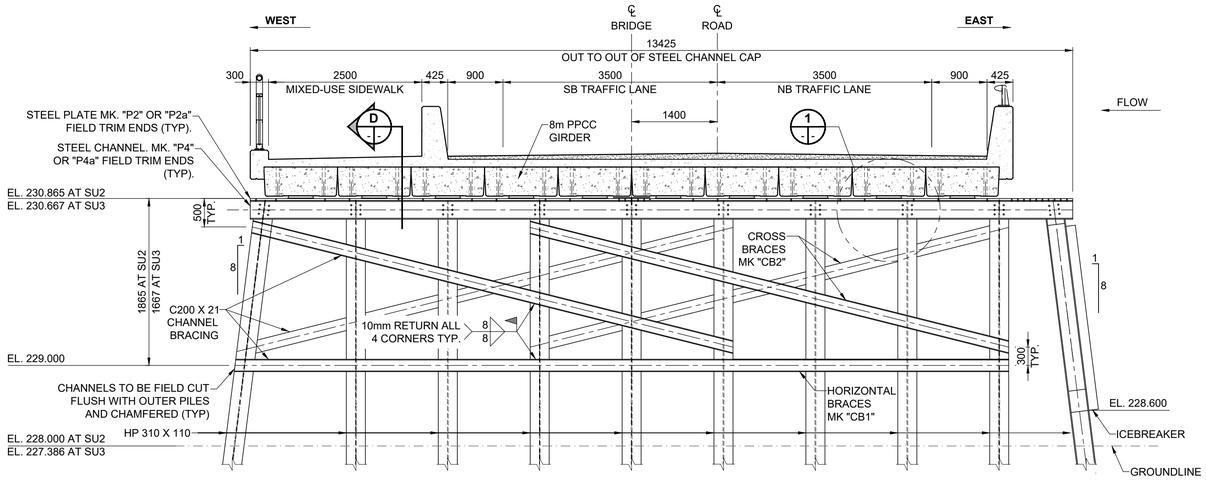

PILE BENT ELEVATION

SCALE: 1:50

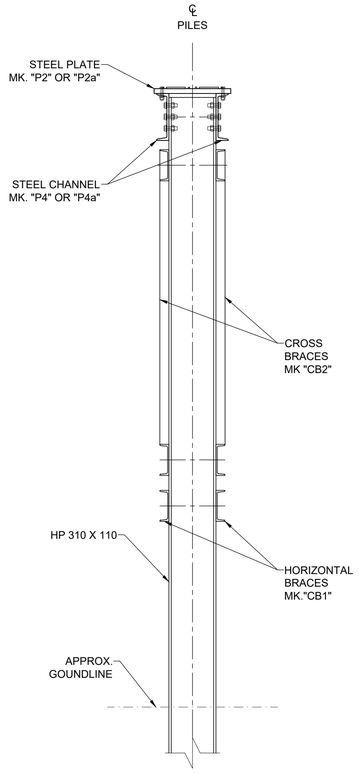

END VIEW AT PILE BENT

SCALE: 1:20

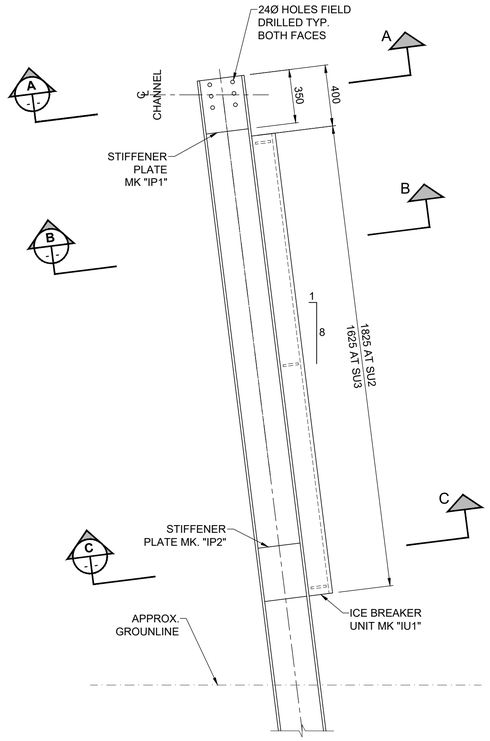

PILE BENT ICEBREAKER

SCALE: 1:20

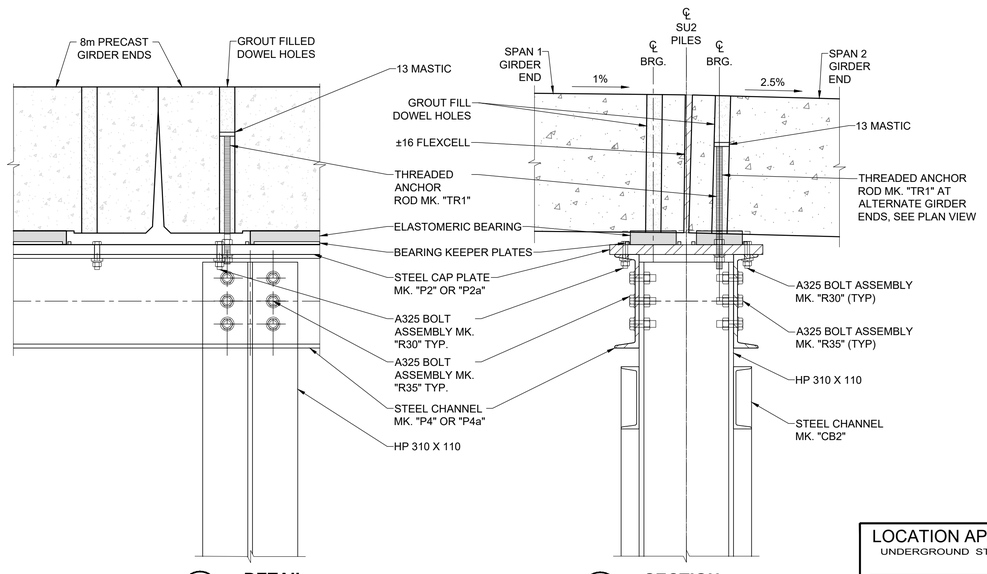

1 DETAIL
SCALE: 1:10

D SECTION
SU2 SHOWN, SU3 SIMILAR
SCALE 1:10

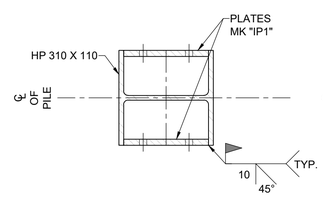

A SECTION
SCALE: 1:10

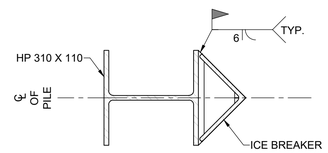

B SECTION
SCALE: 1:10

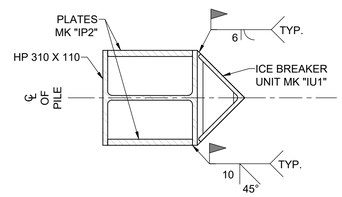

C SECTION
SCALE: 1:10

NOTES:
1. ALL DIAGONAL AND /OR HORIZONTAL STEEL CHANNEL BRACING SHOWN SHALL BE INSTALLED AS PER THE DETAILS, HOWEVER IF THE CHANNEL WATER/ICE LEVEL AT THE TIME OF INSTALLATION OF BRACING IS SUCH AS TO INTERFERE WITH THE SHOWN BRACING, THE ENGINEER SHALL SO BE ADVISED.
2. SEE SHEET 15 FOR ICEBREAKER UNIT MK "IU1", PLATE MK "IP1", AND PLATE MK "IP2" DETAILS
3. SEE SHEET 2 FOR STEEL BOLT HARDWARE SCHEDULE.

ENGINEERS GEOSCIENTISTS MANITOBA
Certificate of Authorization
MORRISON HERSHFIELD
No. 1736

TENDER No. 335-2023

METRIC
WHOLE NUMBERS INDICATE MILLIMETRES
DECIMALIZED NUMBERS INDICATE METRES

LOCATION APPROVED
UNDERGROUND STRUCTURES

SUPR. U/G STRUCTURES COMMITTEE — DATE

NOTE:
LOCATION OF UNDERGROUND STRUCTURES AS SHOWN ARE BASED ON THE BEST INFORMATION AVAILABLE BUT NO GUARANTEE IS GIVEN THAT ALL EXISTING UTILITIES ARE SHOWN OR THAT THE GIVEN LOCATIONS ARE EXACT. CONFIRMATION OF EXISTENCE AND EXACT LOCATION OF ALL SERVICES MUST BE OBTAINED FROM THE INDIVIDUAL UTILITIES BEFORE PROCEEDING WITH CONSTRUCTION.

BM 78-009 N.W. Cor. Paddington Rd. & Dakota St., 19 mm dia. x 6.1 m I.B. in Valve Box, 5.5 m S. of N.L. Paddington Rd. & on W.L. of Dakota St., in traffic island.
ELEV 232.749 m

No.	REVISIONS	YY/MM/DD	BY
C	ISSUED FOR TENDER	23/08/02	BAP
B	ISSUED FOR 95% REVIEW	23/06/27	BAP
A	ISSUED FOR 50% REVIEW	23/04/14	BAP

MORRISON HERSHFIELD

DESIGNED BY	ALP	CHECKED BY	AGG
DRAWN BY	AS	APPROVED BY	BAP
HOR SCALE	AS SHOWN	RELEASED FOR CONSTRUCTION	
VERT SCALE	AS SHOWN		
DATE	JUNE 27, 2023	DATE	

PROFESSIONAL'S SEAL
PROVINCE OF MANITOBA
A.D.G. GILARSKI
Member
32144
2023-08-02
REGISTERED PROFESSIONAL ENGINEER

CONSULTANT FILE NAME
2203665-CBR DD-PIER01.dwg

Winnipeg

THE CITY OF WINNIPEG
PUBLIC WORKS DEPARTMENT
ENGINEERING DIVISION

CREEK BEND ROAD BRIDGE REPLACEMENT AND RELATED WORKS

PIER DETAILS AND SECTIONS

CITY DRAWING NUMBER: B149-23-13
SHEET 13 OF 52
DRAWING NUMBER: 13

ISO A1 - 594mm x 841mm
X:\Proj\2022\2203665\00-CoW 293-2022 Creek Bend Road Bridge CAD\07 Sheets\Structural\Detailed Design\2203665-CBR DD-PIER01.dwg Last Saved: 8/2/2023 11:31 AM by AScott Plotted: 8/2/2023 3:14 PM by Alex Heppner