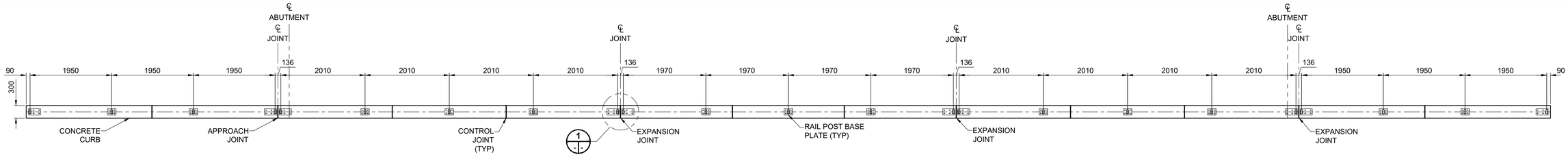

BICYCLE RAIL - POST LAYOUT

SCALE: 1:50

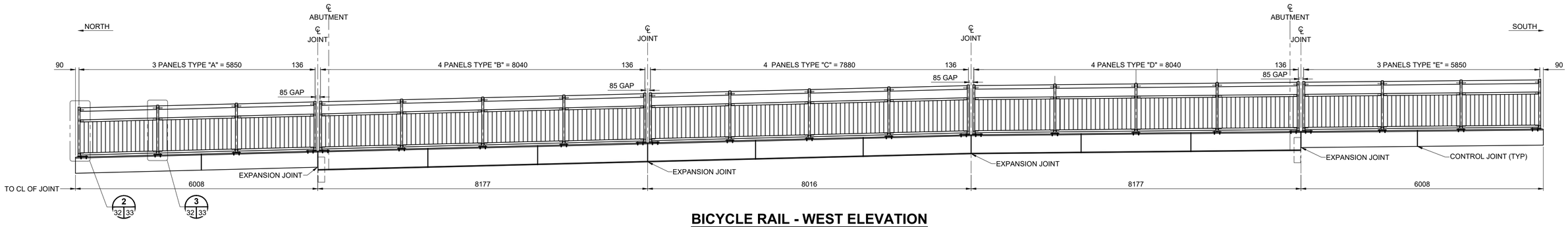

BICYCLE RAIL - WEST ELEVATION

SCALE: 1:50

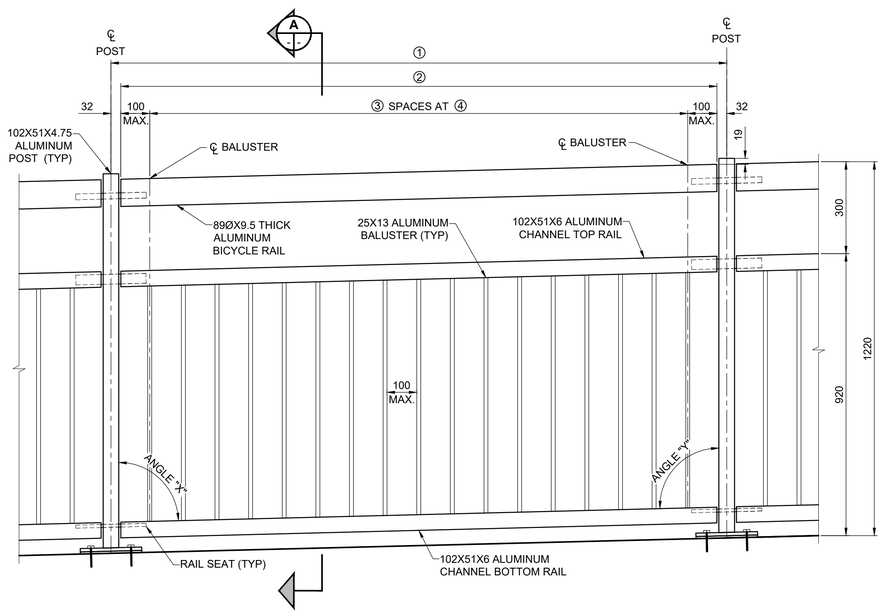

PANEL ELEVATION

SCALE 1:10

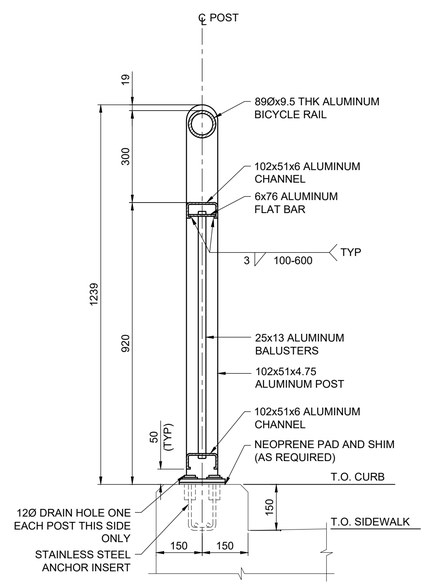

A

SECTION

SCALE: 1:10

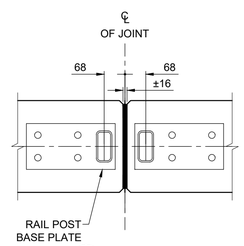

1

DETAIL

SCALE: 1:10

NOTES:
1. ALUMINUM EXTRUSIONS SHALL CONFORM TO ASTM B221 ALLOY 6351.T6.
2. THE M.I.G. PROCESS OF WELDING SHALL BE USED.
3. RAIL POSTS AND BALUSTERS SHALL BE SET PLUMB.
4. EXCEPT WHERE INDICATED, HANDRAIL TOP AND BOTTOM RAILS SHALL BE AT A CONSTANT OFFSET FROM THE TOP OF THE CURB TAKING IN TO ACCOUNT ALL GRADE BREAKS ALONG THE LONGITUDINAL PROFILE.
5. PLACE NEOPRENE PAD UNDER EACH POST BETWEEN BASE PLATE OR SHIM AND CONCRETE SURFACE. ALUMINUM SHIMS MAY BE REQUIRED FOR VERTICAL ALIGNMENT.
6. HANDRAIL ANCHOR INSERTS SHALL BE ACROW-RICHMOND TYPE DGRS-1.

RAIL PANEL DIMENSIONS

PANEL TYPE	NO. REQUIRED	1	2	3	4	ANGLE "X"	ANGLE "Y"
A	3	1950	1886	16	106	88.6	91.4
B	4	2010	1946	16	110	88.6	91.4
C	4	1970	1906	16	107	88.6	91.4
D	4	2010	1946	16	110	89.4	90.6
E	3	1950	1886	16	106	89.4	90.6

METRIC
WHOLE NUMBERS INDICATE MILLIMETRES
DECIMALIZED NUMBERS INDICATE METRES

LOCATION APPROVED
UNDERGROUND STRUCTURES

SUPR, U/G STRUCTURES COMMITTEE — DATE

NOTE:
LOCATION OF UNDERGROUND STRUCTURES AS SHOWN ARE BASED ON THE BEST INFORMATION AVAILABLE BUT NO GUARANTEE IS GIVEN THAT ALL EXISTING UTILITIES ARE SHOWN OR THAT THE GIVEN LOCATIONS ARE EXACT. CONFIRMATION OF EXISTENCE AND EXACT LOCATION OF ALL SERVICES MUST BE OBTAINED FROM THE INDIVIDUAL UTILITIES BEFORE PROCEEDING WITH CONSTRUCTION.

BM 78-009 ELEV 232.749 m — N.W. Cor. Paddington Rd. & Dakota St., 19 mm dia. x 6.1 m I.B. in Valve Box, 5.5 m S. of N.L. Paddington Rd. & on W.L. of Dakota St., in traffic island.

No.	REVISIONS	YY/MM/DD	BY
C	ISSUED FOR TENDER	23/08/02	BAP
B	ISSUED FOR 95% REVIEW	23/06/27	BAP
A	ISSUED FOR 50% REVIEW	23/04/14	BAP

MORRISON HERSHFIELD

DESIGNED BY	ALP	CHECKED BY	AGG
DRAWN BY	AS	APPROVED BY	BAP
HOR SCALE	AS SHOWN	RELEASED FOR CONSTRUCTION	
VERT SCALE	AS SHOWN		
DATE	JUNE 27, 2023	DATE	

PROFESSIONAL'S SEAL
PROVINCE OF MANITOBA — A.D.G. GILARSKI — Member 32144 — 2023-05-02 — REGISTERED PROFESSIONAL ENGINEER

CONSULTANT FILE NAME
22036665-CBR DD-BARRIER06.dwg

ENGINEERS GEOSCIENTISTS MANITOBA
Certificate of Authorization
MORRISON HERSHFIELD
No. 1736

TENDER No. 335-2023

Winnipeg

THE CITY OF WINNIPEG
PUBLIC WORKS DEPARTMENT
ENGINEERING DIVISION

CREEK BEND ROAD BRIDGE REPLACEMENT AND RELATED WORKS

BICYCLE RAILING LAYOUT

CITY DRAWING NUMBER: B149-23-29
SHEET 32 OF 52
DRAWING NUMBER: 32

ISO A1 - 594mm x 841mm
Plotted: 8/2/2023 3:31 PM by Alex Heppner
Last Saved: 8/1/2023 2:48 PM by AHeppner
X:\Proj\2022\22036500-CofW 293-2022 Creek Bend Road Bridge CAD\07 Sheets\Structural\Detailed Design\22036665-CBR DD-BARRIER06.dwg