ISO A1 - 594mm x 841mm

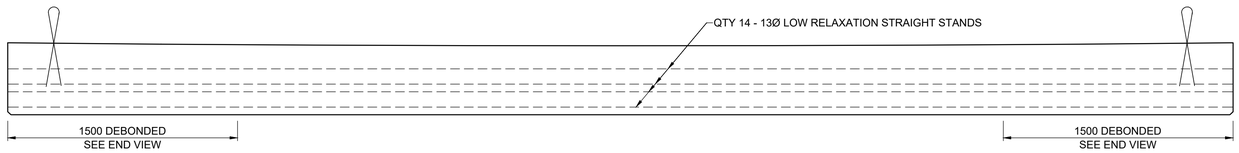

ELEVATION
SCALE 1:20

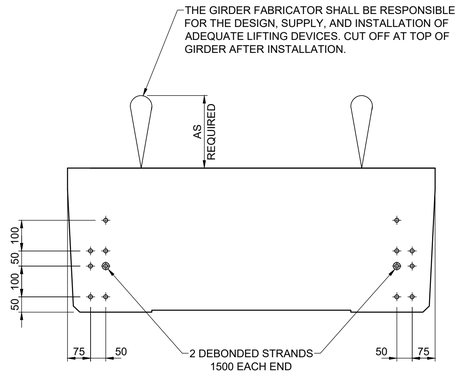

END VIEW
TYPICAL LAYOUT
SCALE 1:10

GIRDER STRAND LAYOUT

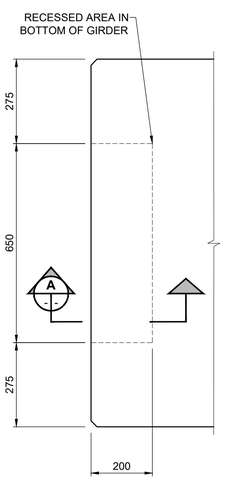

PART PLAN
AT SU1 & SU4
SCALE 1:10

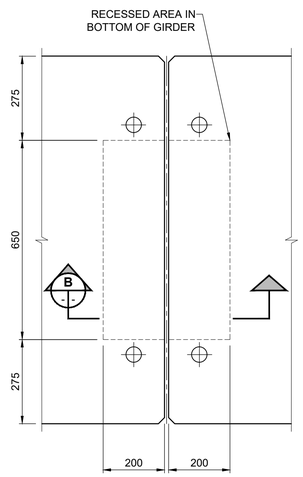

PART PLAN
AT SU2 & SU3
SCALE 1:10

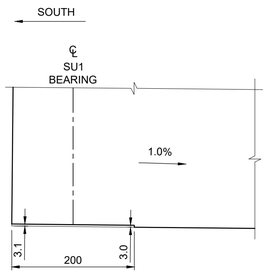

SECTION
AT SU1
SCALE 1:5

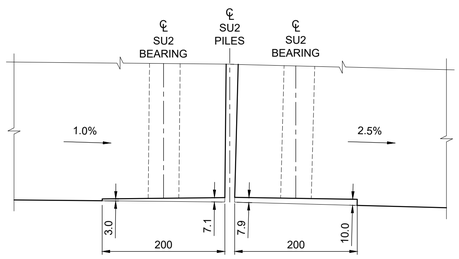

SECTION
AT SU2
SCALE 1:5

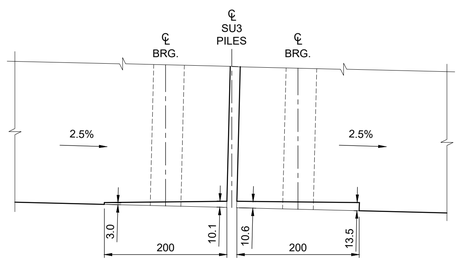

SECTION
AT SU3
SCALE 1:5

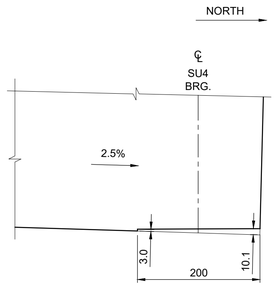

SECTION
AT SU4
SCALE 1:5

BEARING RECESS DETAILS

METRIC
WHOLE NUMBERS INDICATE MILLIMETRES
DECIMALIZED NUMBERS INDICATE METRES

ENGINEERS GEOSCIENTISTS MANITOBA
Certificate of Authorization
MORRISON HERSHFIELD
No. 1736

TENDER No. 335-2023

LOCATION APPROVED
UNDERGROUND STRUCTURES

SUPR. U/G STRUCTURES COMMITTEE — DATE

NOTE:
LOCATION OF UNDERGROUND STRUCTURES AS SHOWN ARE BASED ON THE BEST INFORMATION AVAILABLE BUT NO GUARANTEE IS GIVEN THAT ALL EXISTING UTILITIES ARE SHOWN OR THAT THE GIVEN LOCATIONS ARE EXACT. CONFIRMATION OF EXISTENCE AND EXACT LOCATION OF ALL SERVICES MUST BE OBTAINED FROM THE INDIVIDUAL UTILITIES BEFORE PROCEEDING WITH CONSTRUCTION.

BM 78-009 — N.W. Cor. Paddington Rd. & Dakota St., 19 mm dia. x 6.1 m I.B. in Valve Box, 5.5 m S. of N.L. Paddington Rd. & on W.L. of Dakota St., in traffic island.
ELEV 232.749 m

No.	REVISIONS	YY/MM/DD	BY
C	ISSUED FOR TENDER	23/08/02	BAP
B	ISSUED FOR 95% REVIEW	23/06/27	BAP
A	ISSUED FOR 50% REVIEW	23/04/14	BAP

MORRISON HERSHFIELD

DESIGNED BY	AGG	CHECKED BY	SAL
DRAWN BY	AS	APPROVED BY	BAP
HOR SCALE	AS SHOWN	RELEASED FOR CONSTRUCTION	
VERT SCALE	AS SHOWN		
DATE	JUNE 27, 2023	DATE	

PROFESSIONAL'S SEAL
PROVINCE OF MANITOBA — A.D.G. GILARSKI — Member — 32144 — 2023-08-02 — REGISTERED PROFESSIONAL ENGINEER

CONSULTANT FILE NAME
2203665-CBR DD-GIRDER02.dwg

Winnipeg
THE CITY OF WINNIPEG
PUBLIC WORKS DEPARTMENT
ENGINEERING DIVISION

CREEK BEND ROAD BRIDGE REPLACEMENT AND RELATED WORKS

GIRDER PRESTRESSING AND BEARING RECESS DETAILS

CITY DRAWING NUMBER: B149-23-18
SHEET 18 OF 52
DRAWING NUMBER: 18

X:\Proj\2022\2203665\00-CoRV 293-2022 Creek Bend Road Bri\09. CAD\07 Sheets\Structural\Detailed Design\2203665-CBR DD-GIRDER02.dwg Last Saved: 8/1/2023 2:06 PM by AHeppner Plotted: 8/2/2023 3:16 PM by Alex Heppner