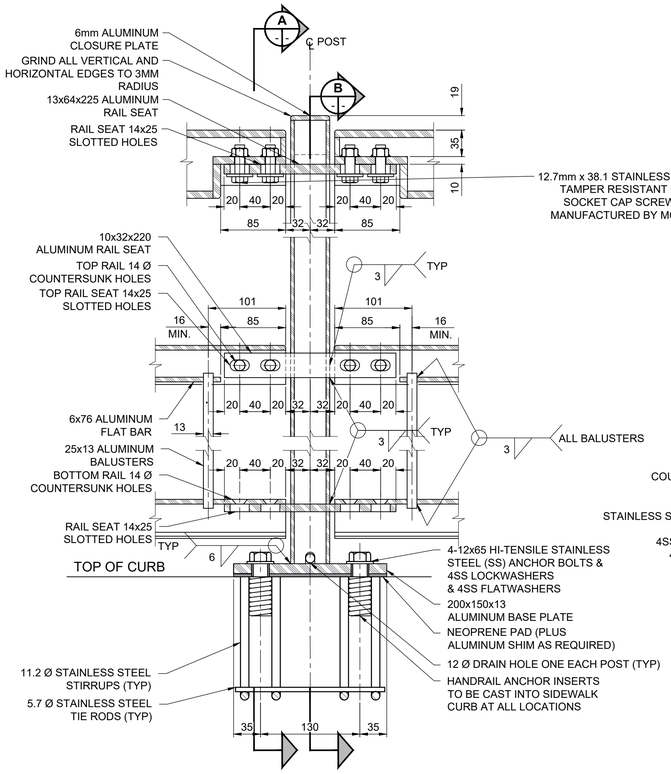

1 / 41 ## **DETAIL**
INTERMEDIATE POSTS
SCALE: 1:4

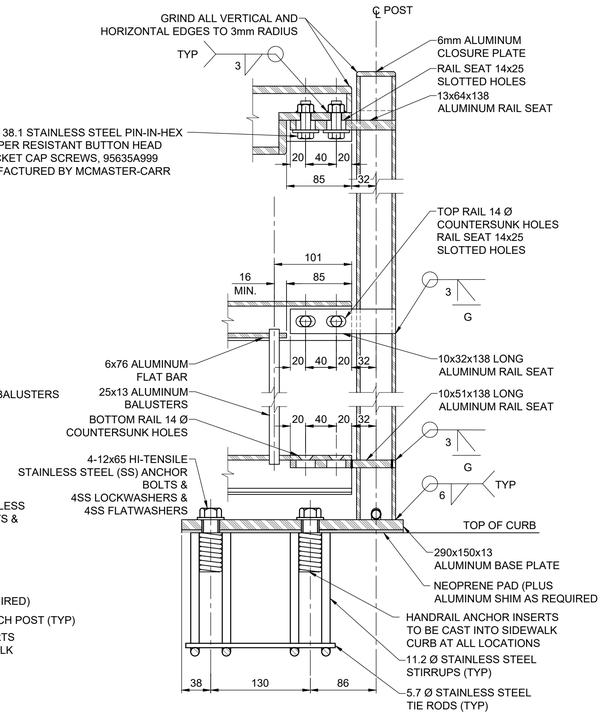

2 / 41 ## **DETAIL**
END POSTS
SCALE: 1:4

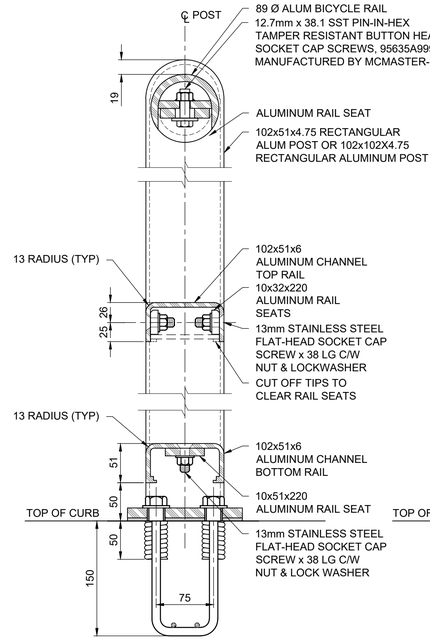

A **SECTION - HANDRAIL POST**
SCALE: 1:4

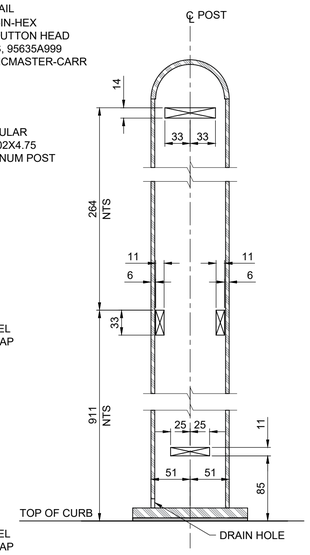

B **SECTION - HANDRAIL POST**
SCALE: 1:4

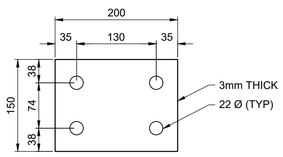

INTERMEDIATE NEOPRENE PAD DETAIL
SCALE 1:5

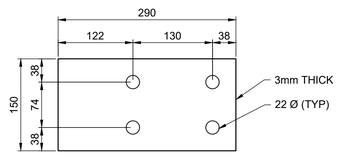

END NEOPRENE PAD DETAIL
SCALE 1:5

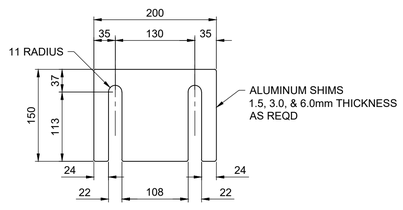

INTERMEDIATE SHIM DETAIL
SCALE 1:5

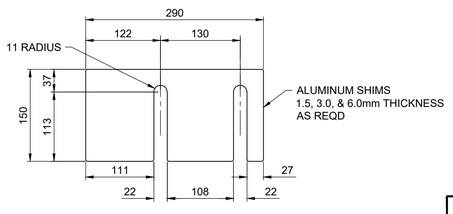

END SHIM DETAIL
SCALE 1:5

METRIC
WHOLE NUMBERS INDICATE MILLIMETRES
DECIMALIZED NUMBERS INDICATE METRES

LOCATION APPROVED
UNDERGROUND STRUCTURES

SUPR. U/G STRUCTURES COMMITTEE — DATE

NOTE:
LOCATION OF UNDERGROUND STRUCTURES AS SHOWN ARE BASED ON THE BEST INFORMATION AVAILABLE BUT NO GUARANTEE IS GIVEN THAT ALL EXISTING UTILITIES ARE SHOWN OR THAT THE GIVEN LOCATIONS ARE EXACT. CONFIRMATION OF EXISTENCE AND EXACT LOCATION OF ALL SERVICES MUST BE OBTAINED FROM THE INDIVIDUAL UTILITIES BEFORE PROCEEDING WITH CONSTRUCTION.

BM 78-009 — N.W. Cor. Paddington Rd. & Dakota St., 19 mm dia. x 6.1 m I.B. in Valve Box, 5.5 m S. of N.L. Paddington Rd. & on W.L. of Dakota St., in traffic island.
ELEV 232.749 m

No.	REVISIONS	YY/MM/DD	BY
B	ISSUED FOR TENDER	23/08/02	BAP
A	ISSUED FOR 95% REVIEW	23/06/27	BAP

MORRISON HERSHFIELD

DESIGNED BY	ALP	CHECKED BY	AGG
DRAWN BY	AH	APPROVED BY	BAP
HOR SCALE	AS SHOWN	RELEASED FOR CONSTRUCTION	
VERT SCALE	AS SHOWN		
DATE	JUNE 27, 2023	DATE	

PROFESSIONAL'S SEAL
PROVINCE OF MANITOBA — A.D.G. GILARSKI — Member — 32144 — 2023-06-02 — REGISTERED PROFESSIONAL ENGINEER

CONSULTANT FILE NAME
2203665-CBR DD-RAIL03.dwg

ENGINEERS GEOSCIENTISTS MANITOBA
Certificate of Authorization
MORRISON HERSHFIELD
No. 1736

TENDER No. 335-2023

Winnipeg
THE CITY OF WINNIPEG
PUBLIC WORKS DEPARTMENT
ENGINEERING DIVISION

CREEK BEND ROAD BRIDGE REPLACEMENT AND RELATED WORKS

NW RETAINING WALL
BICYCLE RAILING DETAILS 2 OF 2

CITY DRAWING NUMBER: B149-23-42
SHEET 42 OF 52
DRAWING NUMBER: 42

ISO A1 - 594mm x 841mm
X:\Proj\2022\2203665\0-CdW 293-2022 Creek Bend Road Bri\09. CAD\07 Sheets\Structural\Detailed Design\2203665-CBR DD-RAIL03.dwg Last Saved: 8/1/2023 2:16 PM by AHepper Plotted: 8/2/2023 3:56 PM by Alex Hepper