B SIZE – 279mm x 432mm

LAST SAVE: 2023/03/02 – 4:21pm
PATH: \\Winpdc1\proj$\691232\4ENG\48IC\DD – General DWG\1-0118F-A0017-001_Rev00.dwg

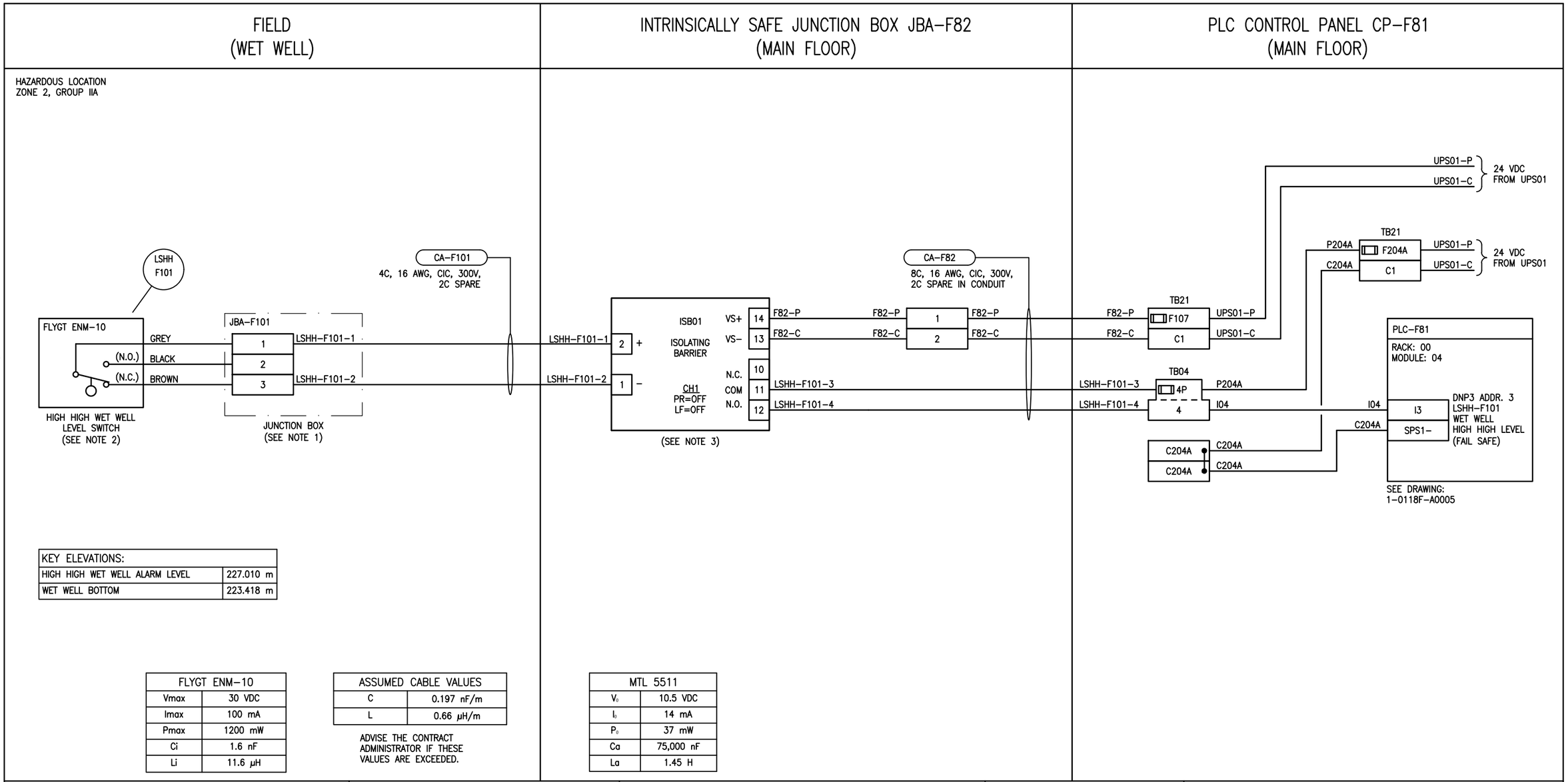

KEY ELEVATIONS:	
HIGH HIGH WET WELL ALARM LEVEL	227.010 m
WET WELL BOTTOM	223.418 m

FLYGT ENM-10	
Vmax	30 VDC
Imax	100 mA
Pmax	1200 mW
Ci	1.6 nF
Li	11.6 µH

ASSUMED CABLE VALUES	
C	0.197 nF/m
L	0.66 µH/m

ADVISE THE CONTRACT ADMINISTRATOR IF THESE VALUES ARE EXCEEDED.

MTL 5511	
V_0	10.5 VDC
I_0	14 mA
P_0	37 mW
Ca	75,000 nF
La	1.45 H

NOTES:

1. PROVIDE AND INSTALL NEW NEMA TYPE 4X JUNCTION BOX WITH TERMINALS AND IDENTIFICATION LAMACOID.
2. EXACT ELEVATION TO BE DETERMINED DURING CONSTRUCTION.
3. REFER TO DRAWING 1-0118F-A0013 JUMPER DETAILS, FOR ADDITIONAL CONNECTIONS TO THE POWER TERMINALS (VS+ & VS–).

ENGINEERS GEOSCIENTISTS MANITOBA
Certificate of Authorization
SNC-Lavalin Inc.
No. 4489

NO.	REVISIONS	DATE	DESIGN	CHECK
00	ISSUED FOR CONSTRUCTION, TENDER 167-2023	2023/03/02	MS	BC

SNC·LAVALIN

SNC-LAVALIN INC.
148 Nature Park Way
Winnipeg, MB, Canada R3P 0X7
204-786-8080

DESIGNED BY: M. SARIC	CHECKED BY: B. CLEVEN
DRAWN BY: M. SARIC	APPROVED BY: B. CLEVEN
SCALE: N.T.S.	DATE: 2022/07/06
ISSUED FOR CONSTRUCTION BY: K. ZUREK	DATE: 2023/03/02
CONSULTANT NO.:	

ENGINEER'S SEAL

PROVINCE OF MANITOBA
M. SARIC
Member
46571
REGISTERED PROFESSIONAL ENGINEER
2023-03-02

REV. 00

Winnipeg

THE CITY OF WINNIPEG
WATER AND WASTE DEPARTMENT

BANNATYNE FLOOD PUMPING STATION
2023 UPGRADES
LOOP DIAGRAM
WET WELL HIGH HIGH LEVEL
LSHH-F101

CITY DRAWING NUMBER	SHEET	REV.	SIZE
1-0118F-A0017	001	00	B