B SIZE – 279mm x 432mm

LAST SAVE: 2023/03/02 – 4:23pm
PATH: \\Winpdc1\proj$\691232\4ENG\48IC\DD – General DWG\1-0118F-A0023-001_Rev00.dwg

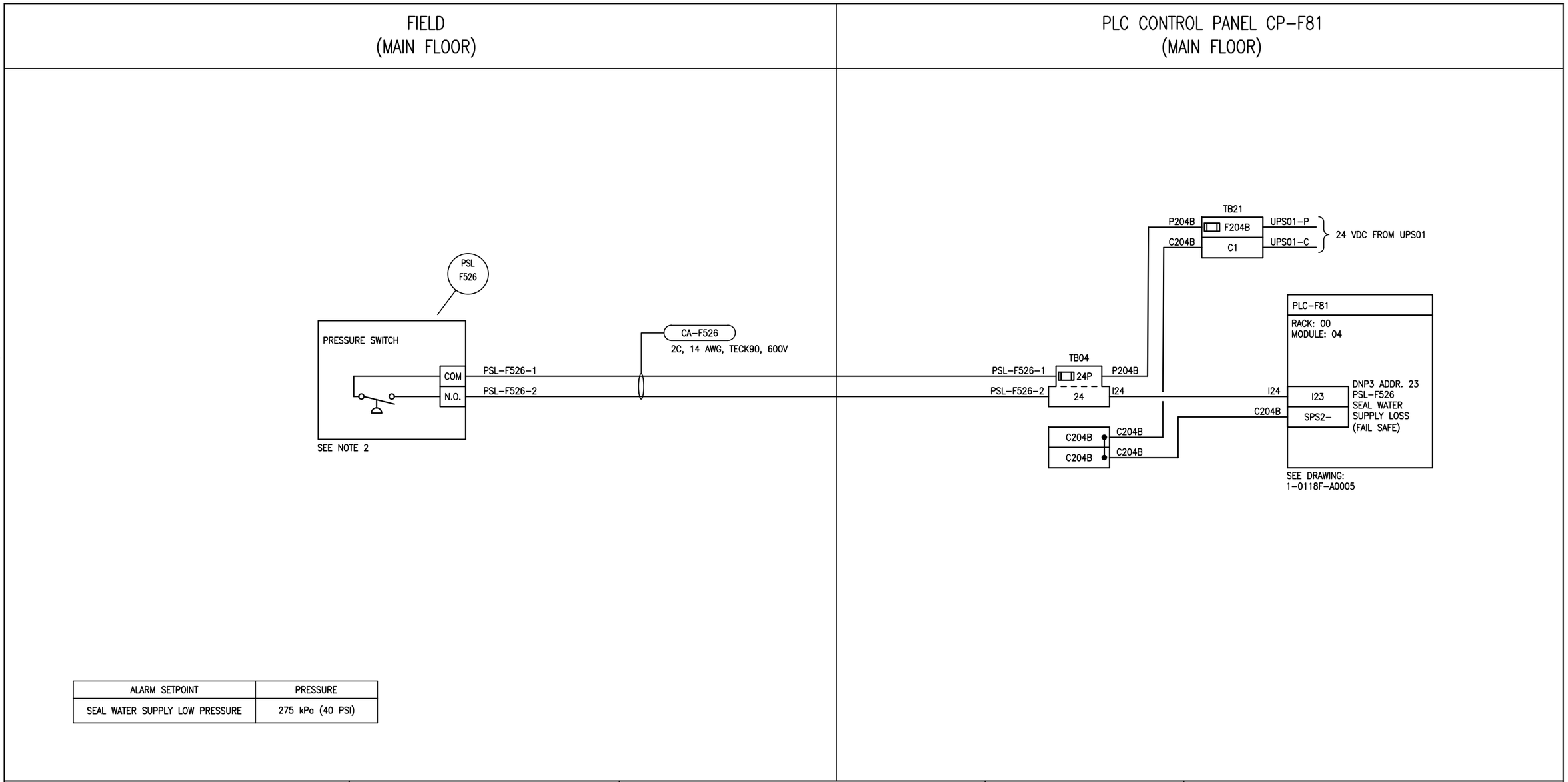

ALARM SETPOINT	PRESSURE
SEAL WATER SUPPLY LOW PRESSURE	275 kPa (40 PSI)

NOTES:

1. PROVIDED AND INSTALLED NEW PRESSURE SWITCH.
2. PRESSURE SWITCH CONTACT TO BE CLOSED DURING NORMAL OPERATION AND OPEN UPON A LOW PRESSURE CONDITION.

ENGINEERS GEOSCIENTISTS MANITOBA
Certificate of Authorization
SNC-Lavalin Inc.
No. 4489

NO.	REVISIONS	DATE	DESIGN	CHECK
00	ISSUED FOR CONSTRUCTION, TENDER 167-2023	2023/03/02	MS	BC

SNC·LAVALIN

SNC-LAVALIN INC.
148 Nature Park Way
Winnipeg, MB, Canada R3P 0X7
204-786-8080

DESIGNED BY: M. SARIC	CHECKED BY: B. CLEVEN
DRAWN BY: M. SARIC	APPROVED BY: B. CLEVEN
SCALE: N.T.S.	DATE: 2022/07/06
ISSUED FOR CONSTRUCTION BY: K. ZUREK	DATE: 2023/03/02
CONSULTANT NO.:	

ENGINEER'S SEAL

PROVINCE OF MANITOBA
M. SARIC
Member
46571
REGISTERED PROFESSIONAL ENGINEER
2023-03-02

REV 00

Winnipeg

THE CITY OF WINNIPEG

WATER AND WASTE DEPARTMENT

BANNATYNE FLOOD PUMPING STATION
2023 UPGRADES
LOOP DIAGRAM
SEAL WATER SUPPLY LOSS
PSL-F526

CITY DRAWING NUMBER	SHEET	REV.	SIZE
1-0118F-A0023	001	00	B