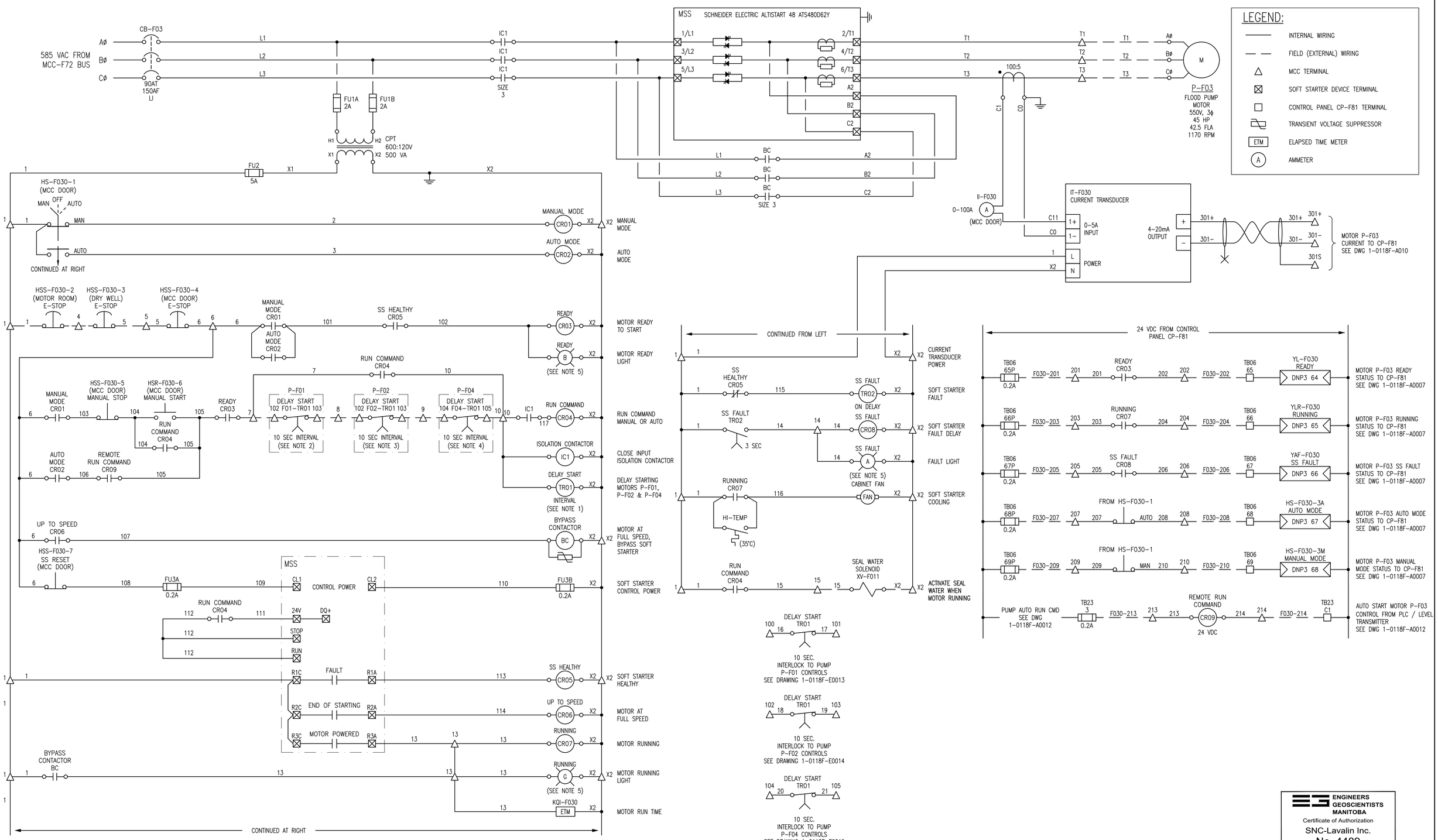

ENGINEERS GEOSCIENTISTS MANITOBA
Certificate of Authorization
SNC-Lavalin Inc.
No. 4489

DRAWING NUMBER	REFERENCE DRAWINGS
1-0118F-P0002	P&ID WASTEWATER FLOOD PUMPING
1-0118F-E0018	P-F03 CONNECTION DIAGRAM
1-0118F-E0005	ELECTRICAL SINGLE LINE DIAGRAM

GENERAL NOTES:

1. THE INTERVAL TIMING RELAY WAS INTERLOCKED WITH P-F01, P-F02 AND P-F04 MOTOR STARTERS TO PREVENT MULTIPLE PUMPS FROM STARTING AT THE SAME TIME AND POTENTIALLY TRIPPING OUT THE ENTIRE DISTRIBUTION.
2. THE TIMING INTERVAL CONTACT SHALL REMAIN CLOSED AND OPEN WHEN PUMP P-F01 ELECTRIC MOTOR IS STARTED. ONCE THE DELAY PERIOD IS FINISHED, THE TIMING INTERVAL CONTACT SHALL CLOSE.
3. THE TIMING INTERVAL CONTACT SHALL REMAIN CLOSED AND OPEN ONCE WHEN PUMP P-F02 ELECTRIC MOTOR IS STARTED. ONCE THE DELAY PERIOD IS FINISHED, THE TIMING INTERVAL CONTACT SHALL CLOSE.
4. THE TIMING INTERVAL CONTACT SHALL REMAIN CLOSED AND OPEN ONCE WHEN PUMP P-F04 ELECTRIC MOTOR IS STARTED. ONCE THE DELAY PERIOD IS FINISHED, THE TIMING INTERVAL CONTACT SHALL CLOSE.
5. LIGHT WAS MOUNTED ON MCC DOOR AND HAS A PUSH-TO-TEST FEATURE WIRED IN THAT WAS NOT SHOWN ON THIS DRAWING.

NO.	REVISIONS	DATE	DESIGN	CHECK
00	ISSUED FOR CONSTRUCTION, TENDER 167-2023	2023/03/02	MS	BC

SNC·LAVALIN
SNC-LAVALIN INC.
148 Nature Park Way
Winnipeg, MB, Canada R3P 0X7
204-786-8080

DESIGNED BY: M. SARIC	CHECKED BY: B. CLEVEN
DRAWN BY: M. SARIC	APPROVED BY: B. CLEVEN
SCALE: N.T.S.	ISSUED FOR CONSTRUCTION BY: K. ZUREK
DATE: 2022/11/28	DATE: 2023/03/02
CONSULTANT NO.:	

ENGINEER'S SEAL
PROVINCE OF MANITOBA
M. SARIC Member 46571
REGISTERED PROFESSIONAL ENGINEER
2023-03-02

REV. 00

Winnipeg
THE CITY OF WINNIPEG
WATER AND WASTE DEPARTMENT

BANNATYNE FLOOD PUMPING STATION
2023 UPGRADES
MOTOR STARTER SCHEMATIC
FLOOD PUMP
P-F03

CITY DRAWING NUMBER	SHEET	REV.	SIZE
1-0118F-E0017	001	00	A1

1-0118F-E0017-001_Rev00.dwg

A1 SIZE - 594mm x 841mm

LAST SAVE: 2023/03/02 - 4:02pm
PATH: \\Winpdc1\proj$\691232\4ENG\47ELE\DD - General DWG\1-0118F-E0017-001_Rev00.dwg