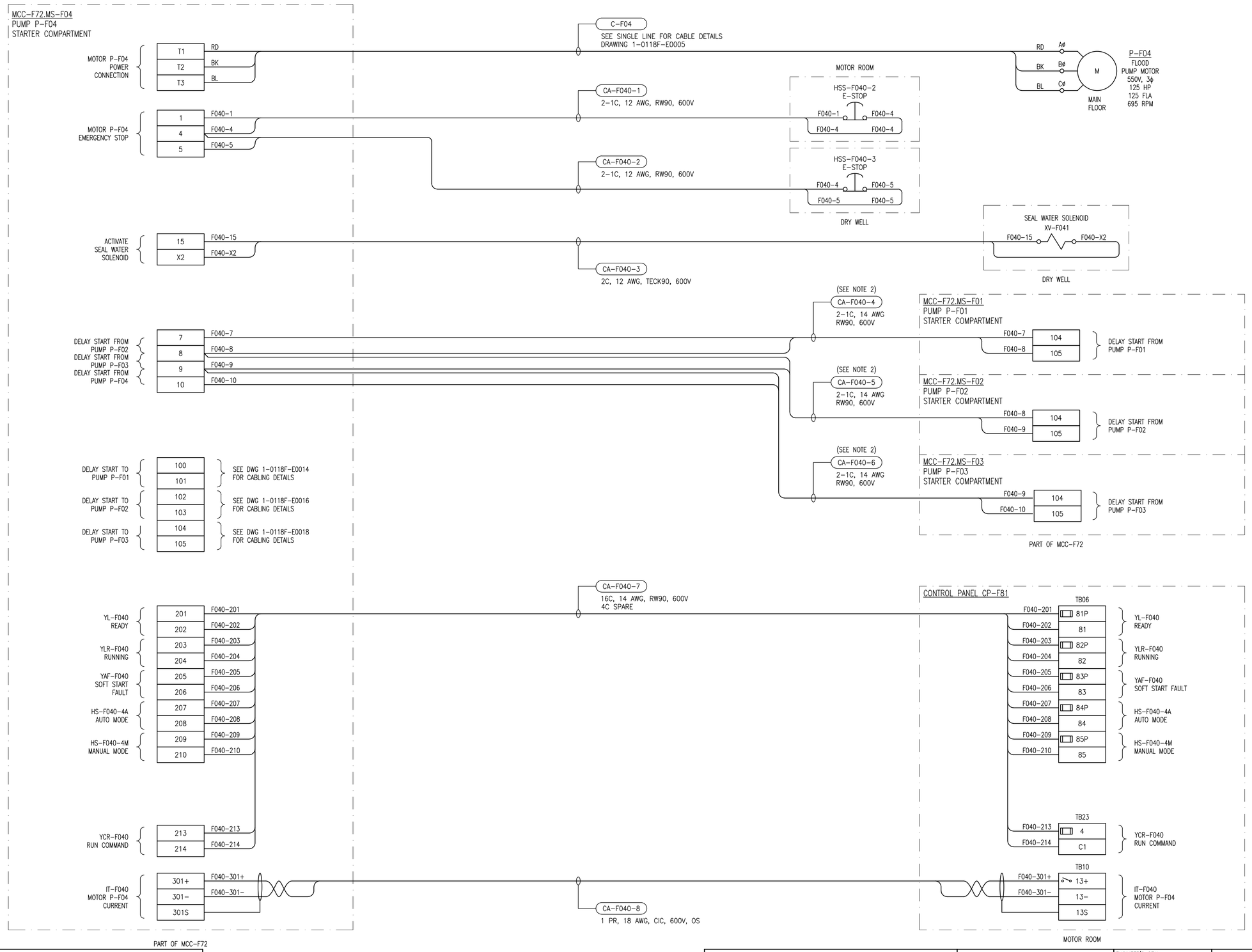


ENGINEERS GEOSCIENTISTS MANITOBA
Certificate of Authorization
SNC-Lavalin Inc.
No. 4489

| DRAWING NUMBER | REFERENCE DRAWINGS |
|---|---|
| 1-0118F-P0002 | P&ID WASTEWATER FLOOD PUMPING |
| 1-0118F-E0019 | MOTOR STARTER SCHEMATIC P-F04 FLOOD PUMP |
| 1-0118F-E0005 | ELECTRICAL SINGLE LINE DIAGRAM |

## GENERAL NOTES:

1. ALL FIELD CABLING SHOWN ON THIS DRAWING IS NEW, TO BE INSTALLED UNLESS OTHERWISE INDICATED. PROVIDE AND INSTALL CONDUIT FOR FIELD CABLING.
2. CABLE TO BE PROVIDED AND INSTALLED BY THE MCC MANUFACTURER.
3. NOT ALL MCC BUCKET TERMINALS ARE SHOWN.

| NO. | REVISIONS | DATE | DESIGN | CHECK |
|---|---|---|---|---|
| 00 | ISSUED FOR CONSTRUCTION, TENDER 167-2023 | 2023/03/02 | MS | BC |

SNC·LAVALIN
SNC-LAVALIN INC.
148 Nature Park Way
Winnipeg, MB, Canada R3P 0X7
204-786-8080

| | |
|---|---|
| DESIGNED BY: M. SARIC | CHECKED BY: B. CLEVEN |
| DRAWN BY: M. SARIC | APPROVED BY: B. CLEVEN |
| SCALE: N.T.S. | ISSUED FOR CONSTRUCTION BY: K. ZUREK |
| DATE: 2022/07/15 | DATE: 2023/03/02 |
| CONSULTANT NO.: | |

ENGINEER'S SEAL
PROVINCE OF MANITOBA
M. SARIC
Member
46571
REGISTERED PROFESSIONAL ENGINEER
2023-03-02
REV. 00

Winnipeg
THE CITY OF WINNIPEG
WATER AND WASTE DEPARTMENT

BANNATYNE FLOOD PUMPING STATION
2023 UPGRADES
CONNECTION DIAGRAM
FLOOD PUMP
P-F04

| CITY DRAWING NUMBER | SHEET | REV. | SIZE |
|---|---|---|---|
| 1-0118F-E0020 | 001 | 00 | A1 |

1-0118F-E0020-001_Rev00.dwg

A1 SIZE - 594mm x 841mm

LAST SAVE: 2023/03/02 - 4:03pm
PATH: \\Winpdc1\proj$\691232\4ENG\47ELE\DD - General DWG\1-0118F-E0020-001_Rev00.dwg