A1 SIZE – 594mm x 841mm

ELEMENTARY DIAGRAM:

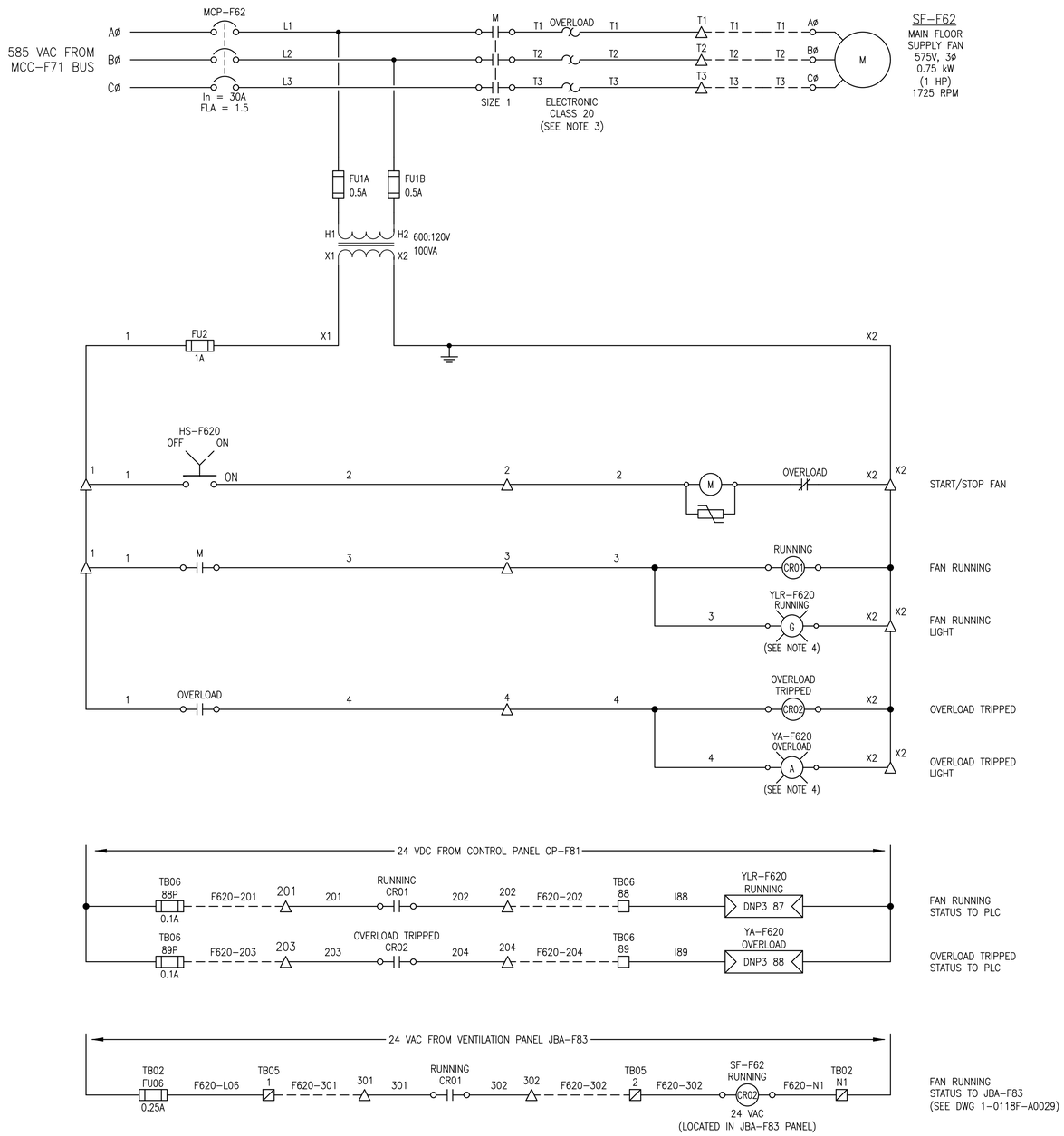

FIELD CONNECTION DIAGRAM:

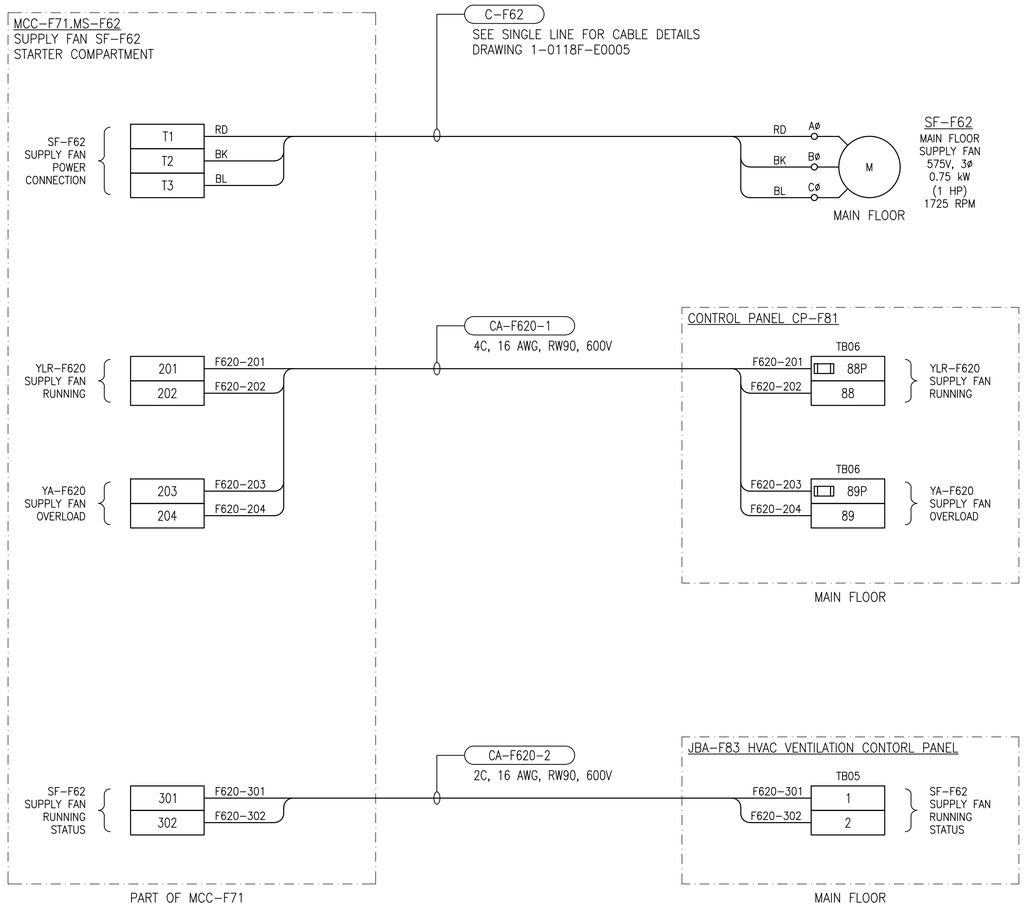

ELEMENTARY DIAGRAM LEGEND:

- INTERNAL WIRING
- FIELD (EXTERNAL) WIRING
- MCC TERMINAL
- CONTROL PANEL CP–F81 TERMINAL
- VENTILATION PANEL JBA–F83 TERMINAL
- INDICATING LIGHT, G = GREEN, A = AMBER
- PLC INPUT

DRAWING NUMBER	REFERENCE DRAWINGS
1–0118F–E0005	ELECTRICAL SINGLE LINE DIAGRAM
1–0118F–A0029	MAIN FLOOR DAMPER CONTROL FV–F601, FV–F602 & FV–F603

GENERAL NOTES:

1. ALL FIELD CABLING SHOWN ON THIS DRAWING IS NEW UNLESS OTHERWISE INDICATED. PROVIDE AND INSTALL CONDUIT FOR FIELD CABLING.
2. NOT ALL MCC BUCKET TERMINALS ARE SHOWN.
3. OVERLOAD SHALL BE RESET WITH A MANUAL PUSH BUTTON RESET (LOCATED ON MCC DOOR).
4. LIGHT IS MOUNTED ON MCC DOOR AND SHALL CONTAIN PUSH–TO–TEST FEATURE WIRED (NOT SHOWN ON THIS DRAWING).

ENGINEERS GEOSCIENTISTS MANITOBA
Certificate of Authorization
SNC-Lavalin Inc.
No. 4489

NO.	REVISIONS	DATE	DESIGN	CHECK
00	ISSUED FOR CONSTRUCTION, TENDER 167–2023	2023/03/02	MS	BC

SNC·LAVALIN

SNC–LAVALIN INC.
148 Nature Park Way
Winnipeg, MB, Canada R3P 0X7
204–786–8080

DESIGNED BY: M. SARIC	CHECKED BY: B. CLEVEN
DRAWN BY: M. SARIC	APPROVED BY: B. CLEVEN
SCALE: N.T.S.	ISSUED FOR CONSTRUCTION BY: K. ZUREK
DATE: 2022/12/02	DATE: 2023/03/02
CONSULTANT NO.:	

ENGINEER'S SEAL
PROVINCE OF MANITOBA
M. SARIC
Member
46571
REGISTERED PROFESSIONAL ENGINEER
2023/03/02

Winnipeg
THE CITY OF WINNIPEG
WATER AND WASTE DEPARTMENT

BANNATYNE FLOOD PUMPING STATION
2023 UPGRADES
MOTOR STARTER SCHEMATIC
AND CONNECTION DIAGRAM
MAIN FLOOR SUPPLY FAN SF–F62

CITY DRAWING NUMBER	SHEET	REV.	SIZE
1–0118F–E0021	001	00	A1

REV. 00

LAST SAVE: 2023/03/02 – 4:04pm
PATH: \\Winpdc1\proj$\691232\4ENG\47ELE\DD – General DWG\1–0118F–E0021–001_Rev00.dwg