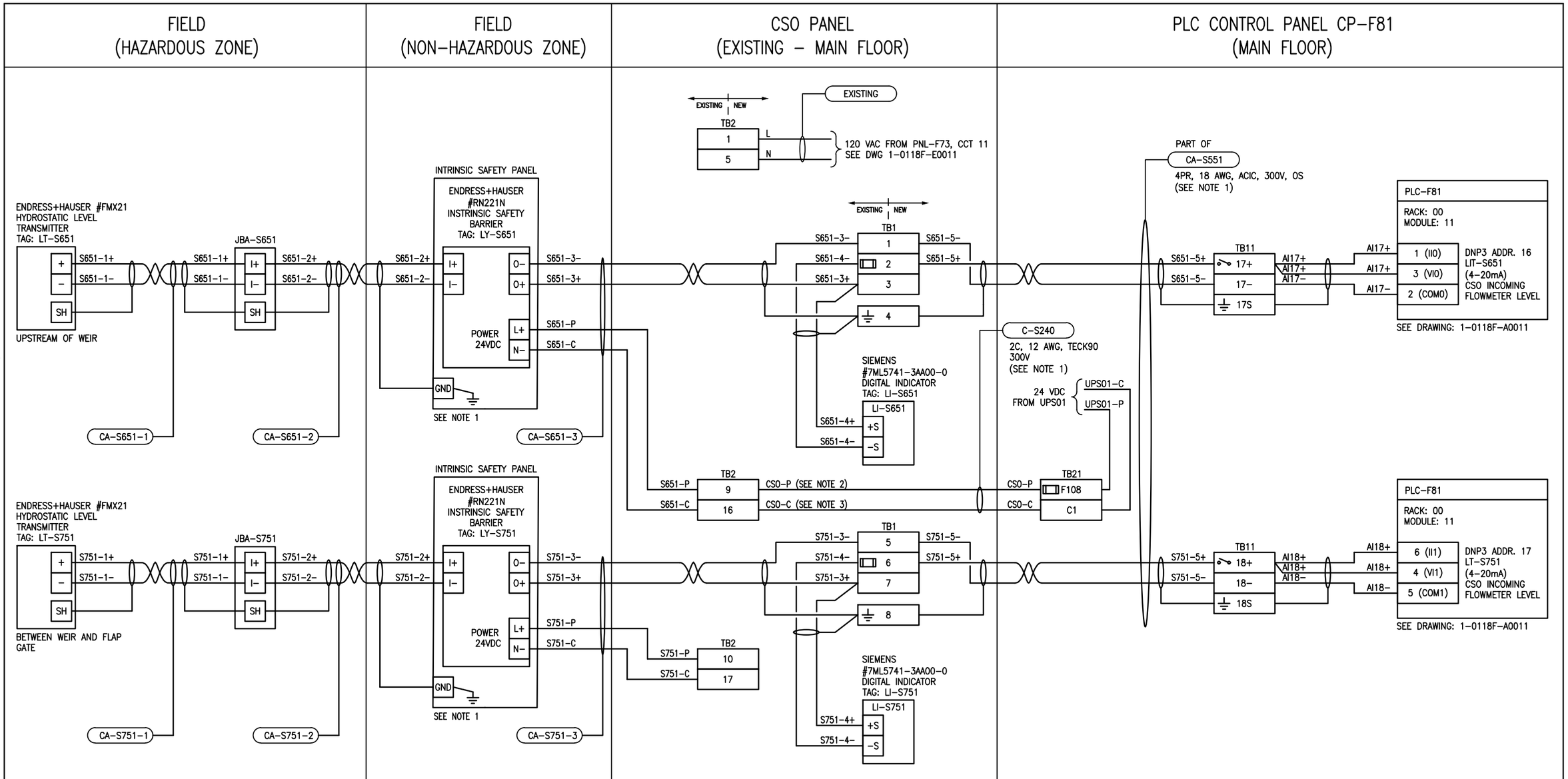

NOTES:

1. PROVIDE NEW WIRING BETWEEN EXISTING CSO PANEL AND CONTROL PANEL CP-F81.
2. CONNECT TO TB2-9 IN CSO PANEL. DEMOLISH EXISTING CONDUCTOR LABELLED "+24VDC" IN CSO PANEL BETWEEN 24VDC POWER SUPPLY AND TERMINAL TB2-9.
3. CONNECT TO TB2-16 IN CSO PANEL. DEMOLISH EXISTING CONDUCTOR LABELLED "0VDC" IN COS PANEL BETWEEN 24VDC POWER SUPPLY AND TERMINAL TB2-16.
4. NOT ALL EXISTING CSO PANEL CONNECTIONS WERE DEPICTED, SEE DRAWING 1-0118-A-A0203-001 FOR ADDITIONAL DETAILS.

ENGINEERS GEOSCIENTISTS MANITOBA
Certificate of Authorization
SNC-Lavalin Inc.
No. 4489

NO.	REVISIONS	DATE	DESIGN	CHECK
00	ISSUED FOR CONSTRUCTION, TENDER 167-2023	2023/03/02	MS	BC

SNC·LAVALIN

SNC-LAVALIN INC.
148 Nature Park Way
Winnipeg, MB, Canada R3P 0X7
204-786-8080

DESIGNED BY: M. SARIC	CHECKED BY: B. CLEVEN
DRAWN BY: M. SARIC	APPROVED BY: B. CLEVEN
SCALE: N.T.S.	DATE: 2022/07/06
ISSUED FOR CONSTRUCTION BY: K. ZUREK	DATE: 2023/03/02
CONSULTANT NO.:	

ENGINEER'S SEAL

PROVINCE OF MANITOBA
M. SARIC
Member
46571
REGISTERED PROFESSIONAL ENGINEER
2023-03-02

REV. 00

Winnipeg

THE CITY OF WINNIPEG

WATER AND WASTE DEPARTMENT

BANNATYNE FLOOD PUMPING STATION
2023 UPGRADES
LOOP DIAGRAM
CSO PANEL
LT-S651, LT-S751, LIT-S951, ZT-S851

CITY DRAWING NUMBER	SHEET	REV.	SIZE
1-0118F-A0025	001	00	B

B SIZE – 279mm x 432mm

LAST SAVE: 2023/03/02 – 4:24pm
PATH: \\Winpdc1\proj$\691232\4ENG\48IC\DD – General DWG\1-0118F-A0025-001_Rev00.dwg