B SIZE – 279mm x 432mm

LAST SAVE: 2023/03/02 – 4:26pm
PATH: \\Winpdc1\proj$\691232\4ENG\48IC\DD – General DWG\1-0118F-A0031-001_Rev00.dwg

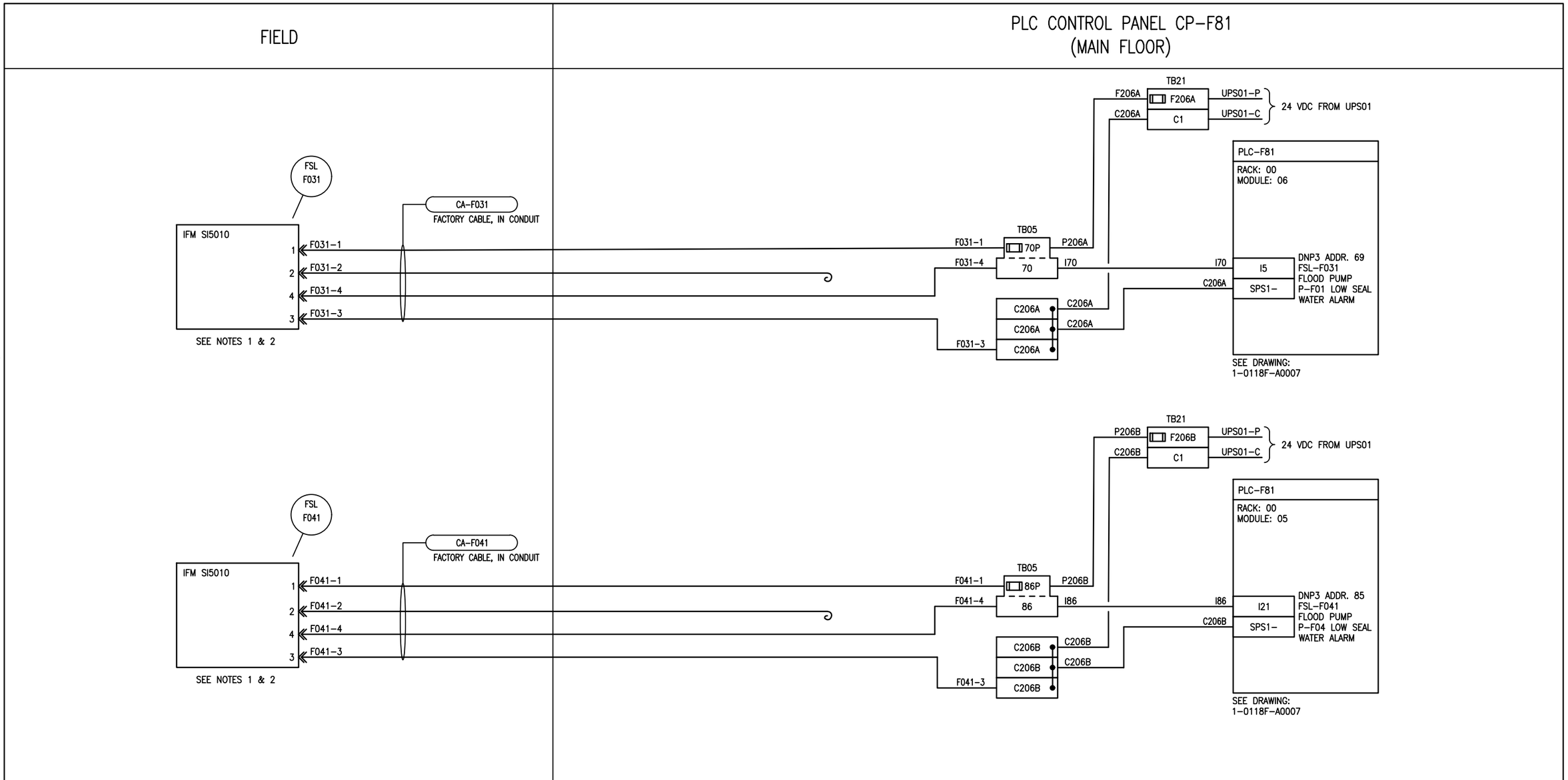

NOTES:

1. SOFTWARE INTEGRATOR TO SET AN 8 SECOND SOFTWARE DELAY WITHIN THE PLC WHEN LOW FLOW HAS BEEN DETECTED.
2. FLOW SWITCH OUTPUT (PIN 4) IS OFF WHEN NO FLOW IS PRESENT AND ON WHEN FLOW IS PRESENT.
3. FOR P-F03, SEE DRAWING 1-0118F-E0017 AND 1-0118F-E0018 FOR SEAL WATER SOLENOID SCHEMATIC AND CONNECTION DIAGRAM.
3. FOR P-F04, SEE DRAWING 1-0118F-E0019 AND 1-0118F-E0020 FOR SEAL WATER SOLENOID SCHEMATIC AND CONNECTION DIAGRAM.

ENGINEERS GEOSCIENTISTS MANITOBA
Certificate of Authorization
SNC-Lavalin Inc.
No. 4489

NO.	REVISIONS	DATE	DESIGN	CHECK
00	ISSUED FOR CONSTRUCTION, TENDER 167-2023	2023/03/02	MS	BC

SNC·LAVALIN

SNC-LAVALIN INC.
148 Nature Park Way
Winnipeg, MB, Canada R3P 0X7
204-786-8080

DESIGNED BY: M. SARIC	CHECKED BY: B. CLEVEN
DRAWN BY: M. SARIC	APPROVED BY: B. CLEVEN
SCALE: N.T.S.	DATE: 2022/11/24
ISSUED FOR CONSTRUCTION BY: K. ZUREK	DATE: 2023/03/02
CONSULTANT NO.:	

ENGINEER'S SEAL

PROVINCE OF MANITOBA
M. SARIC
Member
46571
REGISTERED PROFESSIONAL ENGINEER

REV. 00
2023-03-02

Winnipeg

THE CITY OF WINNIPEG
WATER AND WASTE DEPARTMENT

BANNATYNE FLOOD PUMPING STATION
2023 UPGRADES
LOOP DIAGRAM
P-F03 AND P-F04 LOW SEAL WATER ALARM
FSL-F031, FSL-F041

CITY DRAWING NUMBER	SHEET	REV.	SIZE
1-0118F-A0031	001	00	B