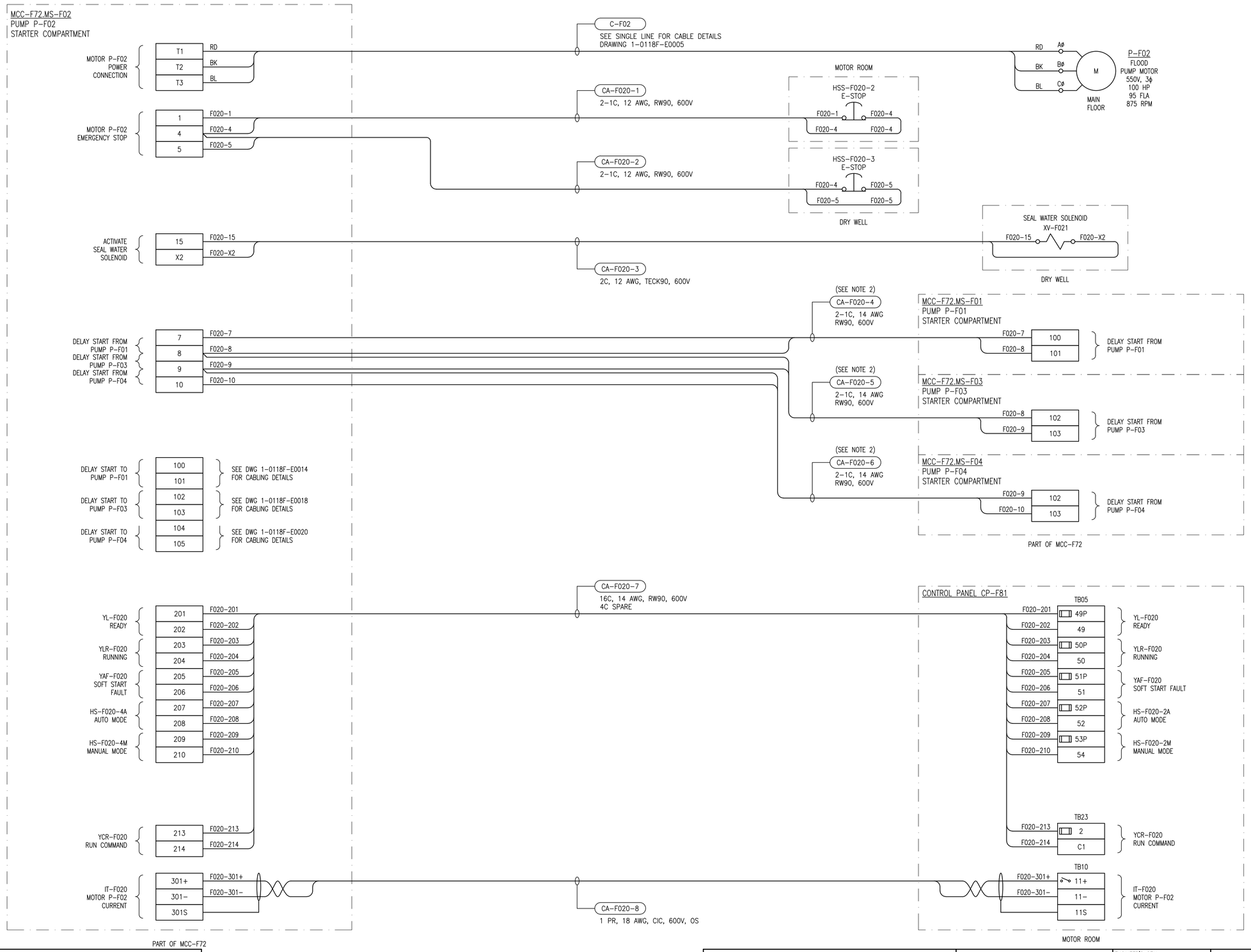

ENGINEERS GEOSCIENTISTS MANITOBA
Certificate of Authorization
SNC-Lavalin Inc.
No. 4489

DRAWING NUMBER	REFERENCE DRAWINGS
1-0118F-P0002	P&ID WASTEWATER FLOOD PUMPING
1-0118F-E0015	MOTOR STARTER SCHEMATIC P-F02 FLOOD PUMP
1-0118F-E0005	ELECTRICAL SINGLE LINE DIAGRAM

GENERAL NOTES:

1. ALL FIELD CABLING SHOWN ON THIS DRAWING IS NEW, TO BE INSTALLED UNLESS OTHERWISE INDICATED. PROVIDE AND INSTALL CONDUIT FOR FIELD CABLING.
2. CABLE TO BE PROVIDED AND INSTALLED BY THE MCC MANUFACTURER.
3. NOT ALL MCC BUCKET TERMINALS ARE SHOWN.

NO.	REVISIONS	DATE	DESIGN	CHECK
00	ISSUED FOR CONSTRUCTION, TENDER 167-2023	2023/03/02	MS	BC

SNC·LAVALIN
SNC-LAVALIN INC.
148 Nature Park Way
Winnipeg, MB, Canada R3P 0X7
204-786-8080

DESIGNED BY: M. SARIC	CHECKED BY: B. CLEVEN
DRAWN BY: M. SARIC	APPROVED BY: B. CLEVEN
SCALE: N.T.S.	ISSUED FOR CONSTRUCTION BY: K. ZUREK
DATE: 2022/11/25	DATE: 2023/03/02
CONSULTANT NO.:	

ENGINEER'S SEAL
PROVINCE OF MANITOBA
M. SARIC
Member
46571
REGISTERED PROFESSIONAL ENGINEER
2023-03-02
REV. 00

Winnipeg
THE CITY OF WINNIPEG
WATER AND WASTE DEPARTMENT

BANNATYNE FLOOD PUMPING STATION
2023 UPGRADES
CONNECTION DIAGRAM
FLOOD PUMP
P-F02

CITY DRAWING NUMBER	SHEET	REV.	SIZE
1-0118F-E0016	001	00	A1

A1 SIZE - 594mm x 841mm

LAST SAVE: 2023/03/02 - 4:01pm
PATH: \\Winpdc1\proj$\691232\4ENG\47ELE\DD - General DWG\1-0118F-E0016-001_Rev00.dwg

1-0118F-E0016-001_Rev00.dwg