PLAN
SCALE: 1:100

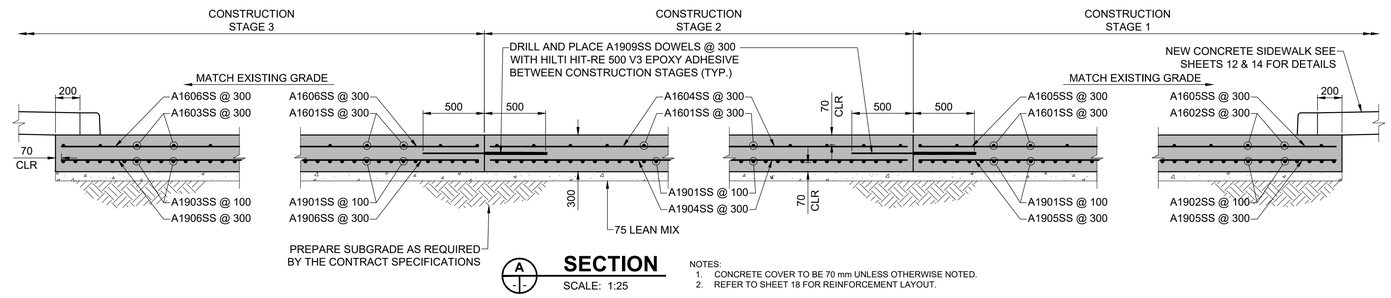

SECTION A
SCALE: 1:25

NOTES:
1. CONCRETE COVER TO BE 70 mm UNLESS OTHERWISE NOTED.
2. REFER TO SHEET 18 FOR REINFORCEMENT LAYOUT.

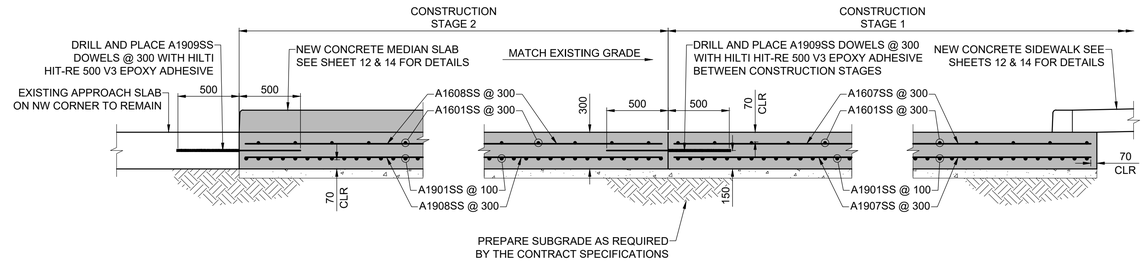

SECTION B
SCALE: 1:25

NOTES:
1. CONCRETE COVER TO BE 70 mm UNLESS OTHERWISE NOTED.
2. REFER TO SHEET 18 FOR REINFORCEMENT LAYOUT.

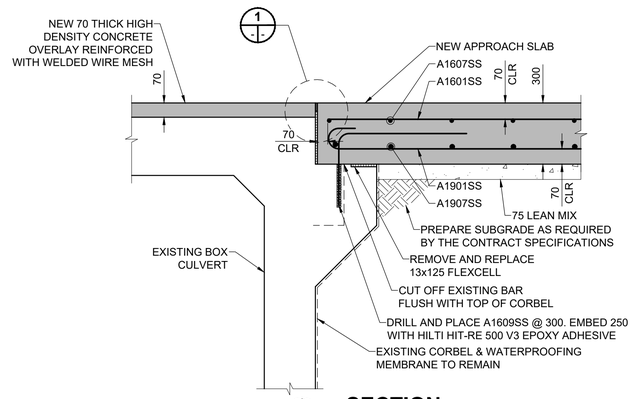

SECTION C
SCALE: 1:15

NOTE: CONCRETE COVER TO BE 70 mm UNLESSS OTHERWISE NOTED

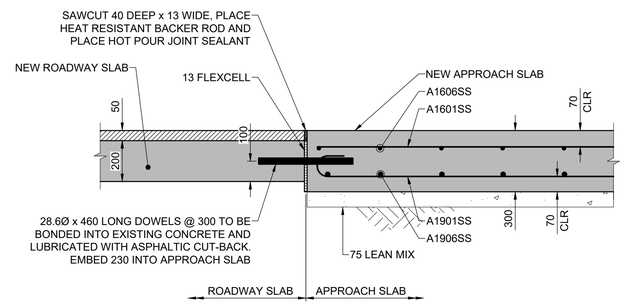

SECTION D
SCALE: 1:15

NOTE: CONCRETE COVER TO BE 70 mm UNLESSS OTHERWISE NOTED

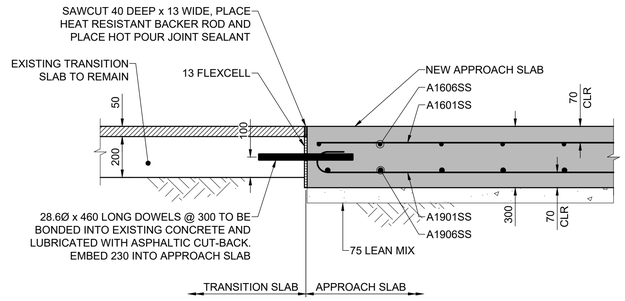

SECTION E
SCALE: 1:15

NOTE: CONCRETE COVER TO BE 70 mm UNLESSS OTHERWISE NOTED

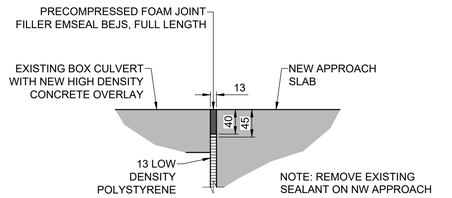

DETAIL 1
SCALE: 1:5

ENGINEERS GEOSCIENTISTS MANITOBA
Certificate of Authorization
MORRISON HERSHFIELD
No. 1736

TENDER No. 971-2022

LOCATION APPROVED
UNDERGROUND STRUCTURES

SUPR. U/G STRUCTURES COMMITTEE — DATE

NOTE:
LOCATION OF UNDERGROUND STRUCTURES AS SHOWN ARE BASED ON THE BEST INFORMATION AVAILABLE BUT NO GUARANTEE IS GIVEN THAT ALL EXISTING UTILITIES ARE SHOWN OR THAT THE GIVEN LOCATIONS ARE EXACT. CONFIRMATION OF EXISTENCE AND EXACT LOCATION OF ALL SERVICES MUST BE OBTAINED FROM THE INDIVIDUAL UTILITIES BEFORE PROCEEDING WITH CONSTRUCTION.

METRIC
WHOLE NUMBERS INDICATE MILLIMETRES
DECIMALIZED NUMBERS INDICATE METRES

BM 23-018 — S.E. Cor. Notre Dame Ave. & Sherwin Rd., Tblt. in W. Conc. foundation No. 2070 Notre Dame Ave., 0.8 m S. & 0.7 m below Conc. block of N.W. Cor. of bldg.
ELEV 235.300 m

No.	REVISIONS	YY/MM/DD	BY
0	ISSUED FOR TENDER	22/12/16	AGG

MORRISON HERSHFIELD

DESIGNED BY	AGG	CHECKED BY	TH
DRAWN BY	ALP	APPROVED BY	BE
HOR SCALE / VERT SCALE	AS SHOWN	RELEASED FOR CONSTRUCTION BY: VAIBHAV BANTHIA, P.ENG.	
DATE	22/03/14	DATE	22/12/16

PROFESSIONAL'S SEAL
PROVINCE OF MANITOBA — A.D.G. GILARSKI — Member 32144 — 2022-12-16 — REGISTERED PROFESSIONAL ENGINEER

CONSULTANT FILE NAME
220042500-Rte 90-Slab01.dwg

Winnipeg
THE CITY OF WINNIPEG
PUBLIC WORKS DEPARTMENT
ENGINEERING DIVISION

REHABILITATION OF ROUTE 90 CULVERT OVER OMAND'S CREEK

APPROACH SLAB DETAILS 1 OF 2

CITY DRAWING NUMBER: C315-21-17
SHEET 17 OF 27
DRAWING NUMBER: 17

ISO A1 - 594mm x 841mm
X:\Proj\2022\220042500-CdW Rte 90 Culvert Over Omands Cre\09. CAD\07 Sheets\220042500-Rte 90-Slab01.dwg Last Saved: 5/10/2022 12:33 PM by AHeppner Plotted: 12/15/2022 6:06 PM by Alex Heppner