GENERAL NOTES:

1. CONNECT FLYING LEADS CABLE OVERALL SHIELD TO TERMINAL 8S.
2. ALL SHIELD TERMINALS SHALL BE CONNECTED TO PANEL GROUND OR SHIELD BAR.

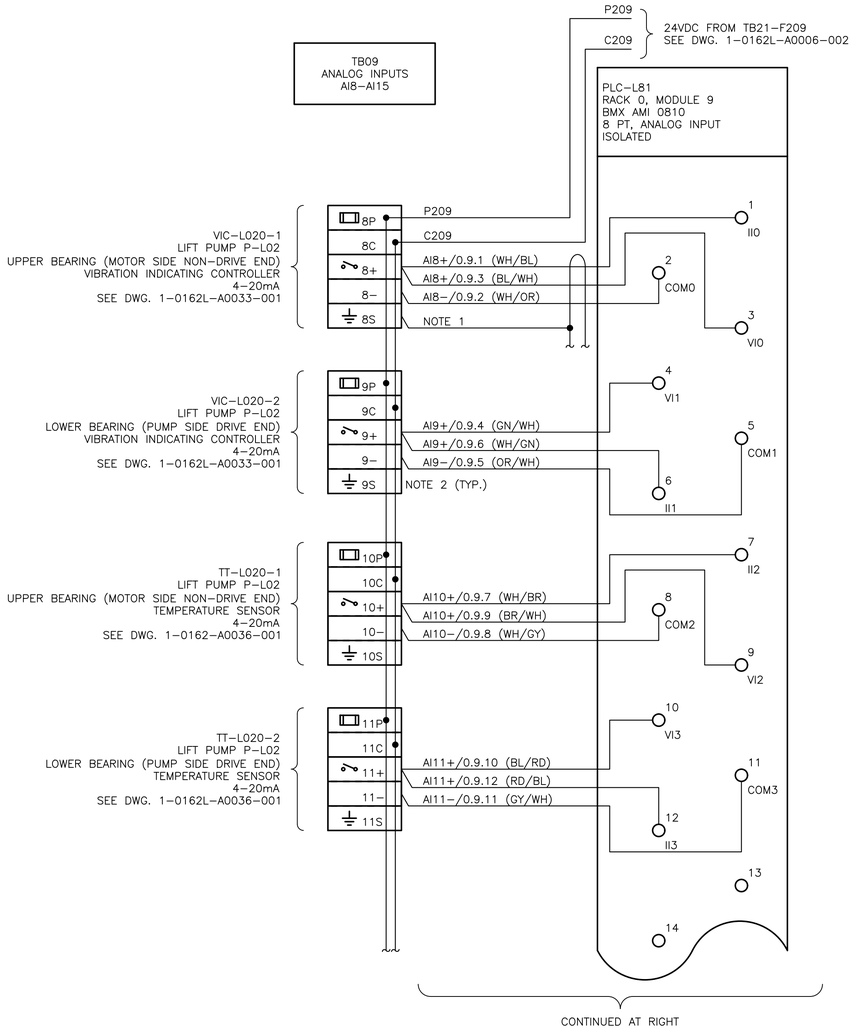

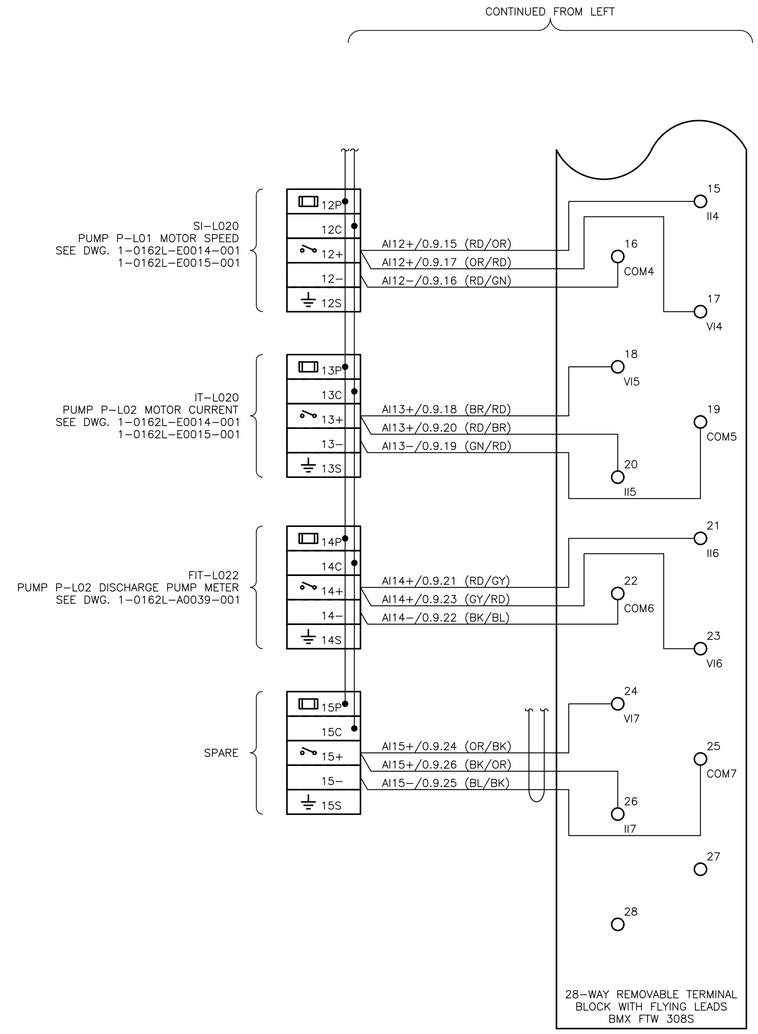

FUSE SCHEDULE			
TB	IDENTIFIER	SIZE	RATED CURRENT (A) FA
TB09	9P	5x20mm	1.00
	10P	5x20mm	1.00
	11P	5x20mm	1.00
	12P	5x20mm	1.00
	13P	5x20mm	1.00
	14P	5x20mm	1.00
	15P	5x20mm	1.00
	16P	5x20mm	1.00

NO.	DRAWING NUMBER	REFERENCE DRAWING TITLE
10	–	–
9	–	–
8	–	–
7	–	–
6	–	–
5	–	–
4	–	–
3	–	–
2	1–0162L–A0006–001	AUTOMATION POWER DISTRIBUTION SCHEMATIC PLC CONTROL PANEL CP–L81
1	1–0162L–A0004–001	AUTOMATION PANEL LAYOUT & BILL OF MATERIALS PLC CONTROL PANEL CP–L81

REFERENCE DRAWINGS

ENGINEERS GEOSCIENTISTS MANITOBA
Certificate of Authorization
KGS Group
No. 245

B.M.
ELEV.

NO.	REVISIONS	DATE (YYYY/MM/DD)	BY
0	ISSUED FOR CONSTRUCTION	2023 03 24	DDW

KGS GROUP

DESIGNED BY	A. NIRMAL	CHECKED BY	DDW
DRAWN BY	R. GASPAR	APPROVED BY	DDW
SCALE: HORIZONTAL	NTS	RELEASED FOR CONSTRUCTION	
VERTICAL	NTS		
DATE	2022/08/19	DATE	

PLOT DATE: 2023 03 23

ENGINEER'S SEAL
PROVINCE OF MANITOBA
D. WILSON
Member
22552
2023-03-23
REGISTERED PROFESSIONAL ENGINEER

CONSULTANT DRAWING NUMBER
22–0107–004–A12.01

BID OPPORTUNITY: 864-2022

Winnipeg

THE CITY OF WINNIPEG
WATER AND WASTE DEPARTMENT
ENGINEERING DIVISION

METCALFE LIFT PUMPING STATION
2022 UPGRADES
PLC I/O WIRING DIAGRAM

PLC CONTROL PANEL CP–L81
ANALOG INPUT RACK 0, MODULE 9

CITY DRAWING NUMBER 1–0162L–A0012–001

SHEET 17 OF 109

FILE PATH: P:\Projects\2022\22-0107-004\Dwg\Elec\
FILE NAME: 1-0162L-A0012-001.dwg