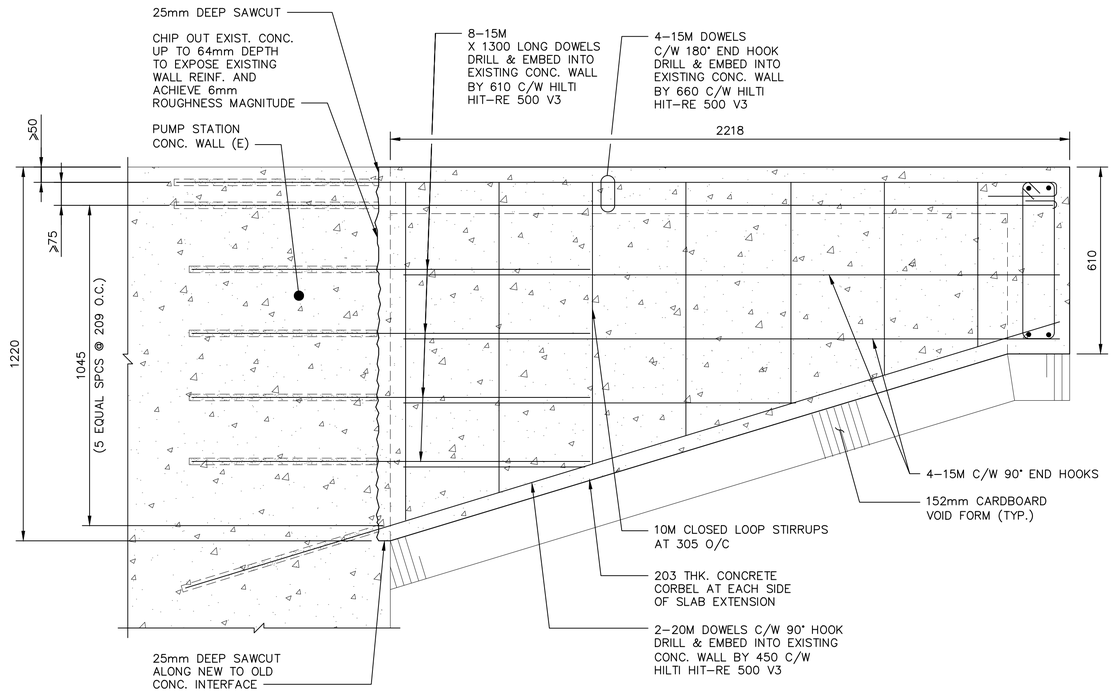

* REBAR INSTALLATION SHALL BE DONE BY TRAINED EMPLOYEES. SUBMIT HILTI CERTIFICATES FOR REVIEW.

A REF.1 SECTION – CORBEL C–1
SCALE: 1:10

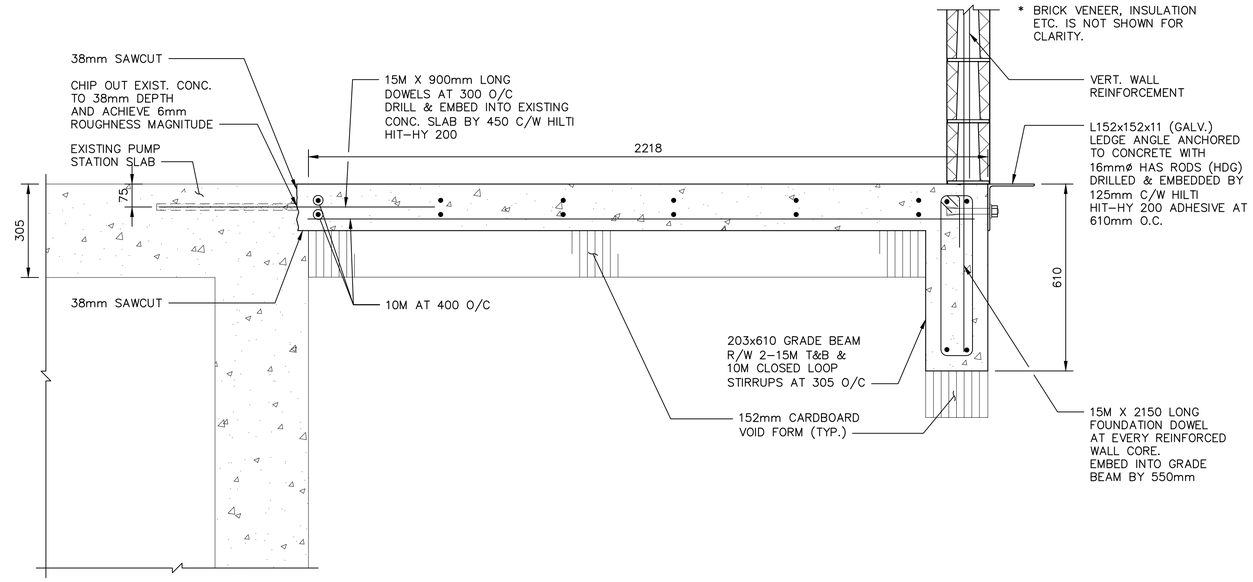

B REF.1 SECTION
SCALE: 1:10

DETAIL NOTES:

1. CAREFULLY SAWCUT AND CHIPOUT EXISTING CONCRETE AS INDICATED. CHIPPING HAMMER SHALL BE 6.81 kg (15 lbs). AVOID DAMAGING EXISTING REINFORCING.
2. COMPLETE REBAR SCANNING ON THE SIDE OF THE EXISTING WALL TO ELEVATION OF 1400mm BELOW THE TOP OF EXISTING CONCRETE. HORIZONTAL EXTENT OF SCANNING SHALL BE 3.8m AWAY FROM THE EDGE (FULL LENGTH OF EXIST. CONC.)
3. LAYOUT SCANNED REINFORCING AND PROPOSED LOCATIONS OF NEW REINFORCING HOLES. MAINTAIN MIN. 50mm CONCRETE EDGE DISTANCE FOR NEW HOLES, MIN. 50mm SPACING TO EXISTING REINF. AND MIN. 50mm SPACING BETWEEN NEW REINF. HOLES.
4. ARRANGE ON–SITE MEETING WITH ENGINEER TO REVIEW THE PROPOSED LAYOUT PRIOR TO DRILLING.

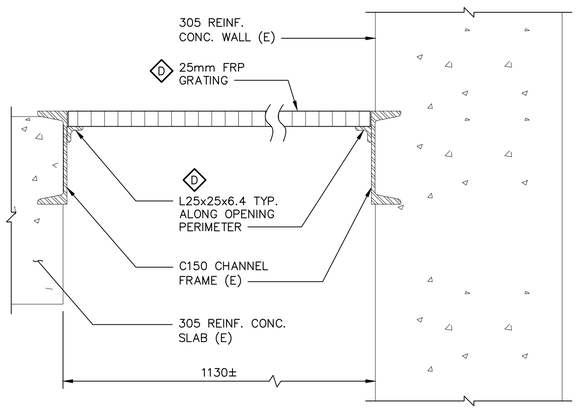

C REF.2, 4 FLOOR OPENING – DEMOLITION DETAIL
SCALE: 1:5

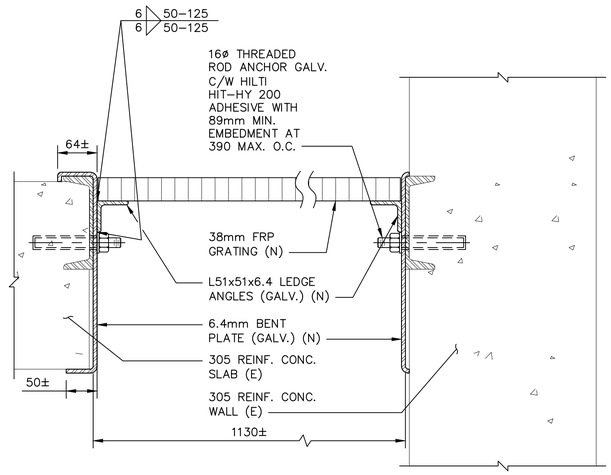

D REF.3 FLOOR OPENING – RETROFIT DETAIL
SCALE: 1:5

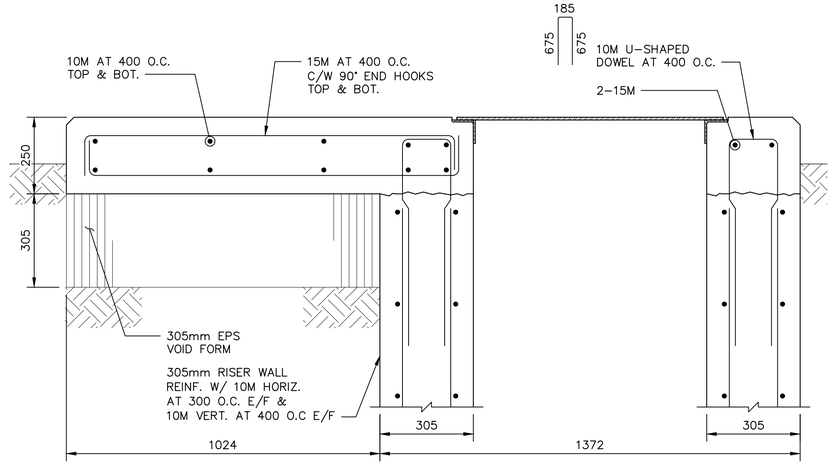

E REF.1 SECTION
SCALE: 1:10

LEGEND:

(E) –DENOTES EXISTING CONSTRUCTION.

(N) –DENOTES NEW CONSTRUCTION.

D –DEMOLITION

NO.	DRAWING NUMBER	REFERENCE DRAWING TITLE
10		
9		
8		
7		
6		
5		
4	1–0162L–B0002–002	PLANS – DEMOLITION
3	1–0162L–B0003–002	SUB–LEVEL 1, 2 & 3 FLOOR PLANS – NEW
2	1–0162L–B0002–001	PLAN & SECTIONS – DEMOLITION
1	1–0162L–S0002–001	FOUNDATION AND ROOF FRAMING PLAN

REFERENCE DRAWINGS

200 0 200 400 600 800
SCALE: 1:10

ENGINEERS GEOSCIENTISTS MANITOBA
Certificate of Authorization
KGS Group
No. 245

B.M.
ELEV.

NO.	REVISIONS	DATE (YYYY-MM-DD)	BY
0	ISSUED FOR CONSTRUCTION	2023 03 23	CMS

KGS GROUP

DESIGNED BY S. SUCHKOV
CHECKED BY CMS
DRAWN BY F. VALENCIA
APPROVED BY CMS
SCALE: HORIZONTAL AS SHOWN VERTICAL
RELEASED FOR CONSTRUCTION
DATE 2023 03 23
DATE
PLOT DATE: 2023 03 23

ENGINEER'S SEAL
PROVINCE OF MANITOBA S. SUCHKOV Member 34686 REGISTERED PROFESSIONAL ENGINEER
2023-03-23

CONSULTANT DRAWING NUMBER
22–0107–004_S07

BID OPPORTUNITY: 864-2022

Winnipeg
THE CITY OF WINNIPEG
WATER AND WASTE DEPARTMENT
ENGINEERING DIVISION

METCALFE LIFT PUMPING STATION
2022 UPGRADES
STRUCTURAL
DETAILS
NEW

CITY DRAWING NUMBER 1-0162L-S0004-001
SHEET 93 OF 109

FILE PATH: \\k-file-4\p-data\Projects\2022\22-0107-004\Dwg\Struct\