GENERAL NOTES:

1. CONNECT FLYING LEADS CABLE OVERALL SHIELD TO TERMINAL 32S.
2. ALL SHIELD TERMINALS SHALL BE CONNECTED TO PANEL GROUND OR SHIELD BAR.

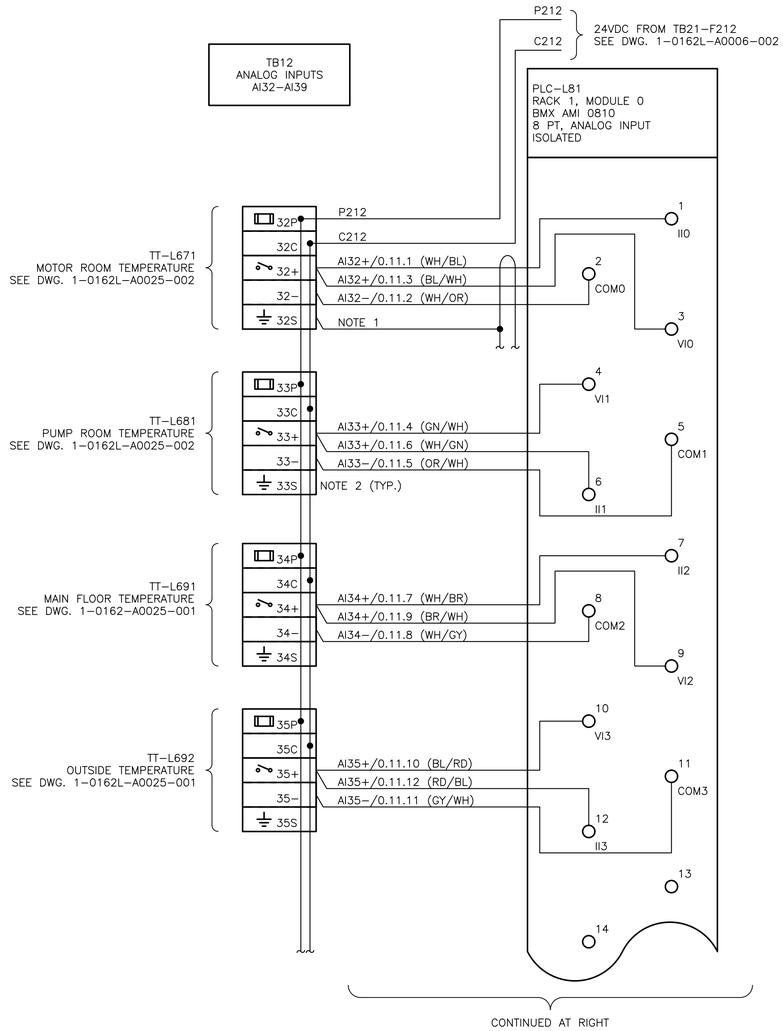

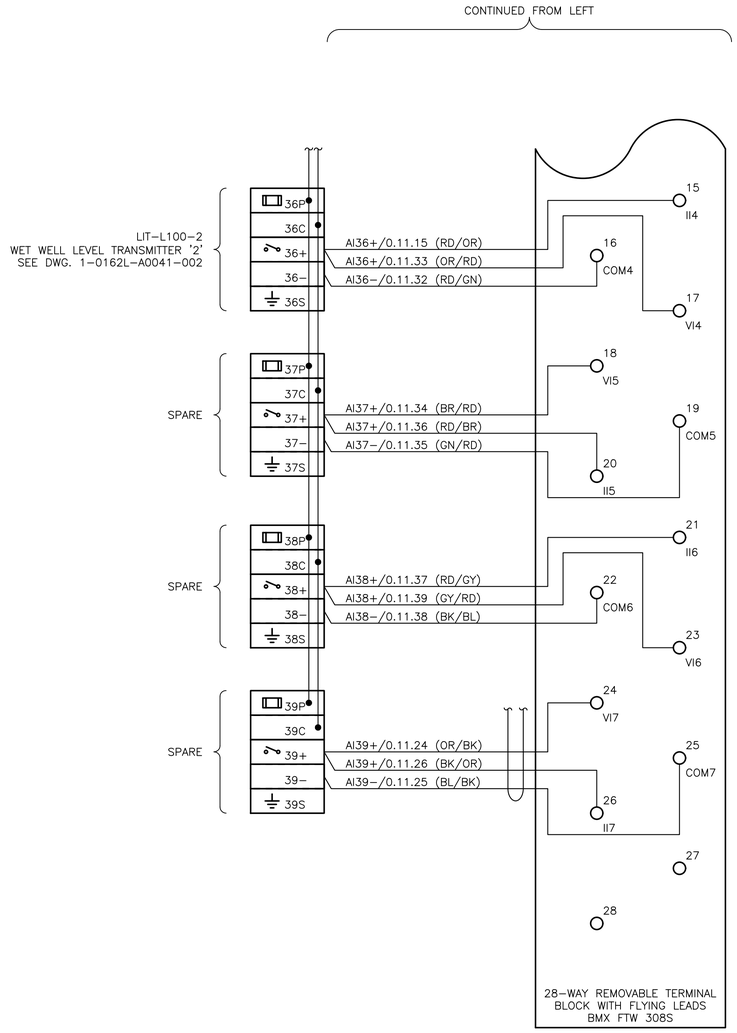

FUSE SCHEDULE			
TB	IDENTIFIER	SIZE	RATED CURRENT (A) FA
TB11	32P	5x36mm	1.00
	33P	5x36mm	1.00
	34P	5x36mm	1.00
	35P	5x36mm	1.00
	36P	5x36mm	1.00
	37P	5x36mm	1.00
	38P	5x36mm	1.00
	39P	5x36mm	1.00

NO.	DRAWING NUMBER	REFERENCE DRAWING TITLE
10	–	–
9	–	–
8	–	–
7	–	–
6	–	–
5	–	–
4	–	–
3	–	–
2	1–0162L–A0006–001	AUTOMATION POWER DISTRIBUTION SCHEMATIC PLC CONTROL PANEL CP–L81
1	1–0162L–A0004–001	AUTOMATION PANEL LAYOUT & BILL OF MATERIALS PLC CONTROL PANEL CP–L81

REFERENCE DRAWINGS

ENGINEERS GEOSCIENTISTS MANITOBA
Certificate of Authorization
KGS Group
No. 245

B.M.
ELEV.

NO.	REVISIONS	DATE (YYYY/MM/DD)	BY
0	ISSUED FOR CONSTRUCTION	2023 03 24	DDW

KGS GROUP

DESIGNED BY A. NIRMAL
CHECKED BY DDW
DRAWN BY R. GASPAR
APPROVED BY DDW
SCALE: HORIZONTAL NTS, VERTICAL NTS
RELEASED FOR CONSTRUCTION
DATE 2022/08/19
DATE
PLOT DATE: 2023 03 23

ENGINEER'S SEAL
PROVINCE OF MANITOBA
D. WILSON
Member
22552
2023-03-23
REGISTERED PROFESSIONAL ENGINEER

CONSULTANT DRAWING NUMBER
22–0107–004–A15.01

BID OPPORTUNITY: 864-2022

Winnipeg

THE CITY OF WINNIPEG
WATER AND WASTE DEPARTMENT
ENGINEERING DIVISION

METCALFE LIFT PUMPING STATION
3638 UPGRADES
PLC I/O WIRING DIAGRAM

PLC CONTROL PANEL CP–L81
ANALOG INPUT RACK 1, MODULE 0

CITY DRAWING NUMBER 1–0338L–A0015–001
SHEET 20 OF 109

FILE PATH: P:\Projects\2022\22-0107-004\Dwg\Elec\
FILE NAME: 1-0162L-A0015-001.dwg