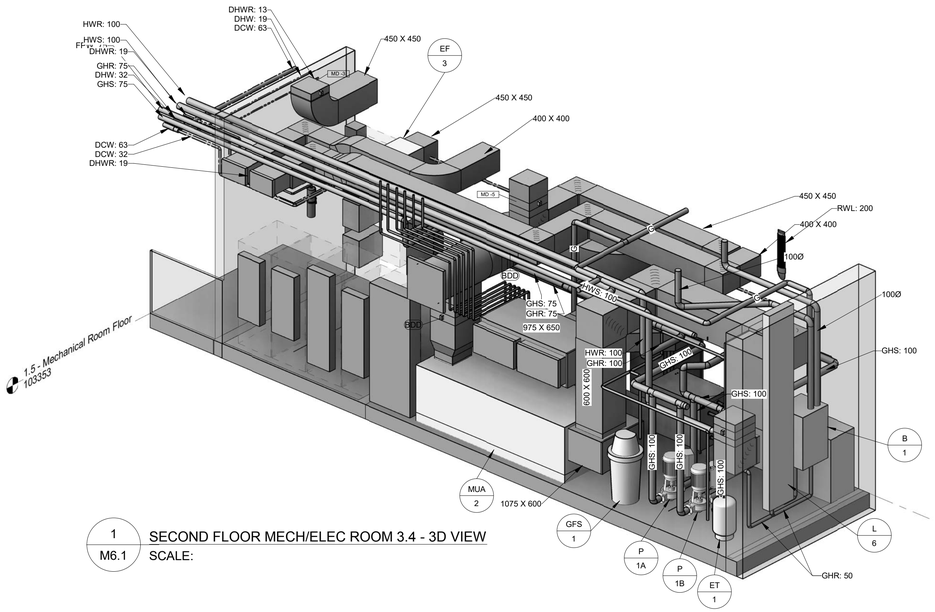

1 M6.1 SECOND FLOOR MECH/ELEC ROOM 3.4 - 3D VIEW
SCALE:

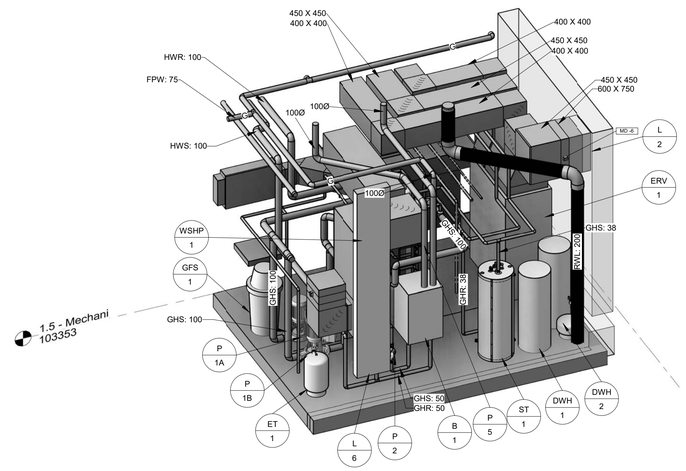

4 M6.1 SECOND FLOOR MECH/ELEC ROOM 3.4 - 3D VIEW
SCALE:

KEY NOTES

1 COMBUSTION AIR INTAKE FOR GAS FIRED BOILER UP THROUGH ROOF; TERMINATE IN ACCORDANCE WITH THE MANUFACTURERS INSTRUCTIONS.

2 FLUE FOR GAS FIRED BOILER UP THROUGH ROOF. TERMINATE FLUE IN ACCORDANCE WITH MANUFACTURERS INSTRUCTIONS.

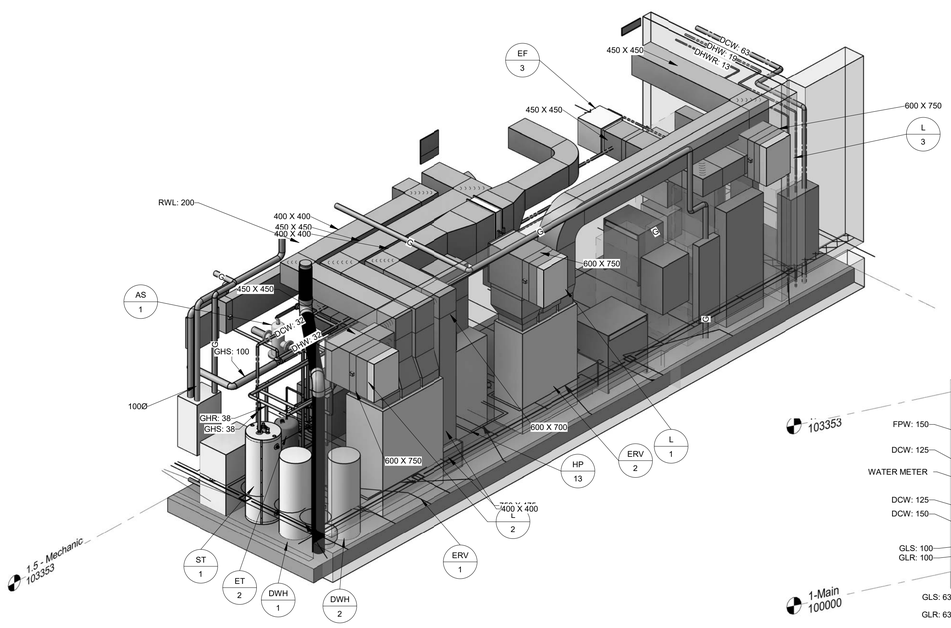

2 M6.1 SECOND FLOOR MECH/ELEC ROOM 3.4 - 3D VIEW
SCALE:

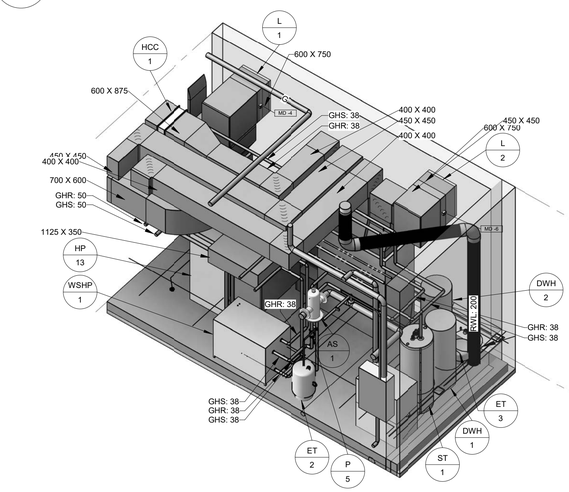

5 M6.1 WSHP-1 3D VIEW
SCALE:

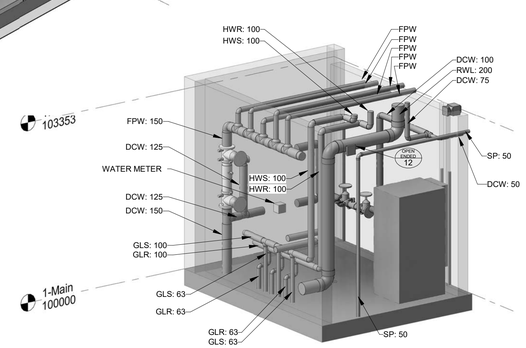

3 M6.1 MAIN FLOOR MECH ROOM 25 - 3D VIEW
SCALE:

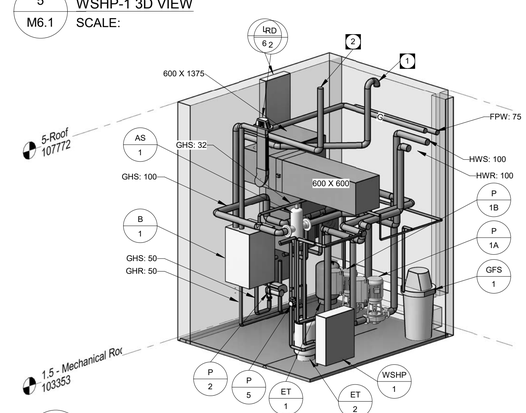

6 M6.1 B-1 3D VIEW
SCALE:

Cibinel
Architecture Ltd
560 ACADEMY ROAD WINNIPEG MB R3N 0E3
T. 204 989 8910

ARCHITECT

epp siepman engineering
400 - 136 Market Avenue
Winnipeg, MB R3B 0P4
T 204 453 1080

CONSULTANT

ENGINEERS GEOSCIENTISTS MANITOBA
Certificate of Authorization
Epp Siepman Engineering Inc.
No. 4035

This is a print of a document that has been electronically authenticated with technology authorized by the Engineers Geoscientists Manitoba. The original is in electronic form.

NO.	DATE	REVISION / ISSUANCE
0	2023.02.03	ISSUED FOR CONSTRUCTION

Seal

PROVINCE OF MANITOBA
D. A. SIEPMAN
Member
23527
23-02-03
REGISTERED PROFESSIONAL ENGINEER

Project
WFPS STATION 9

1083 AUTUMNWOOD DRIVE

Sheet Title
MECHANICAL 3D VIEWS & SECTIONS

Project No. 22028

Sheet M6.1

CIBINEL - Arch D - 24" X 36"