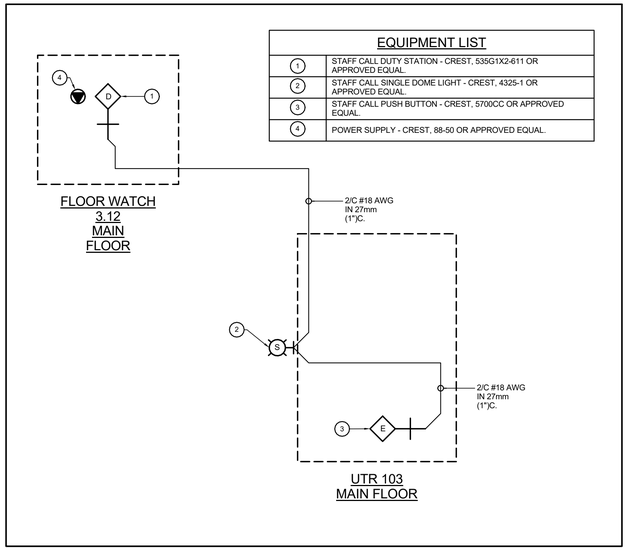

EQUIPMENT LIST	
1	STAFF CALL DUTY STATION - CREST, 535G1X2-611 OR APPROVED EQUAL.
2	STAFF CALL SINGLE DOME LIGHT - CREST, 4325-1 OR APPROVED EQUAL.
3	STAFF CALL PUSH BUTTON - CREST, 5700CC OR APPROVED EQUAL.
4	POWER SUPPLY - CREST, 88-50 OR APPROVED EQUAL.

UTR ASSIST SYSTEM

Cibinel
Architecture Ltd
560 ACADEMY ROAD WINNIPEG MB R3N 0E3
T. 204 989 8910

ARCHITECT

epp siepman engineering
400 - 136 Market Avenue
Winnipeg, MB R3B 0P4
T 204 453 1080

CONSULTANT

ENGINEERS GEOSCIENTISTS MANITOBA
Certificate of Authorization
Epp Siepman Engineering Inc.
No. 4035

This is a print of a document that has been electronically authenticated with technology authorized by the Engineers Geoscientists Manitoba. The original is in electronic form.

NO.	DATE	REVISION / ISSUANCE
0	2023-02-03	ISSUED FOR CONSTRUCTION

Seal

Project
WFPS STATION 9

1083 AUTUMNWOOD DRIVE

Sheet Title
ELECTRICAL DETAILS

Project No. 22028

Sheet E4.3