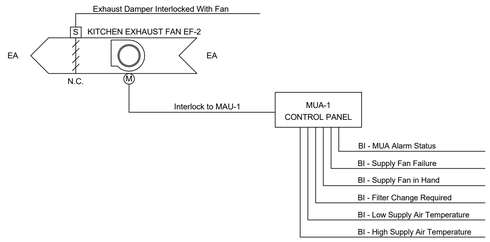

MUA-1 CONTROL SCHEMATIC TYPICAL

SCALE: N.T.S.

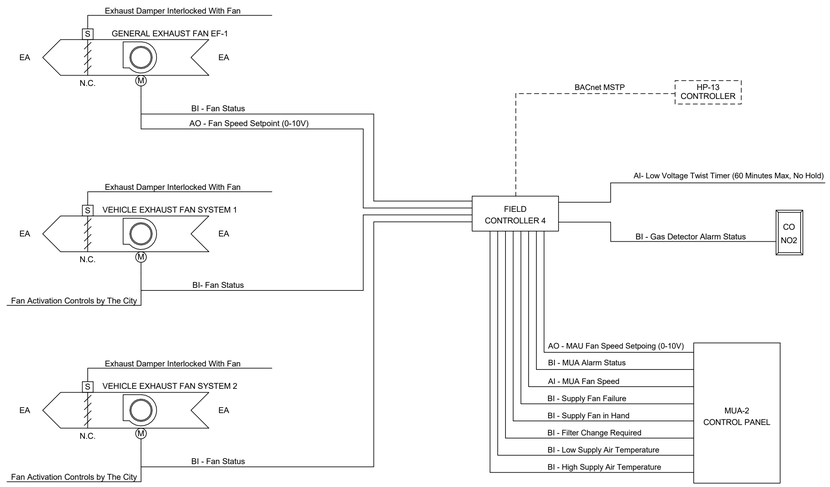

APPARATUS BAYS VENTILATION CONTROL SCHEMATIC

SCALE: N.T.S.

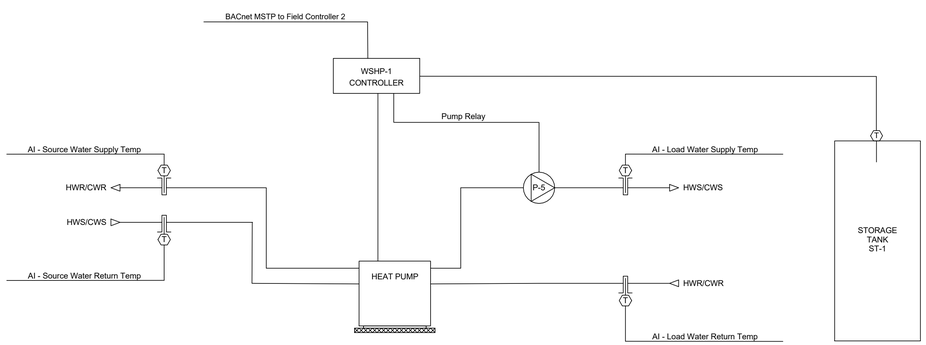

WATER-TO-WATER HEAT PUMP WSHP-1 CONTROL SCHEMATIC

SCALE: N.T.S.

NOTES:

1. NETWORK DIAGRAM IS SCHEMATIC AND IS INTENDED TO COMMUNICATE THE INTENT OF THE SYSTEM ARCHITECTURE AND DIVISION OF CONTROLS WORK BETWEEN THE CITY AND THE CONTRACTOR. ACTUAL NETWORK ARCHITECTURE AND THE NUMBER OF FIELD CONTROLLERS MAY VARY AS SHOWN.
2. CONTRACTOR TO PROVIDE CONTROLLERS COMPATIBLE WITH THE CITY'S JOHNSON CONTROLS SYSTEM, ACCORDING TO SPECIFICATIONS.

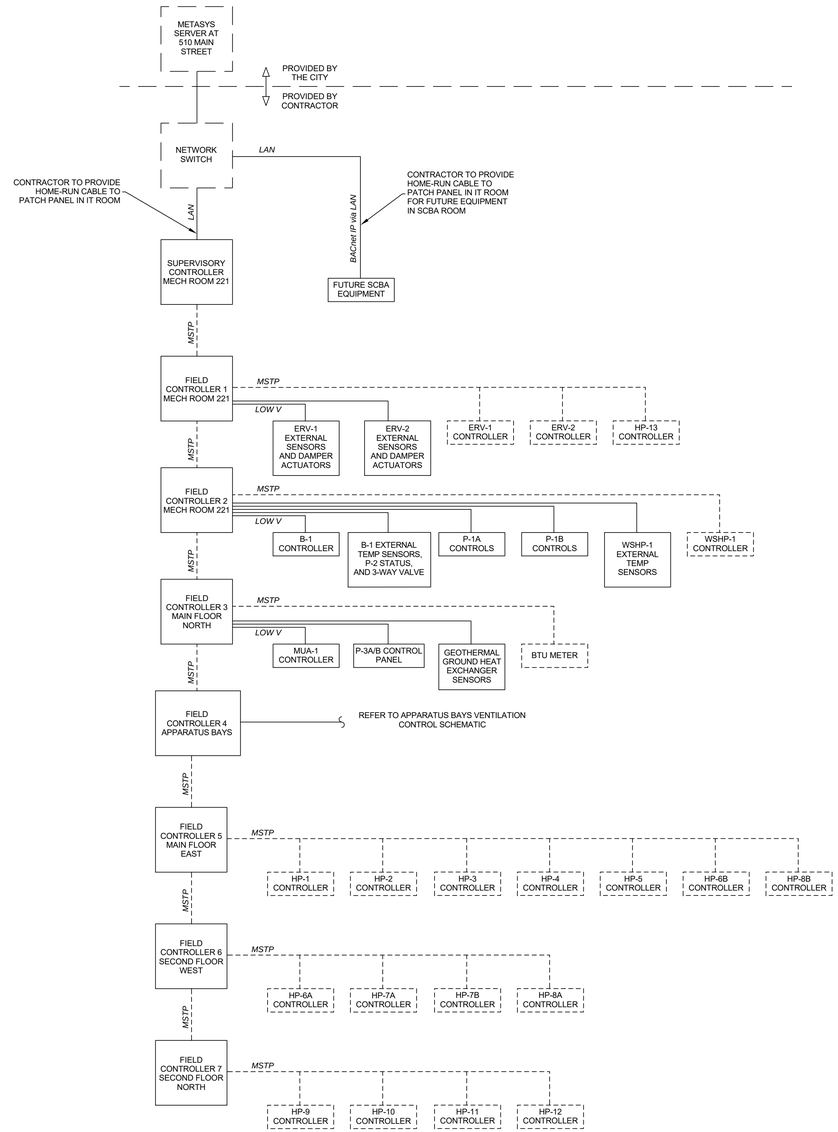

CONTROLS NETWORK DIAGRAM

SCALE: N.T.S.

Cibinel
Architecture Ltd

560 ACADEMY ROAD WINNIPEG MB R3N 0E3
T. 204 989 8910

ARCHITECT

epp siepman
engineering

400 - 136 Market Avenue
Winnipeg, MB R3B 0P4
T 204 453 1080

CONSULTANT

ENGINEERS
GEOSCIENTISTS
MANITOBA
Certificate of Authorization

Epp Siepman Engineering Inc.

No. 4035

This is a print of a document that has been electronically authenticated with technology authorized by the Engineers Geoscientists Manitoba. The original is in electronic form.

NO.	DATE	REVISION / ISSUANCE
0	2023.02.03	ISSUED FOR CONSTRUCTION

Seal

Project

WFPS STATION 9

1083 AUTUMNWOOD DRIVE

Sheet Title

MECHANICAL SCHEMATICS - CONTROLS

Project No. 22028

Sheet M5.3

CIBINEL - Arch D - 24" X 36"