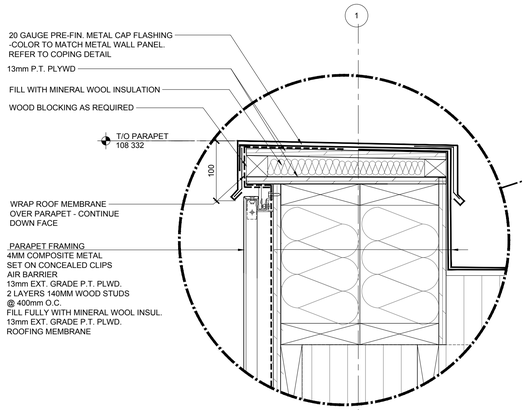

3.1 A504 WEST PARAPET DETAIL
1:5

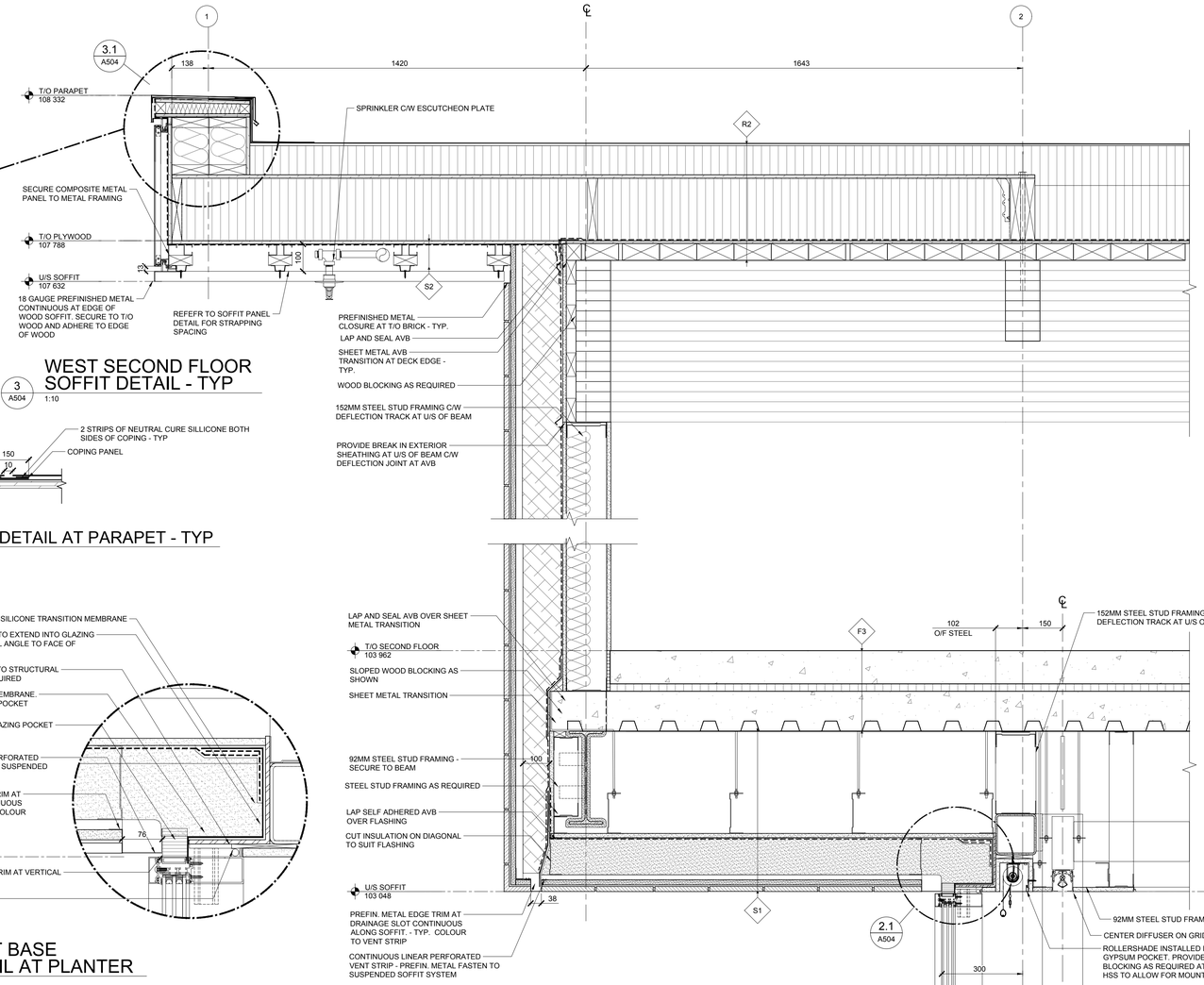

3 A504 WEST SECOND FLOOR SOFFIT DETAIL - TYP
1:10

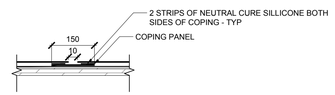

3.2 A504 COPING DETAIL AT PARAPET - TYP
1:10

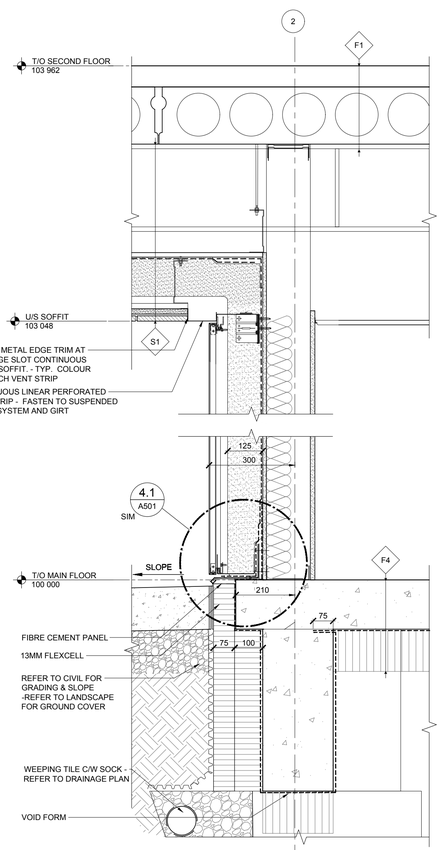

4 A504 WEST ELEVATION AT MWP BASE
1:10

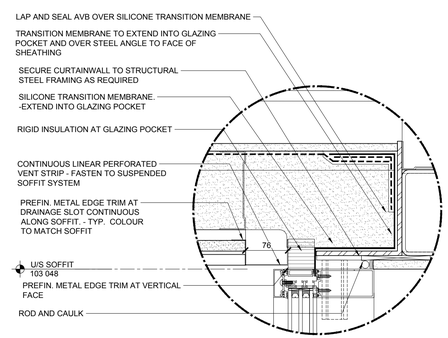

2.1 A504 WEST BASE DETAIL AT PLANTER
1:10

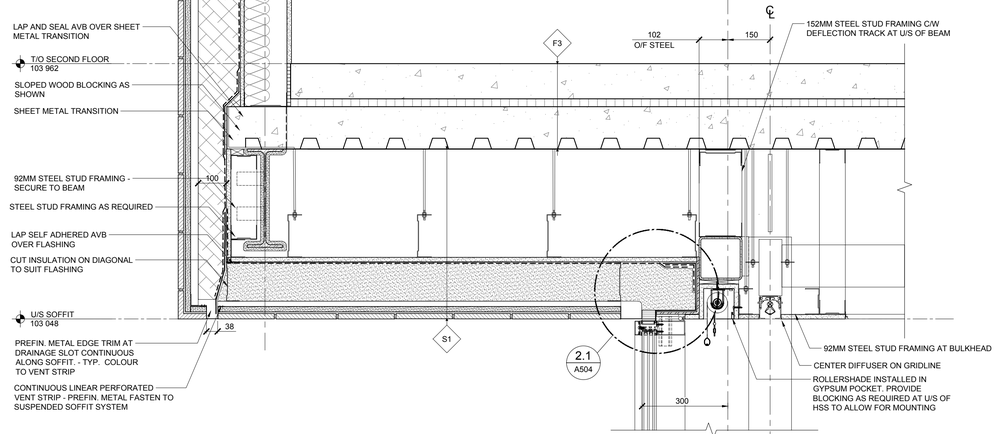

2 A504 WEST MAIN FLOOR SOFFIT DETAIL @ CW- TYP
1:10

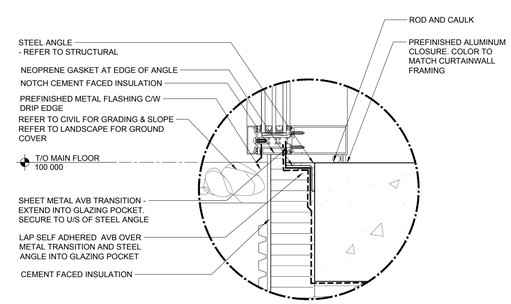

1.1 A504 WEST BASE DETAIL AT PLANTER - TYP
1:10

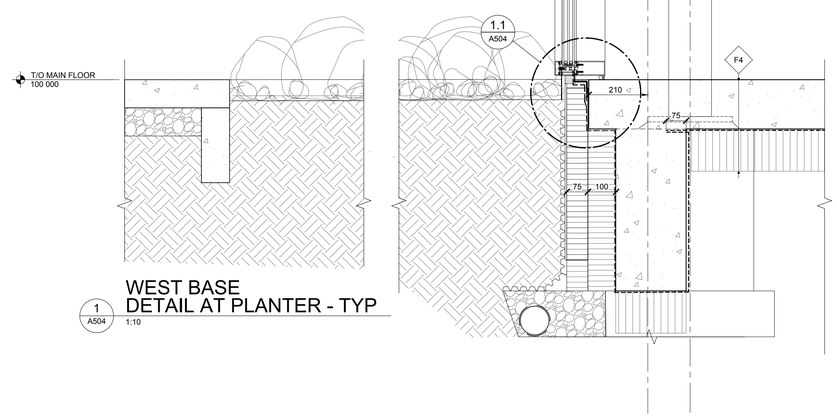

1 A504 WEST BASE DETAIL AT PLANTER - TYP
1:10

Cibinel Architecture Ltd
560 ACADEMY ROAD WINNIPEG MB R3N 0E3
T. 204 989 8910
ARCHITECT

NO.	DATE	REVISION / ISSUANCE
00	2023.02.03	ISSUED FOR CONSTRUCTION

Seal

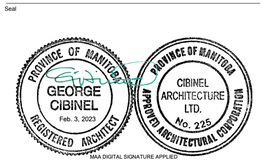

Project
WFPS STATION 9
1083 AUTUMNWOOD DRIVE

Sheet Title
SECTION DETAILS
WEST WALL

Project No. 2150
Sheet A504

CIBINEL - Arch D - 24" X 36"