A - 5x STRAIGHT PIPE DIAMETER
B - 4x STRAIGHT PIPE DIAMETER

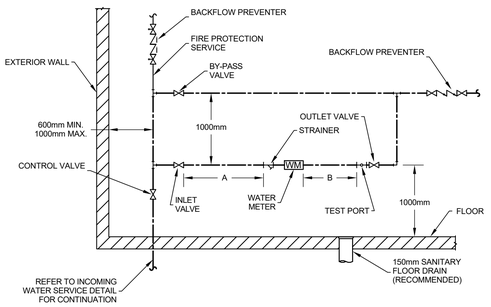

INSTALLATION DETAIL FOR COMPOUND, TURBINE OR ELECTROMAGNETIC TYPE WATER METER IN BUILDINGS 75mm & 250mm COMBINED OR DOMESTIC SERVICE PIPE

DOMESTIC WATER COMBINED SERVICE SINGLE METER WITH BY-PASS AND BACKFLOW PREVENTER DETAIL

SCALE: N.T.S.

NOTES:

1) ALL WATER METERS MUST BE INSTALLED IN A HORIZONTAL POSITION
2) ALL VALVES MUST BE FULLY OPENING GATE OR BALL VALVES BUTTERFLY OR ANGLE VALVES WILL NOT BE ACCEPTED
3) BY-PASS PIPING MAY BE INSTALLED IN THE HORIZONTAL OR VERTICAL ORIENTATION AROUND THE WATER METER THE INLET TEE MUST BE INSTALLED WITHIN 1000mm FROM THE FLOOR WHERE THE WATER SERVICE PIPE ENTERS THE BUILDING
4) ADEQUATE PIPE AND METER SUPPORT MUST BE PROVIDED. ELECTROMAGNETIC METERS MUST NOT BE DIRECTLY SUPPORTED. SUPPORT MUST BE PROVIDED IMMEDIATELY ADJACENT TO THE METER
5) WATER METER SIZE IS BASED ON FLOW DEMANDS SUPPLIED BY THE CUSTOMER. IF REQUIRED, CONCENTRIC PIPE REDUCERS MUST BE INSTALLED DIRECTLY TO THE INLET AND OUTLET VALVES. REDUCERS WILL ONLY BE REQUIRED IF THE WATER METER IS SIZED SMALLER THAN THE DOMESTIC SERVICE
6) PIPING, INCLUDING BY-PASS PIPING, MUST BE INSTALLED WITH A MINIMUM OF 600mm UNOBSTRUCTED CLEARANCE FROM ANY WALLS OR CEILINGS
7) METER ISOLATION VALVES (INLET AND OUTLET) MUST NOT BE USED TO THROTTLE FLOW TO THE PROPERTY
8) THE BY-PASS VALVE(S) MUST REMAIN CLOSED AT ALL TIMES AND MUST BE SEALED CLOSED BY THE WATER AND WASTE DEPARTMENT
9) A STRAINER WILL BE SUPPLIED AND INSTALLED WITH THE WATER METER AS REQUIRED. A STRAINER IS NOT REQUIRED WITH AN ELECTROMAGNETIC WATER METER
10) IF NECESSARY THE CITY WILL REMOVE OR REQUIRE THE REMOVAL OF INSULATION PREVENTING ACCESS TO THE METER
11) THE TEST PORT MUST BE EASILY ACCESSIBLE FOR THE PURPOSE OF CONNECTING A HOSE FROM THE PORT TO A PORTABLE TEST METER THEN TO THE FLOOR DRAIN. THE SOLE PURPOSE OF THIS PORT IS TO PERFORM A VOLUMETRIC ACCURACY TEST ON THE WATER METER IF REQUIRED
12) APPROVED BACKFLOW PREVENTION DEVICE, AS REQUIRED, IN ACCORDANCE WITH THE NATIONAL PLUMBING CODE (SPECIFIC HEIGHT REQUIREMENTS EXIST FOR BACKFLOW DEVICES WHICH DIFFER FROM THOSE SHOWN ON DRAWING)
13) ALL VALVES ON FIRE PROTECTION SYSTEMS MUST MEET CURRENT FIRE CODES AND REGULATIONS
14) WATER METERS MUST NOT BE INSTALLED IN CONFINED SPACES (EG. CRAWL SPACES). WHERE A SERVICE PIPE ENTERS A CONFINED SPACE THE WATER METER MUST BE INSTALLED IN THE IMMEDIATE ADJACENT SPACE INTENDED FOR CONTINUOUS OCCUPANCY. ALL WATER SERVICE PIPE ENTERING THE BUILDING TO THE WATER METER MUST BE CLEARLY VISIBLE FROM THE WATER METER WITHOUT ENTRY TO THE CONFINED SPACE (EG. ACCESS DOOR)

RECOMMENDATIONS:

1) WATER METER TO BE INSTALLED IN CLOSE PROXIMITY TO A FLOOR DRAIN (150mm SANITARY FLOOR DRAIN
2) PROVIDING UNOBSTRUCTED SPACE OF 1000mm WIDE BY 1000mm DEEP BY 2000mm HIGH. CENTERED IN FRONT OF THE WATER METER, WILL BE DEEMED COMPLIANT WITH THE ACCESS REQUIREMENTS OF THE WATER BY-LAW
3) THE INSTALLATION OF A CONTROL VALVE AS SHOWN (PRIOR TO THE INLET AND BY-PASS VALVE) IS RECOMMENDED. THE SINGLE VALVE ALLOWS FOR THE WATER TO BE TURNED OFF IN THE EVENT OF AN EMERGENCY

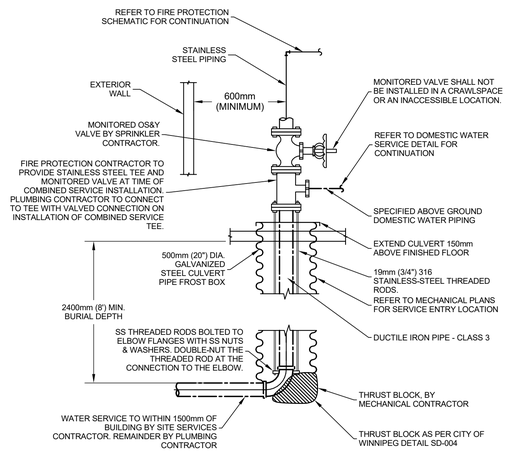

INCOMING WATER SERVICE DETAIL

SCALE: N.T.S.

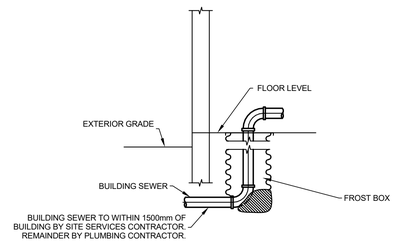

INCOMING SANITARY SERVICE DETAIL

SCALE: N.T.S

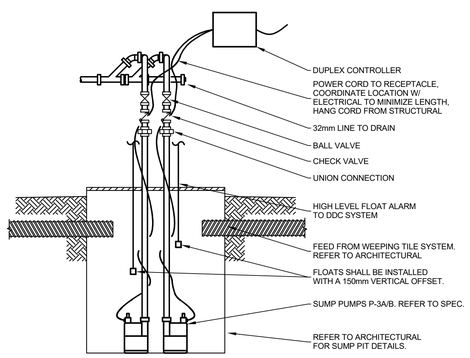

WEEPING TILE SUMP PUMP DETAIL - DUPLEX

SCALE: N.T.S

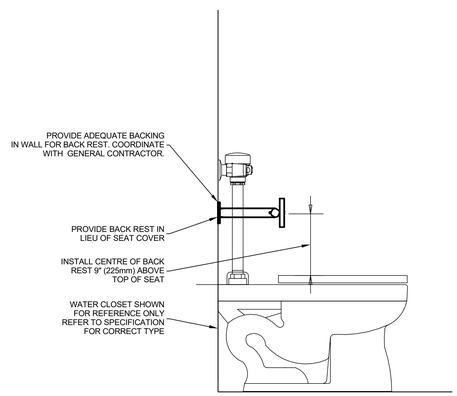

WATER CLOSET BACK REST DETAIL

SCALE: N.T.S.

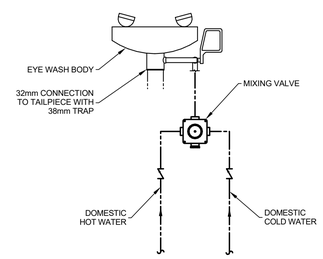

EYE WASH AND MIXING VALVE DETAIL

SCALE: N.T.S

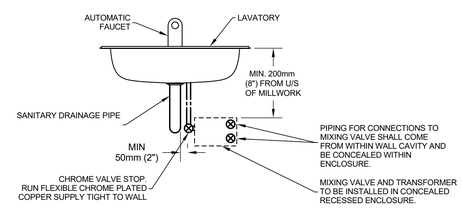

LAVATORY DETAIL

SCALE: N.T.S

Cibinel
Architecture Ltd
560 ACADEMY ROAD WINNIPEG MB R3N 0E3
T. 204 989 8910
ARCHITECT

epp siepman engineering
400 - 136 Market Avenue
Winnipeg, MB R3B 0P4
T 204 453 1080
CONSULTANT

ENGINEERS GEOSCIENTISTS MANITOBA
Certificate of Authorization
Epp Siepman Engineering Inc.
No. 4035

This is a print of a document that has been electronically authenticated with technology authorized by the Engineers Geoscientists Manitoba. The original is in electronic form.

NO.	DATE	REVISION / ISSUANCE
0	2023.02.03	ISSUED FOR CONSTRUCTION

Seal

PROVINCE OF MANITOBA
D. A. SIEPMAN
Member
23527
2023-02-03
REGISTERED PROFESSIONAL ENGINEER

Project
WFPS STATION 9
1083 AUTUMNWOOD DRIVE

Sheet Title
DETAILS - PLUMBING

Project No. 22028
Sheet MP4.1