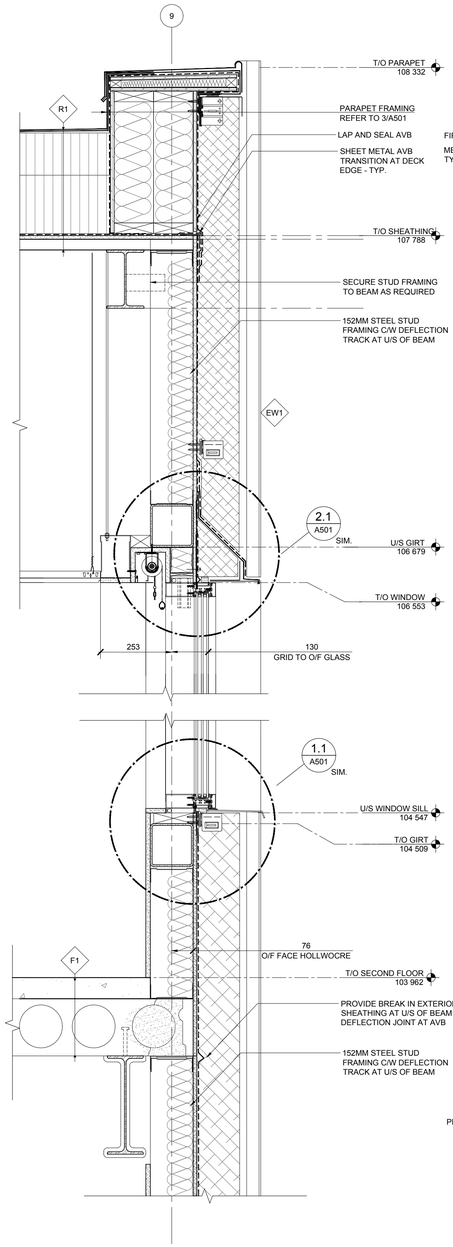

1 A507 EAST ELEVATION @ CW - TYP.
1:10

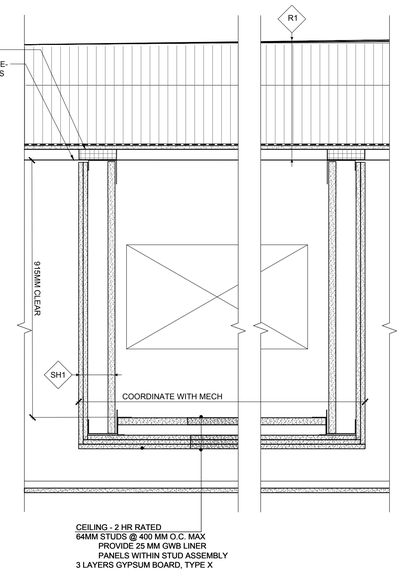

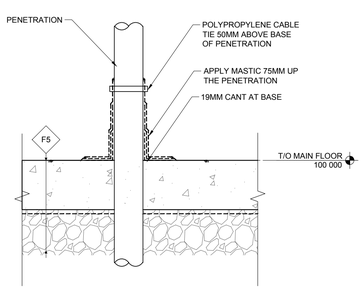

6 A510 TYP PENETRATION SECTION @ MAIN FLOOR
1:10

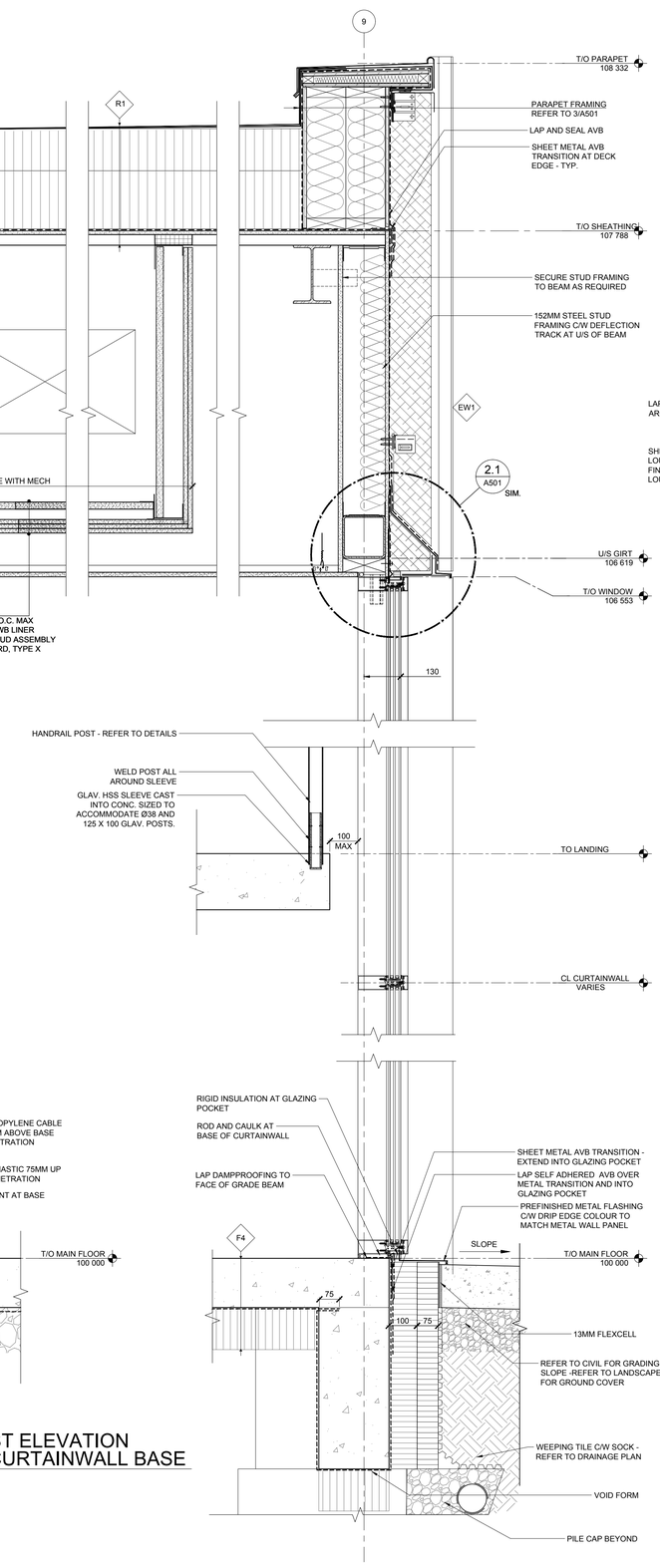

2 A507 EAST ELEVATION @ CURTAINWALL BASE
1:10

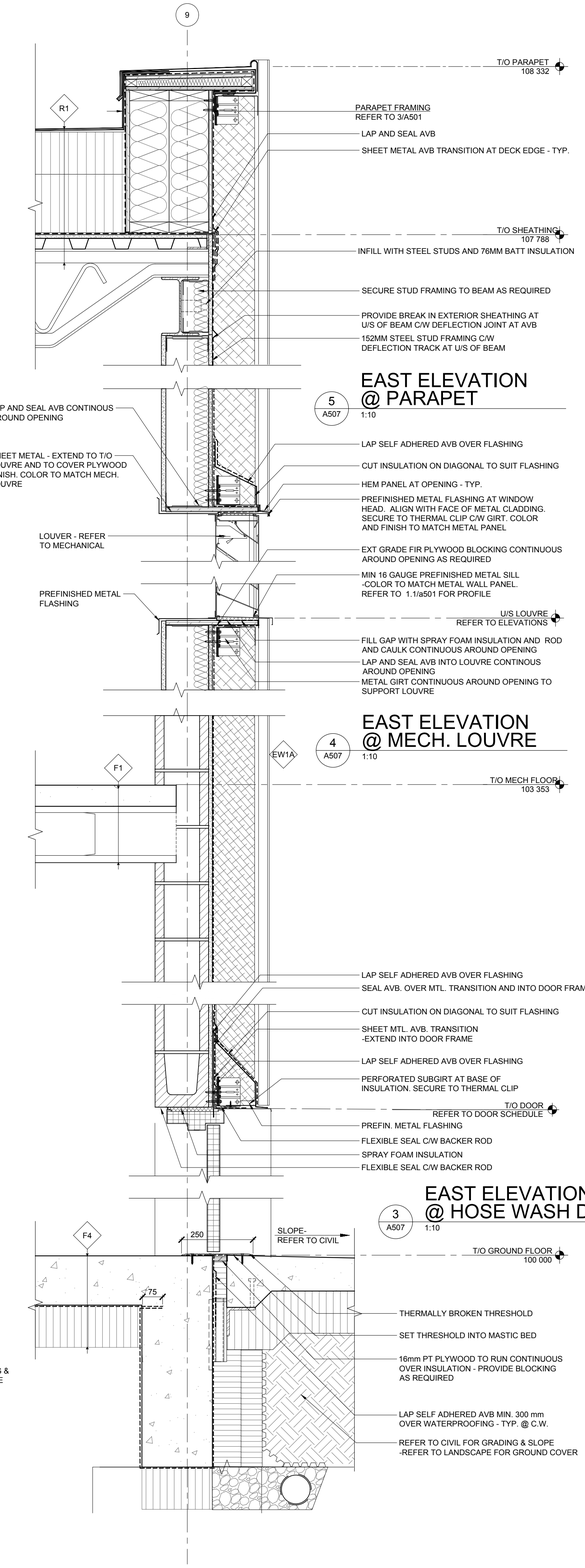

Cibinel
Architecture Ltd
560 ACADEMY ROAD WINNIPEG MB R3N 0E3
T. 204 989 8910
ARCHITECT

NO.	DATE	REVISION / ISSUANCE
00	2023.02.03	ISSUED FOR CONSTRUCTION

Seal

Project

WFPS STATION 9

1083 AUTUMNWOOD DRIVE

Sheet Title

SECTION DETAILS
PATIO

Project No.

2150

Sheet

A507