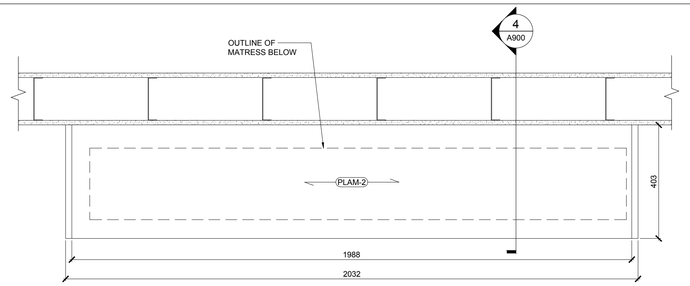

2 A900 MILLWORK PLAN
MURPHY BED
1:10

3 A900

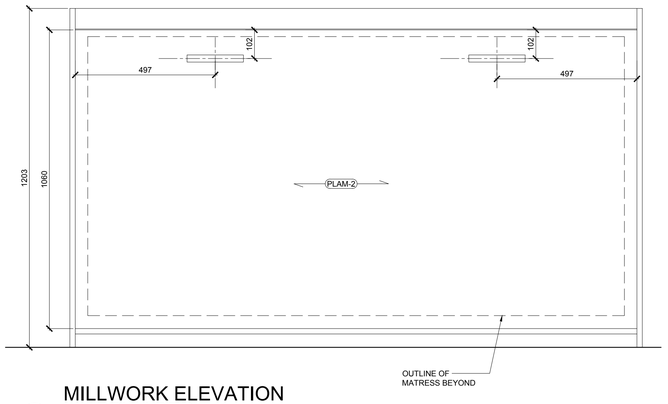

3 A900 MILLWORK ELEVATION
MURPHY BED
1:10

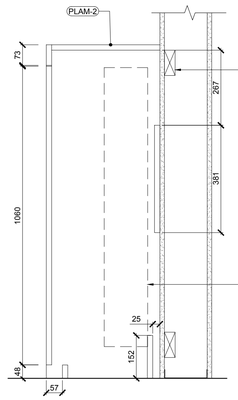

4 A900 MILLWORK SECTION
MURPHY BED
1:10

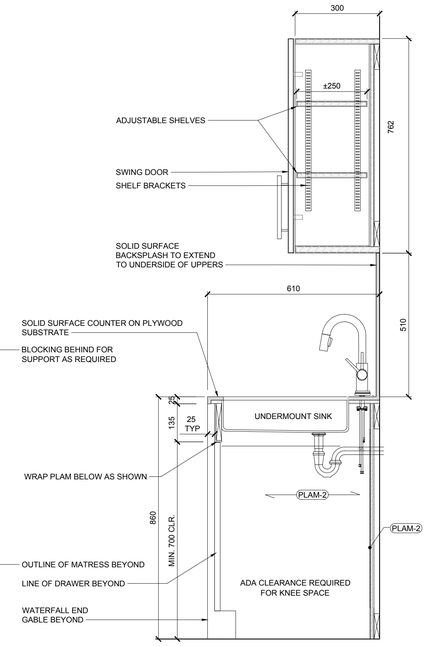

10 A900 MILLWORK SECTION
TRAINING CLASSROOM
1:10

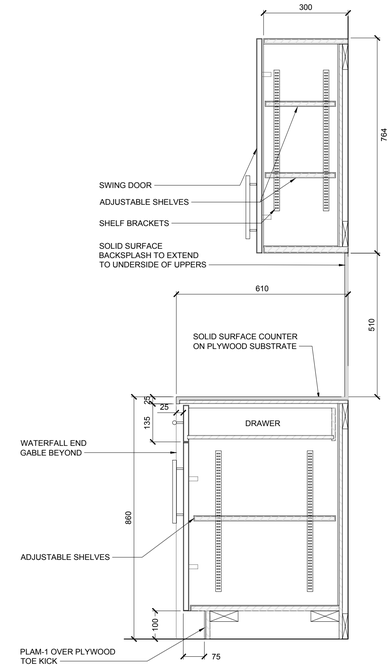

11 A900 MILLWORK SECTION
TRAINING CLASSROOM
1:10

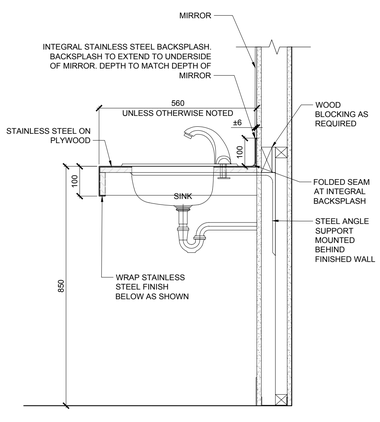

1 A900 MILLWORK SECTION SHWR 113
& W/R 120, 217, 218, & 219
1:10

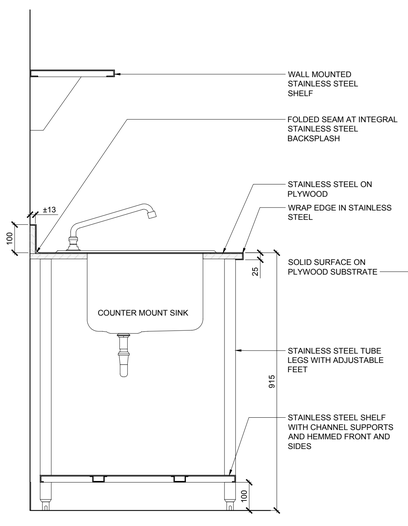

5 A900 MILLWORK SECTION
LAUNDRY 216B
1:10

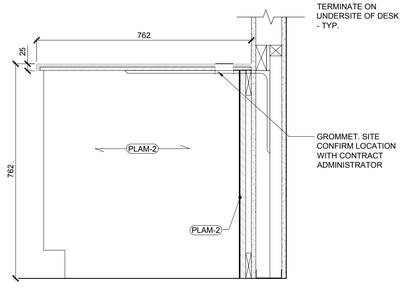

6 A900 TYP. MILLWORK SECTION
OFFICE DESK
1:10

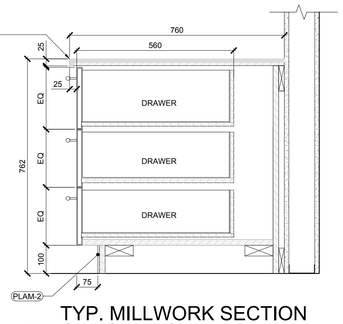

7 A900 TYP. MILLWORK SECTION
OFFICE DESK
1:10

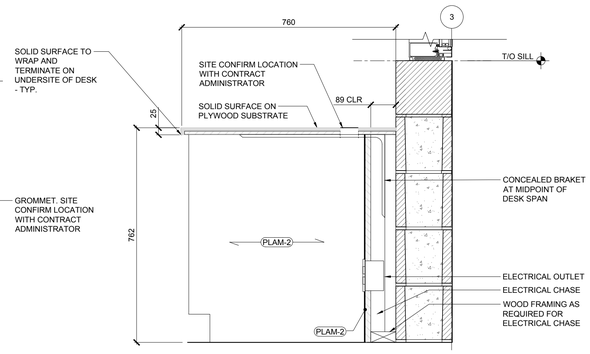

8 A900 MILLWORK SECTION
WATCH OFFICE DESK
1:10

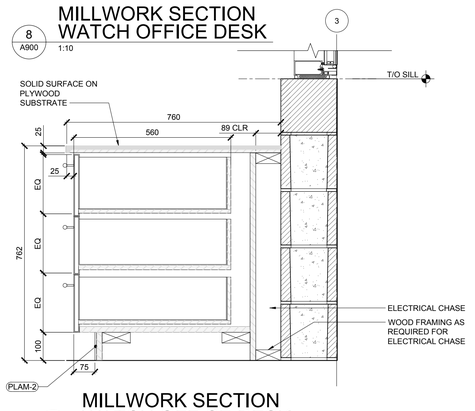

9 A900 MILLWORK SECTION
WATCH OFFICE DESK
1:10

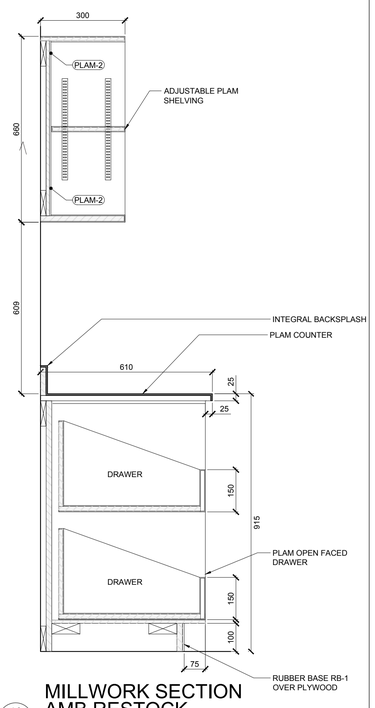

12 A900 MILLWORK SECTION
AMB RESTOCK
1:10

Cibinel
Architecture Ltd
560 ACADEMY ROAD WINNIPEG MB R3N 0E3
T. 204 989 8910

ARCHITECT

NO.	DATE	REVISION / ISSUANCE
00	2023.02.03	ISSUED FOR CONSTRUCTION

Seal

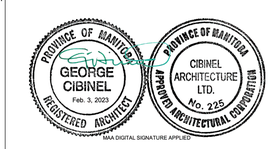

Project
WFPS STATION 9

1083 AUTUMNWOOD DRIVE

Sheet Title
MILLWORK

Project No.
2150

Sheet
A900

CIBINEL - Arch D - 24" X 36"