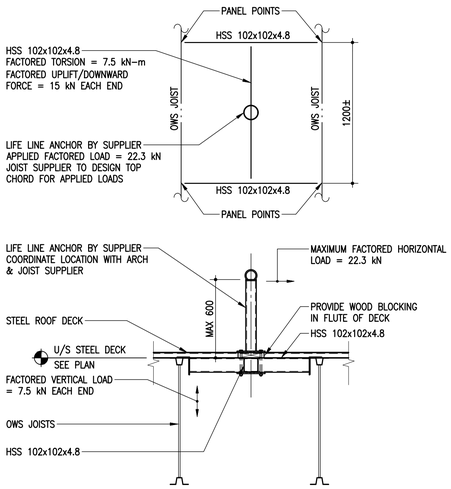

A — LIFELINE ANCHOR DETAIL BETWEEN JOISTS

S003 1:20

NOTE: COORDINATE ROOF PANEL LAYOUT WITH JOIST SPACING FOR LIFE LINE ANCHOR LOCATIONS

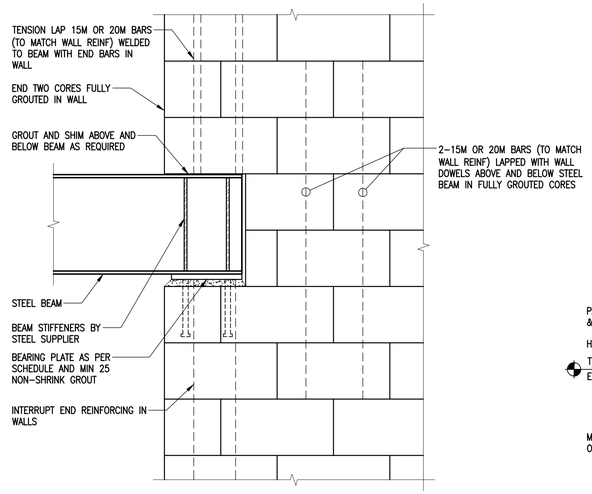

B — TYPICAL BEARING PLATE CONNECTION AT MASONRY WALL

S003 1:10

- SIMILAR DETAIL WHERE STEEL BEAM SPANS IN PERPENDICULAR DIRECTION (INTO THE PAGE).

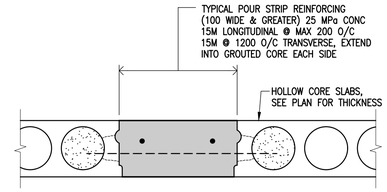

C — TYPICAL HOLLOW CORE POUR STRIP DETAIL

S003 1:10

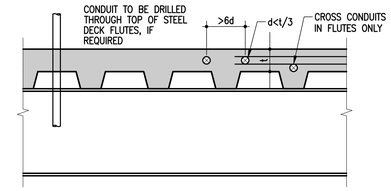

D — GUIDELINES FOR SLAB ON STEEL DECK EMBEDDED CONDUIT

S003 1:10

NOTES:

- DO NOT BUNDLE CONDUITS IN CONCRETE SLAB ON STEEL DECK.

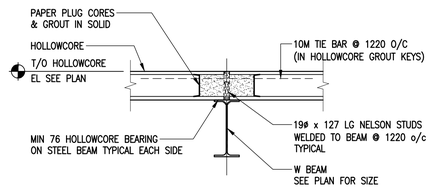

G — TYPICAL HOLLOWCORE DETAIL

S003 1:20

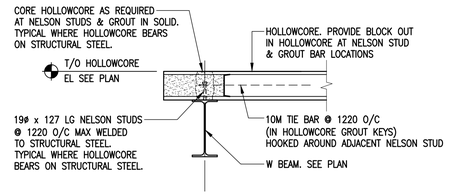

H — TYPICAL HOLLOWCORE DETAIL

S003 1:20

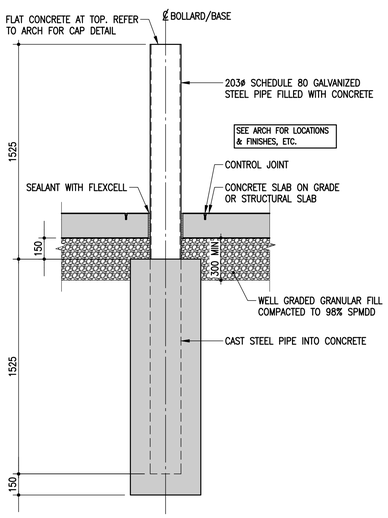

E — TYPICAL BOLLARD DETAIL AT APPARATUS BAY

S003 1:20

- REFER TO ARCHITECTURAL AND LANDSCAPE FOR LOCATIONS.

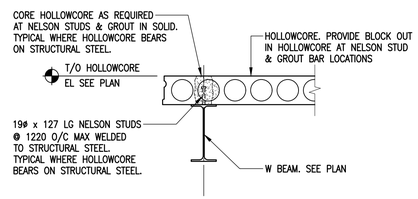

F — TYPICAL HOLLOWCORE DETAIL

S003 1:20

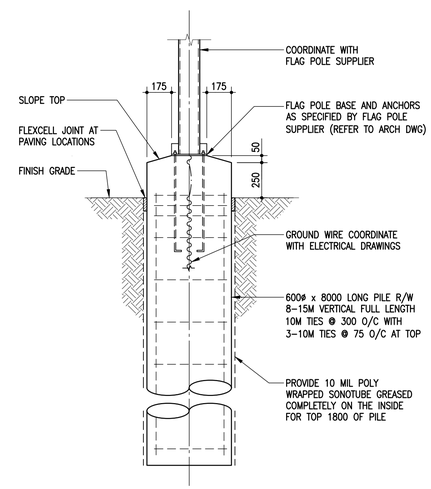

J — TYPICAL FLAG POLE PILE

S003 1:20 REFER TO ARCH DWGS FOR LOCATION

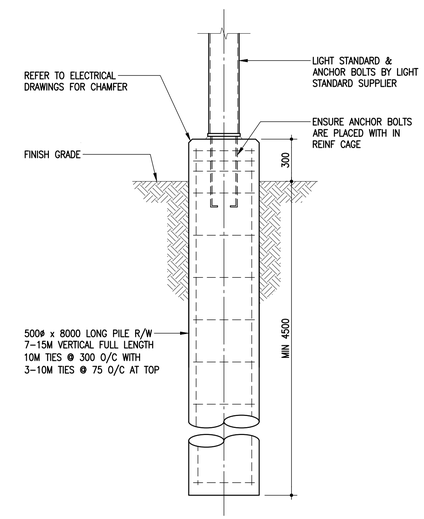

K — TYPICAL LIGHT STANDARD PILE

S003 1:20 REFER TO ARCH DWGS FOR LOCATION

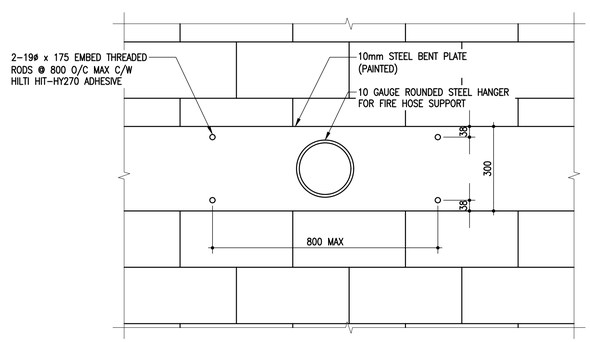

L — HOSE WASH PEG ELEVATION

S003 1:10

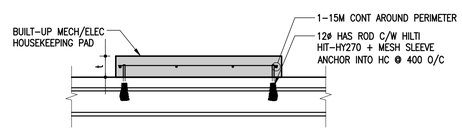

M — HOUSEKEEPING PAD DETAIL

S003 1:20

- COORDINATE ANCHOR LOCATIONS WITH HC SUPPLIER AS TO NOT DISTURB STRANDS, SCAN FOR STRANDS PRIOR TO PLACING ANCHORS.

PAD THICKNESS "t"	REINFORCEMENT
100mm	10M @ 400 O/C EACH WAY
SEE MECHANICAL/ELECTRICAL DRAWINGS FOR HOUSEKEEPING PAD SIZES AND LOCATIONS	

ENGINEERS GEOSCIENTISTS MANITOBA
Certificate of Authorization
Crosier Kilgour & Partners Ltd.
No. 235

Cibinel Architecture Ltd
560 ACADEMY ROAD WINNIPEG MB R3N 0E3
T. 204 989 8910

ARCHITECT

300-275 Carlton Street
Winnipeg, Manitoba R3C 5R6
T 204. 943. 7501
F 204. 943. 7507

2022-0020

Crosier Kilgour & Partners Ltd.
CONSULTING STRUCTURAL ENGINEERS

NO.	DATE	REVISION / ISSUANCE
00	2023.02.03	ISSUED FOR CONSTRUCTION

Seal

Project

WFPS STATION 9

1083 AUTUMNWOOD DRIVE

Sheet Title

TYPICAL DETAILS

Project No. 2150

Sheet S003