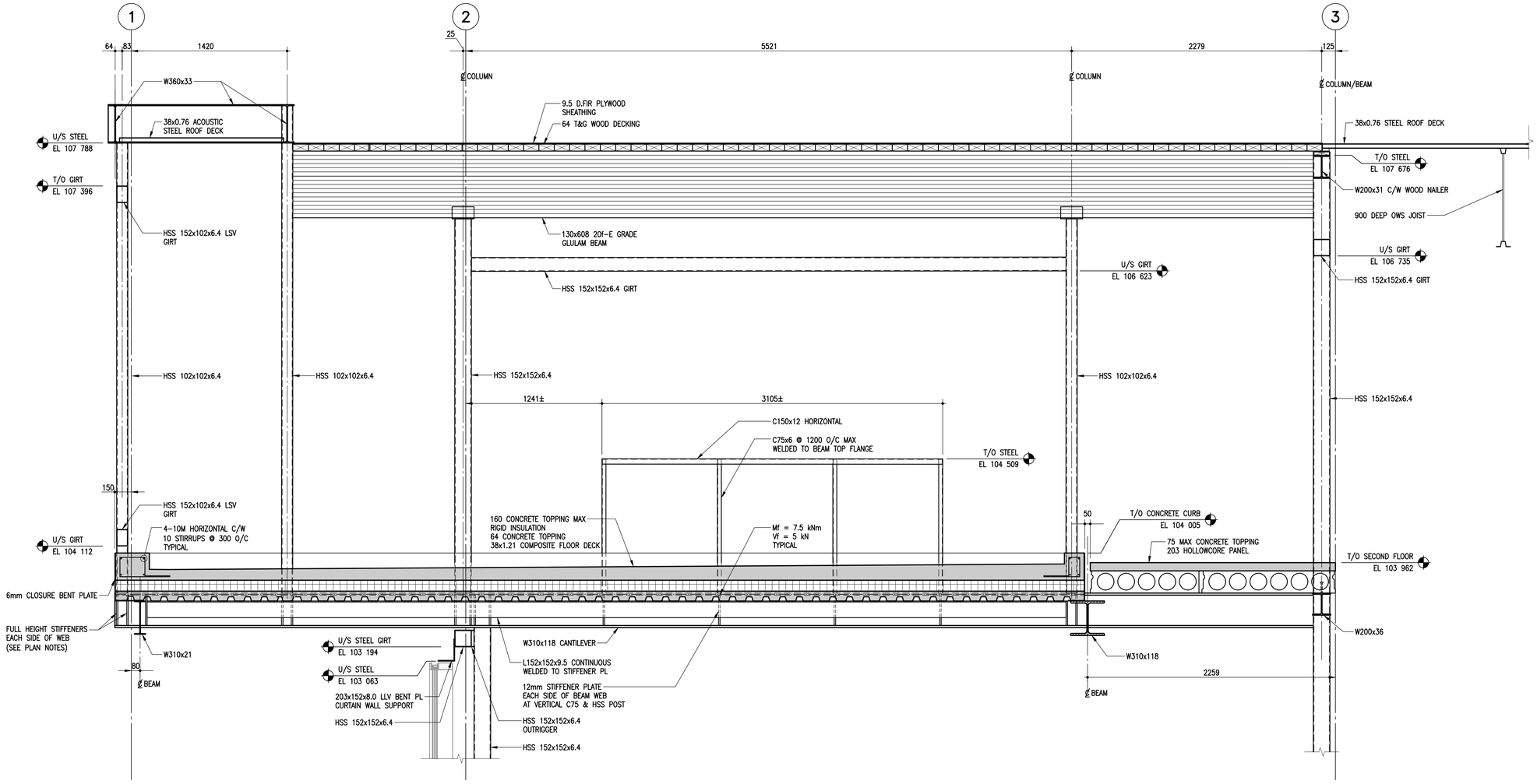

1 SECTION
S103 S405 1:20

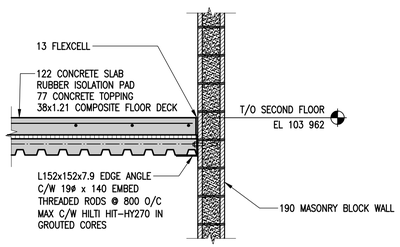

2 SECTION
S103 S405 1:20

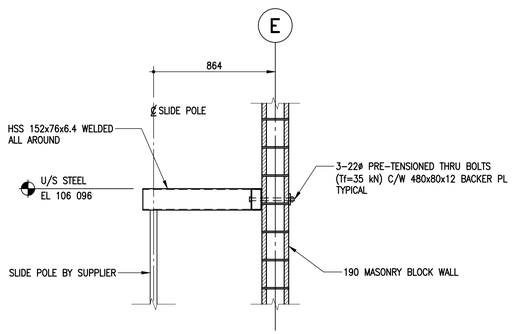

3 SECTION
S103 S405 1:20

ENGINEERS GEOSCIENTISTS MANITOBA
Certificate of Authorization
Crosier Kilgour & Partners Ltd.
No. 235

Cibinel Architecture Ltd
560 ACADEMY ROAD WINNIPEG MB R3N 0E3
T. 204 989 8910

ARCHITECT

300-275 Carlton Street
Winnipeg, Manitoba R3C 5R6
T 204. 943. 7501
F 204. 943. 7507

2022-0020

Crosier Kilgour & Partners Ltd.
CONSULTING STRUCTURAL ENGINEERS

NO.	DATE	REVISION / ISSUANCE
00	2023.02.03	ISSUED FOR CONSTRUCTION

Seal

Project
WFPS STATION 9
1083 AUTUMNWOOD DRIVE

Sheet Title
SECTIONS

Project No. 2150

Sheet S405

CIBINEL - Arch D - 24" X 36"