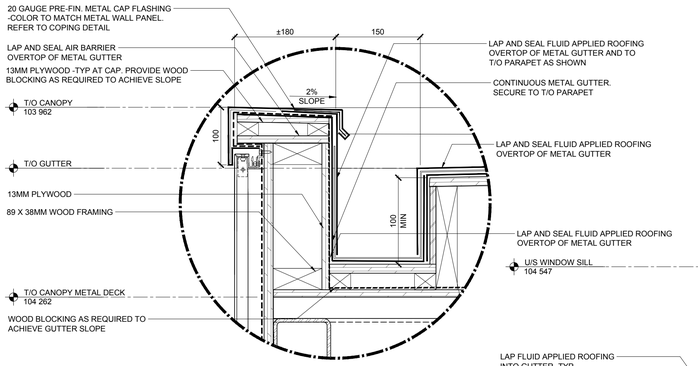

CANOPY SECTION PARAPET AND GUTTER DETAIL

2.3 A502 1:5

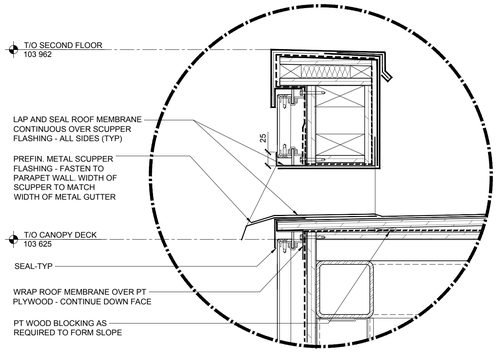

CANOPY SECTION @ SCUPPER - TYP

2.2 A502 1:5

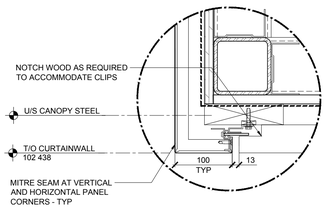

CORNER DETAIL @ CANOPY SOFFIT

2.1 A502 1:5

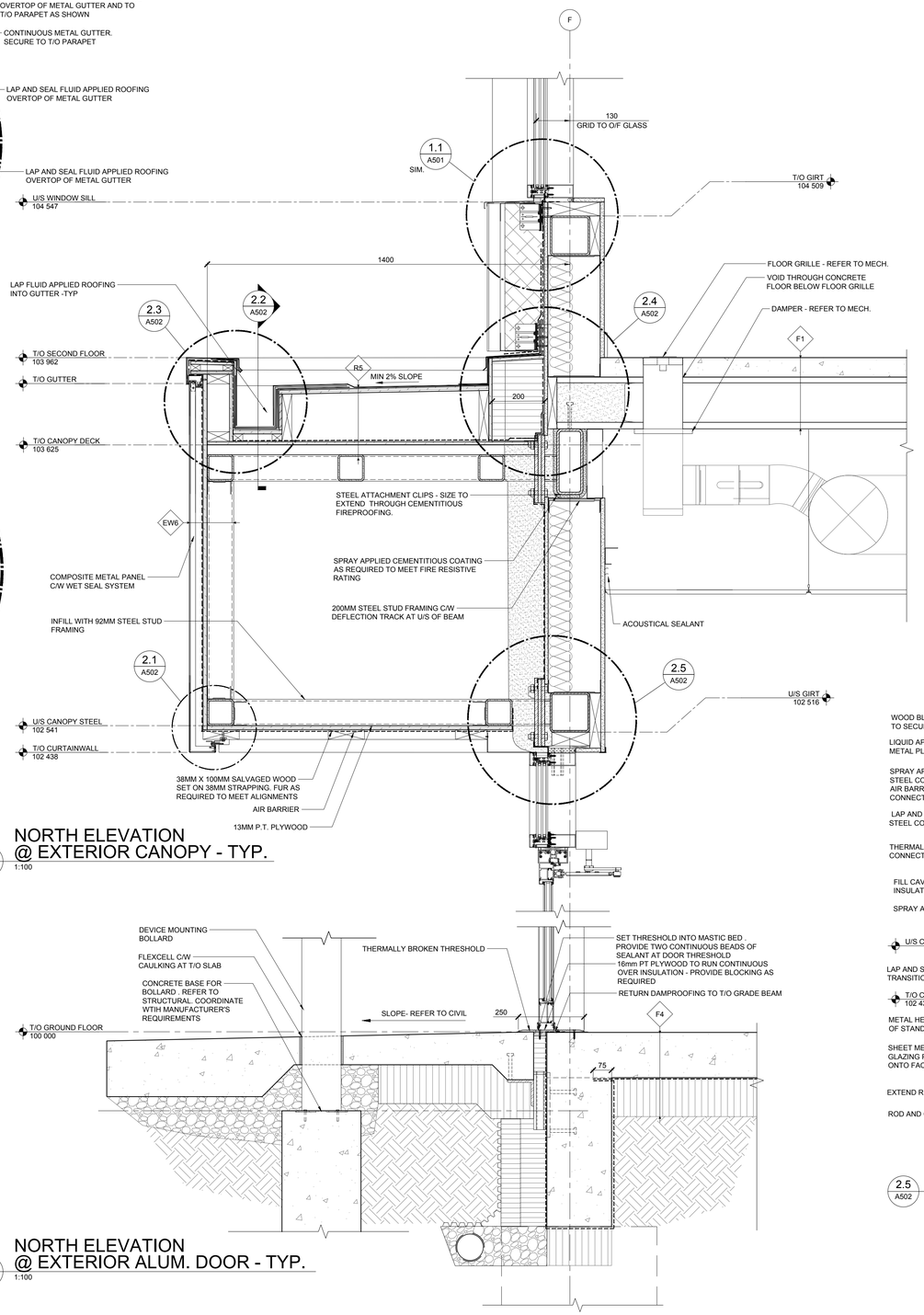

NORTH ELEVATION @ EXTERIOR CANOPY - TYP.

2 A502 1:100

NORTH ELEVATION @ EXTERIOR ALUM. DOOR - TYP.

1 A502 1:100

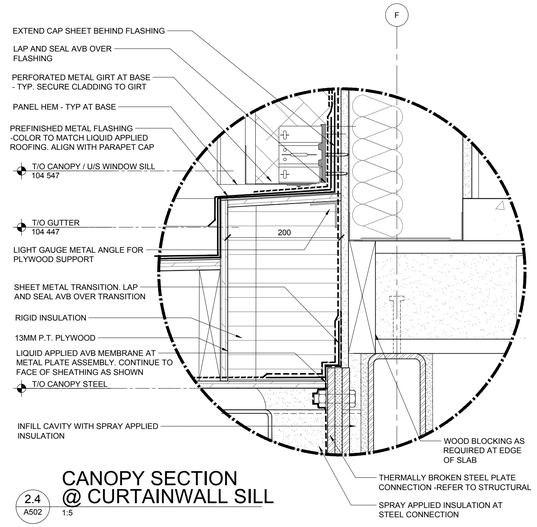

CANOPY SECTION @ CURTAINWALL SILL

2.4 A502 1:5

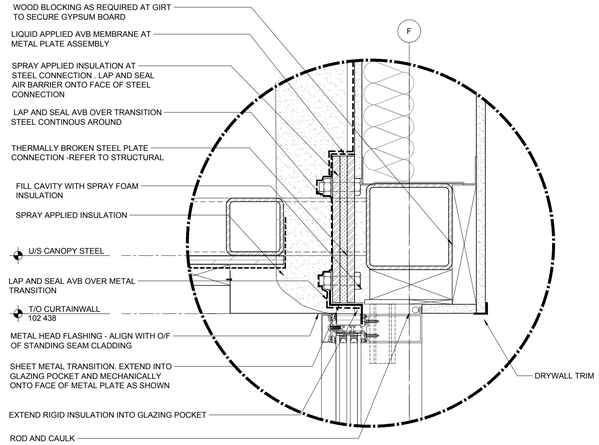

CANOPY SECTION @ CURTAINWALL

2.5 A502 1:5

Cibinel Architecture Ltd

560 ACADEMY ROAD WINNIPEG MB R3N 0E3
T. 204 989 8910

ARCHITECT

NO.	DATE	REVISION / ISSUANCE
00	2023.02.03	ISSUED FOR CONSTRUCTION

Seal

Project

WFPS STATION 9

1083 AUTUMNWOOD DRIVE

Sheet Title

SECTION DETAILS
NORTH WALL

Project No.

2150

Sheet

A502