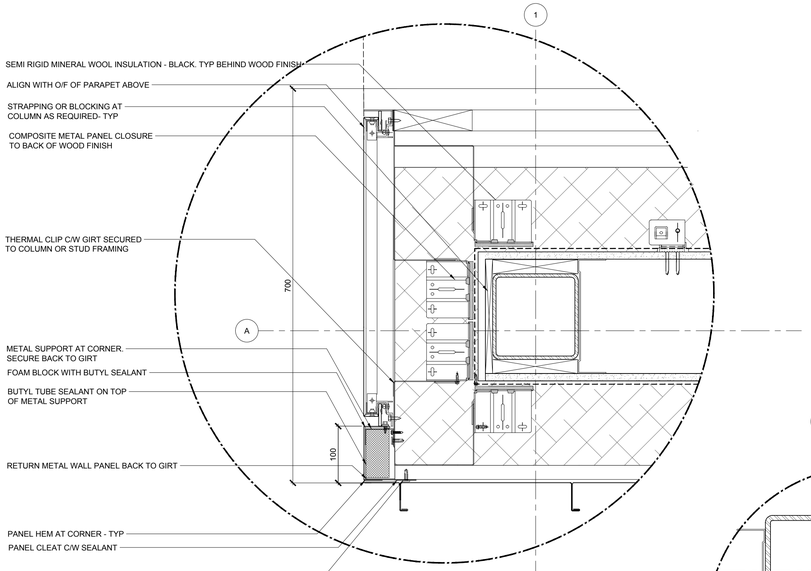

1.1 A806 PLAN DETAIL @ SOUTH WEST CORNER 1:5

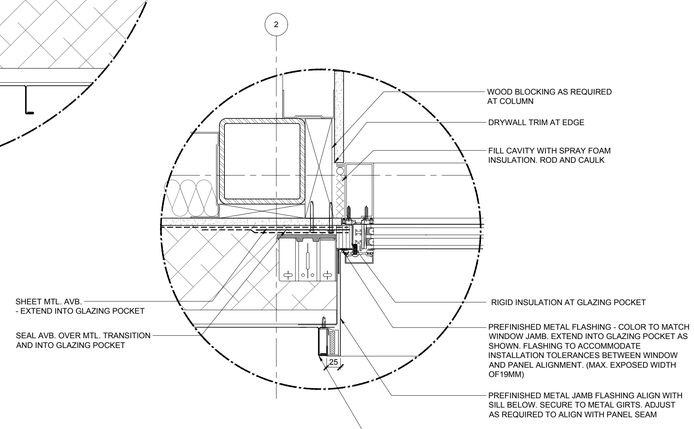

3.1 A806 PLAN DETAIL @ SOUTH WEST CORNER 1:10

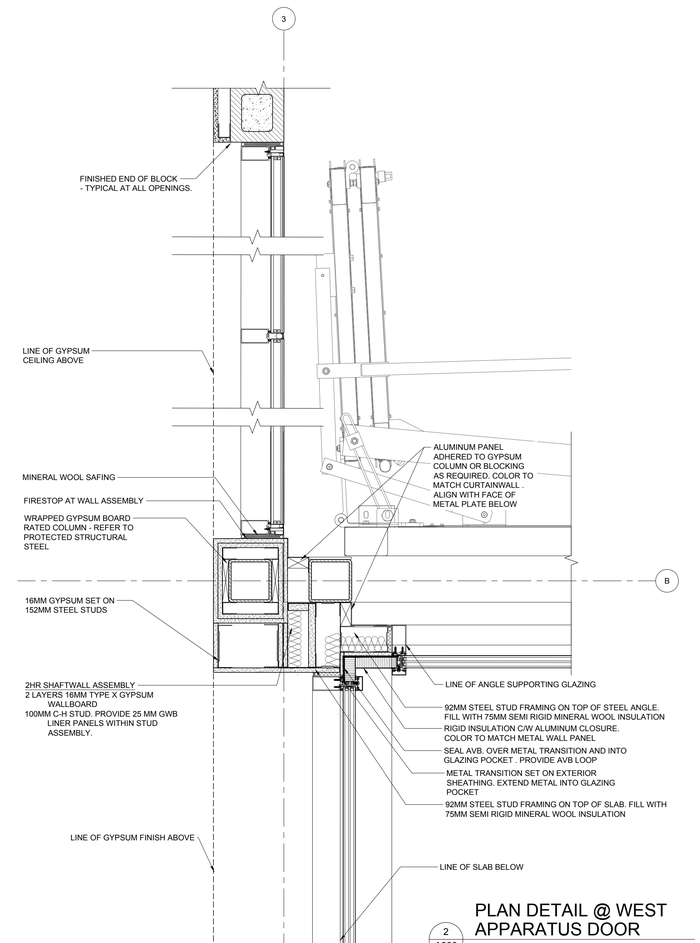

2 A806 PLAN DETAIL @ WEST APPARATUS DOOR 1:10

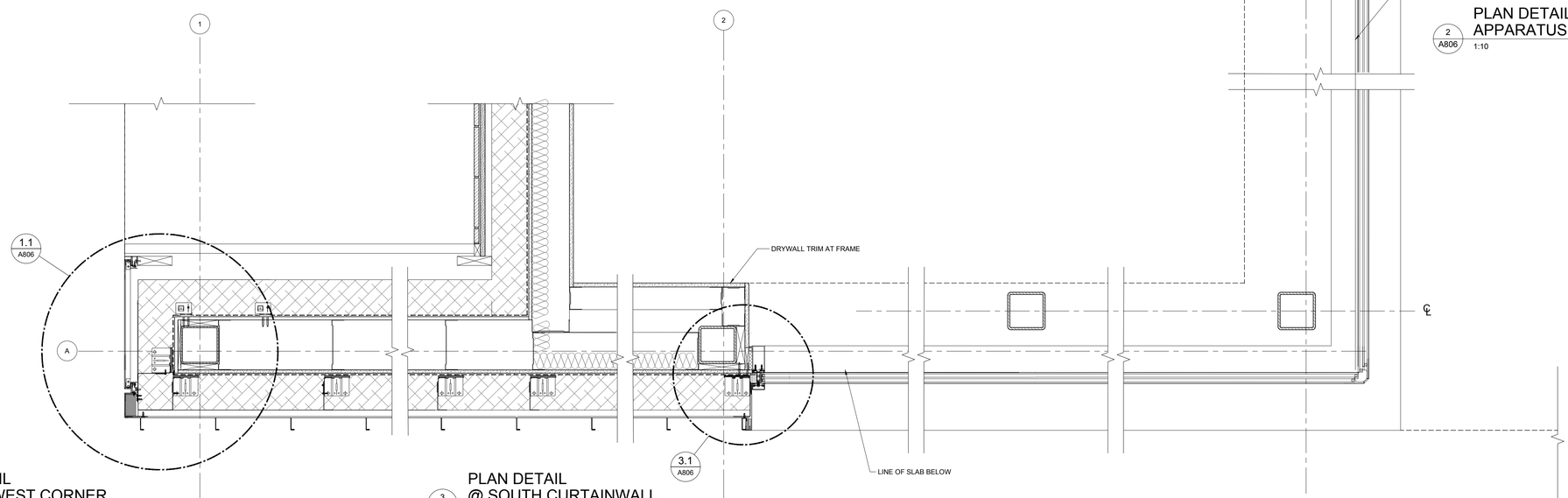

1 A806 PLAN DETAIL @ SOUTH WEST CORNER 1:10

3 A806 PLAN DETAIL @ SOUTH CURTAINWALL 1:10

Cibinel Architecture Ltd
560 ACADEMY ROAD WINNIPEG MB R3N 0E3
T. 204 989 8910

ARCHITECT

NO.	DATE	REVISION / ISSUANCE
00	2023.02.03	ISSUED FOR CONSTRUCTION

Seal

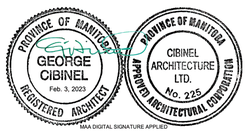

Project

WFPS STATION 9

1083 AUTUMNWOOD DRIVE

Sheet Title

PLAN DETAILS

Project No. 2150

Sheet A806

CIBINEL - Arch D - 24" X 36"