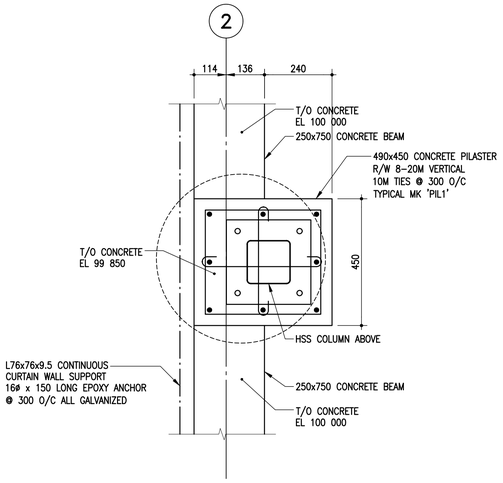

A PILASTER DETAIL – PIL1
S102 S201 1:10

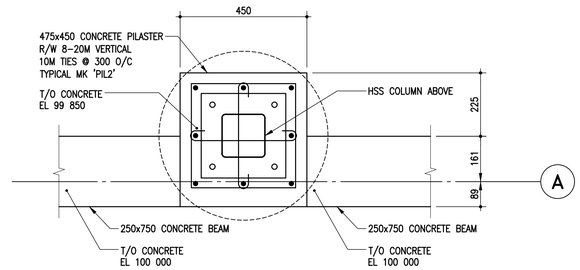

B PILASTER DETAIL – PIL2
S102 S201 1:10

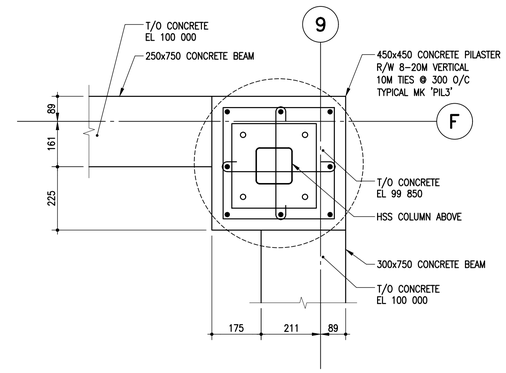

C PILASTER DETAIL – PIL3
S102 S201 1:10

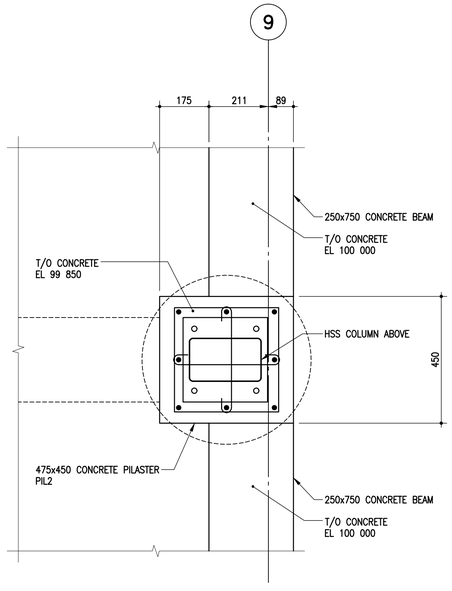

D PILASTER DETAIL
S102 S201 1:10

ENGINEERS
GEOSCIENTISTS
MANITOBA
Certificate of Authorization
Crosier Kilgour & Partners Ltd.
No. 235

Cibinel
Architecture Ltd
560 ACADEMY ROAD WINNIPEG MB R3N 0E3
T. 204 989 8910

ARCHITECT

300-275 Carlton Street
Winnipeg, Manitoba R3C 5R6
T 204. 943. 7501
F 204. 943. 7507

2022-0020

Crosier Kilgour
& Partners Ltd.
CONSULTING STRUCTURAL ENGINEERS

NO.	DATE	REVISION / ISSUANCE
00	2023.02.03	ISSUED FOR CONSTRUCTION

Seal

Project
WFPS STATION 9

1083 AUTUMNWOOD DRIVE

Sheet Title
PILASTER DETAILS

Project No.
2150

Sheet
S201

CIBINEL - Arch D - 24" X 36"