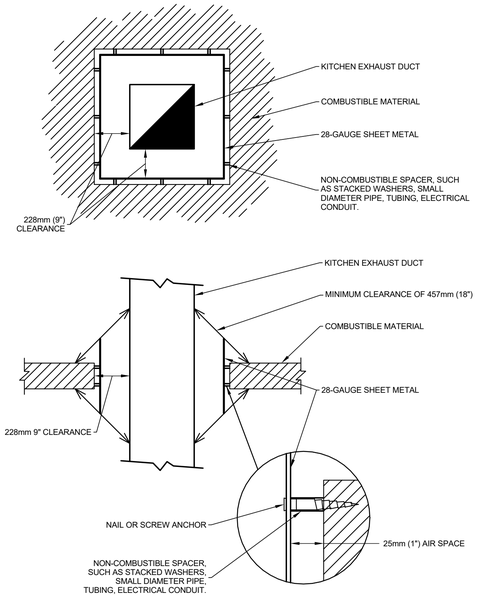

KITCHEN EXHAUST HOOD CLEARANCES DETAIL

SCALE: N.T.S.

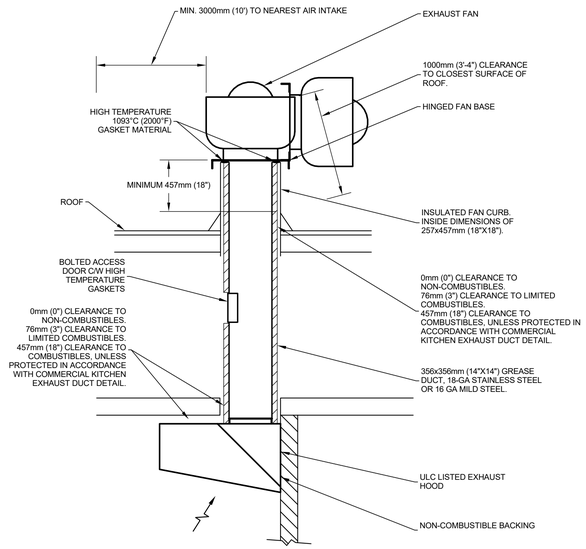

COMMERCIAL KITCHEN EXHAUST DETAIL

SCALE: N.T.S.

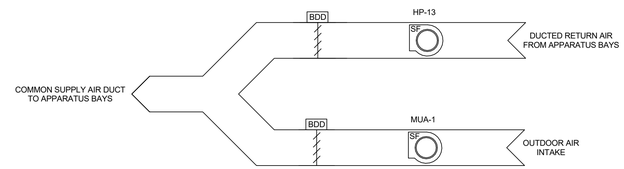

NOTES:

- REFER TO APPARATUS BAYS VENTILATION CONTROL STRATEGIES AND CONTROL SCHEMATICS.
- HP-13 TO DISABLE WHENEVER MUA-1 IS ENABLED.

APPARATUS BAY VENTILATION SCHEMATIC

SCALE: N.T.S.

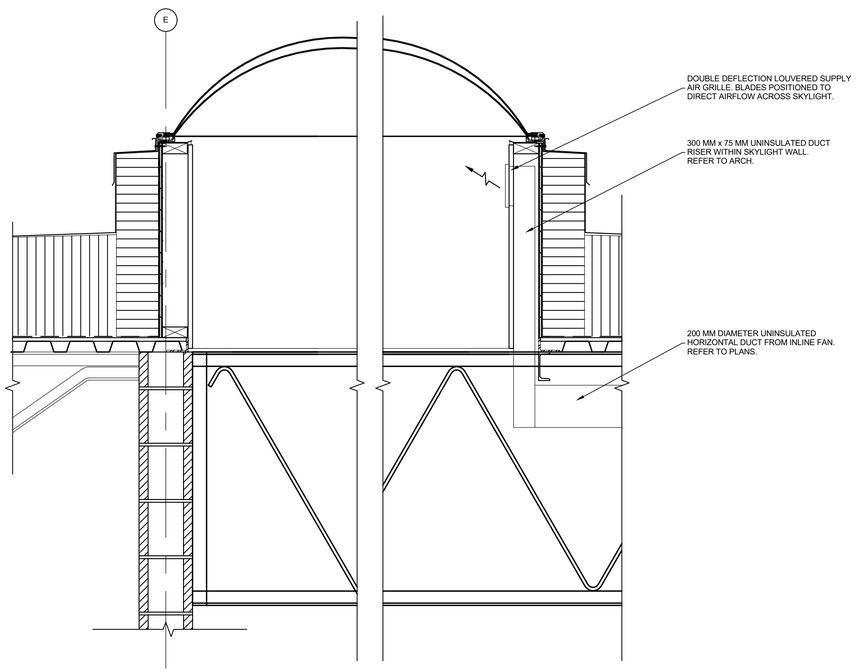

SKYLIGHT VENTILATION DETAIL

SCALE: N.T.S.

Cibinel Architecture Ltd

560 ACADEMY ROAD WINNIPEG MB R3N 0E3
T. 204 989 8910

ARCHITECT

epp siepman engineering

400 - 136 Market Avenue
Winnipeg, MB R3B 0P4
T 204 453 1080

CONSULTANT

ENGINEERS GEOSCIENTISTS MANITOBA
Certificate of Authorization

Epp Siepman Engineering Inc.

No. 4035

This is a print of a document that has been electronically authenticated with technology authorized by the Engineers Geoscientists Manitoba. The original is in electronic form.

NO.	DATE	REVISION / ISSUANCE
0	2023.02.03	ISSUED FOR CONSTRUCTION

Seal

Project

WFPS STATION 9

1083 AUTUMNWOOD DRIVE

Sheet Title

DETAILS - HVAC

Project No. 22028

Sheet MH4.2

CIBINEL - Arch D - 24" X 36"