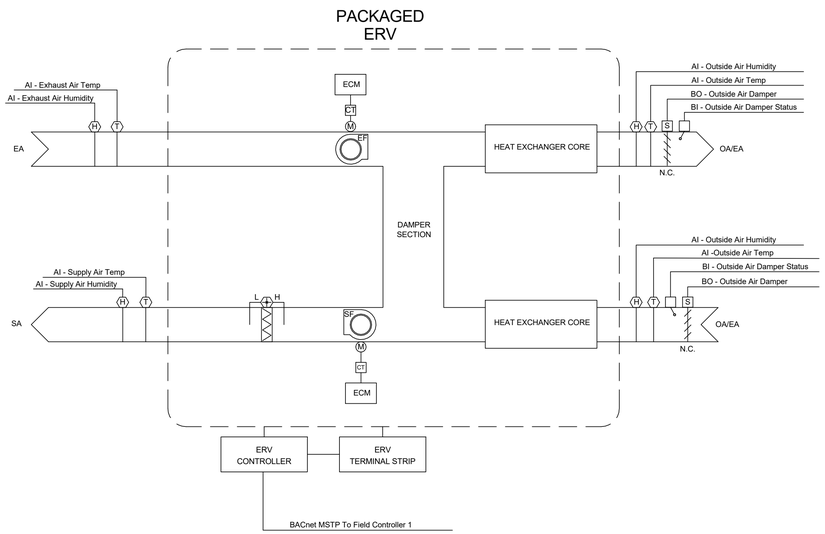

ERV SCHEMATIC, TYPICAL

SCALE: N.T.S.

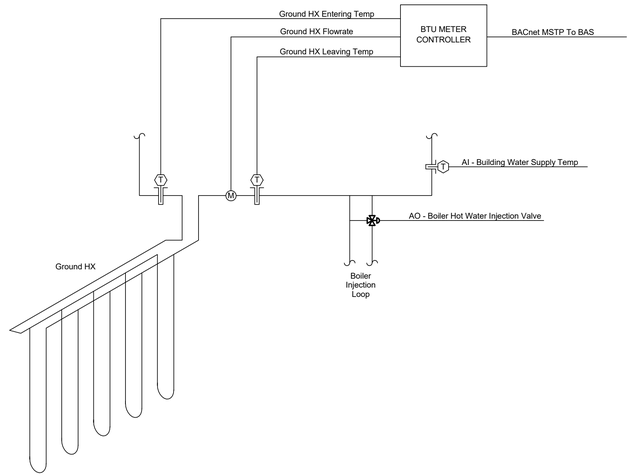

GEOTHERMAL GROUND HEAT EXCHANGER SCHEMATIC

SCALE: N.T.S.

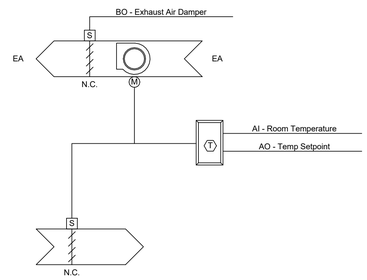

TYPICAL COOLING EXHAUST FAN CONTROL SCHEMATIC

SCALE: N.T.S.

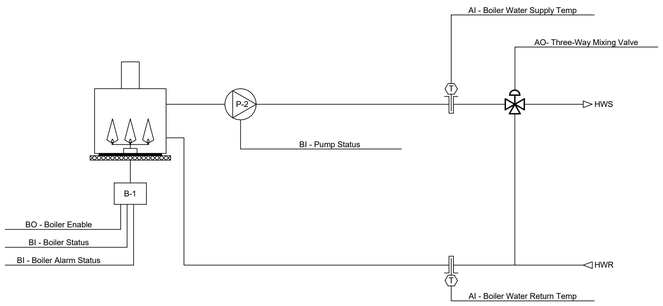

BOILER CONTROL SCHEMATIC

SCALE: N.T.S.

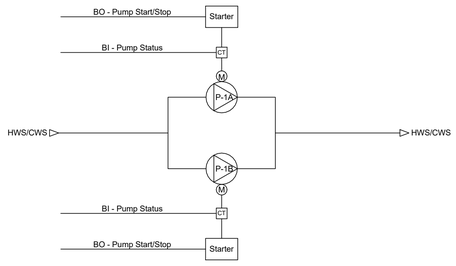

P-1A AND P-1B PUMP CONTROL SCHEMATIC

SCALE: N.T.S.

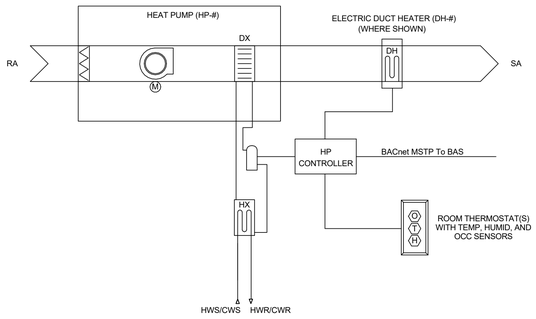

WATER-TO-AIR HEAT PUMP HP-# CONTROL SCHEMATIC, TYPICAL

SCALE: N.T.S.

Cibinel
Architecture Ltd

560 ACADEMY ROAD WINNIPEG MB R3N 0E3
T. 204 989 8910

ARCHITECT

epp siepman
engineering

400 - 136 Market Avenue
Winnipeg, MB R3B 0P4
T 204 453 1080

CONSULTANT

ENGINEERS
GEOSCIENTISTS
MANITOBA
Certificate of Authorization

Epp Siepman Engineering Inc.

No. 4035

This is a print of a document that has been electronically authenticated with technology authorized by the Engineers Geoscientists Manitoba. The original is in electronic form.

NO.	DATE	REVISION / ISSUANCE
0	2023.02.03	ISSUED FOR CONSTRUCTION

Seal

Project

WFPS STATION 9

1083 AUTUMNWOOD DRIVE

Sheet Title

MECHANICAL SCHEMATICS
- CONTROLS

Project No. 22028

Sheet M5.2

CIBINEL - Arch D - 24" X 36"