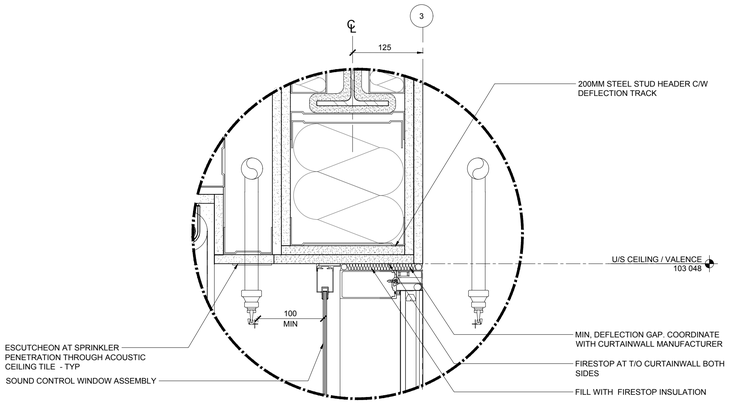

4.1 A509 SPRINKLERED GLAZING DETAIL AT CURTAINWALL - TYP
1:5

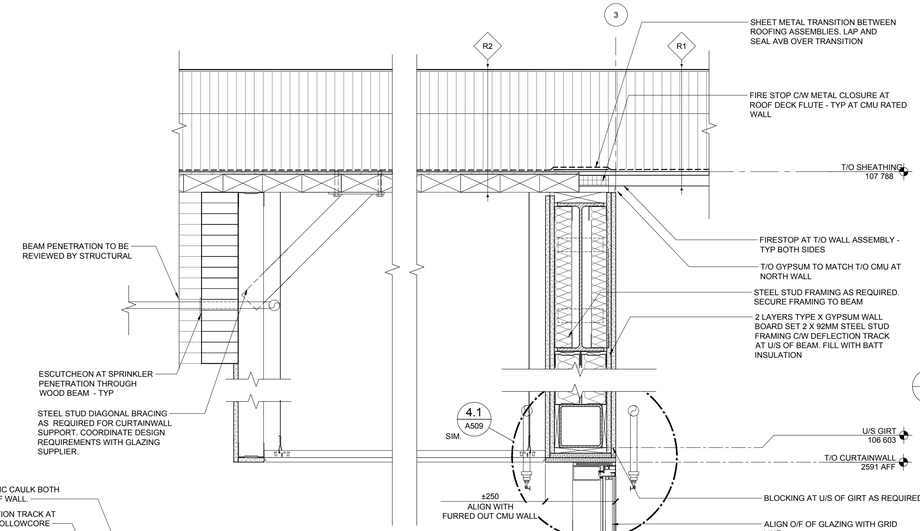

4 A509 SECOND FLOOR @ SPRINKLERED GLASS
1:100

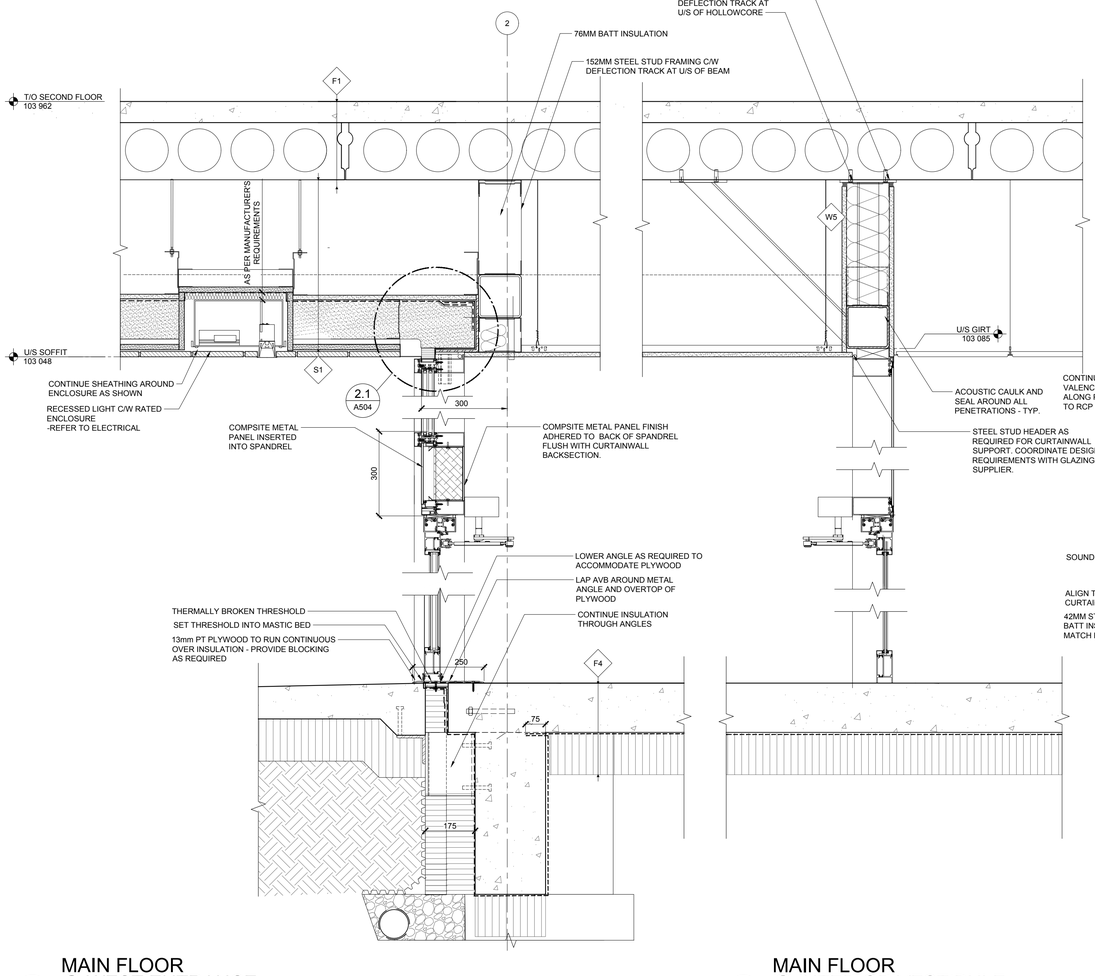

1 A509 MAIN FLOOR @ WEST ENTRANCE
1:10

2 A509 MAIN FLOOR @ INTERIOR VESTIBULE
1:100

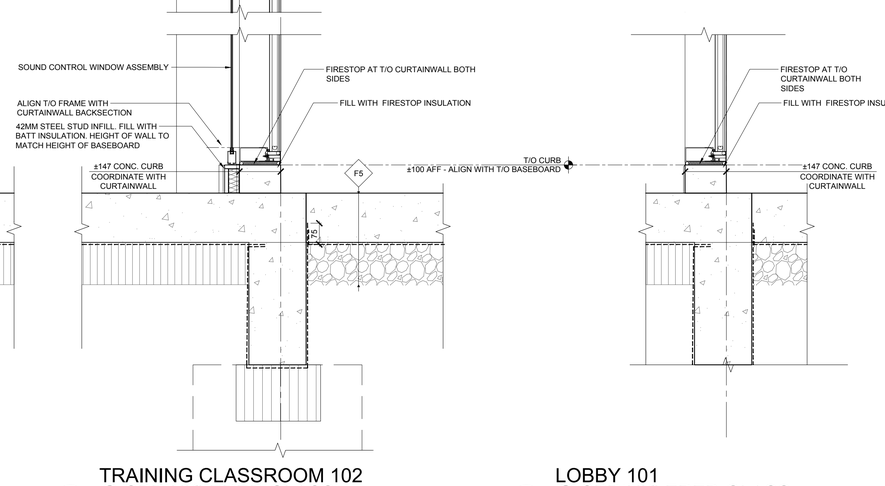

3 A509 TRAINING CLASSROOM 102 @ SPRINKLERED GLASS
1:100

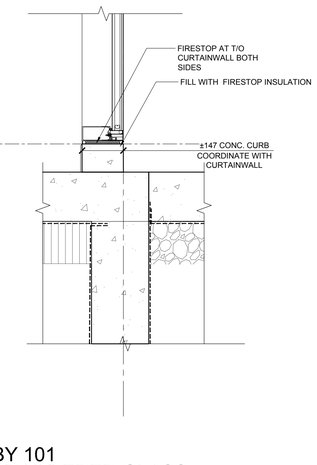

4 A509 LOBBY 101 @ SPRINKLERED GLASS
1:100

Cibinel Architecture Ltd
560 ACADEMY ROAD WINNIPEG MB R3N 0E3
T. 204 989 8910

ARCHITECT

NO.	DATE	REVISION / ISSUANCE
00	2023.02.03	ISSUED FOR CONSTRUCTION

Seal

Project
WFPS STATION 9
1083 AUTUMNWOOD DRIVE

Sheet Title
SECTION DETAILS INTERIOR

Project No. 2150

Sheet A509

CIBINEL - Arch D - 24" X 36"