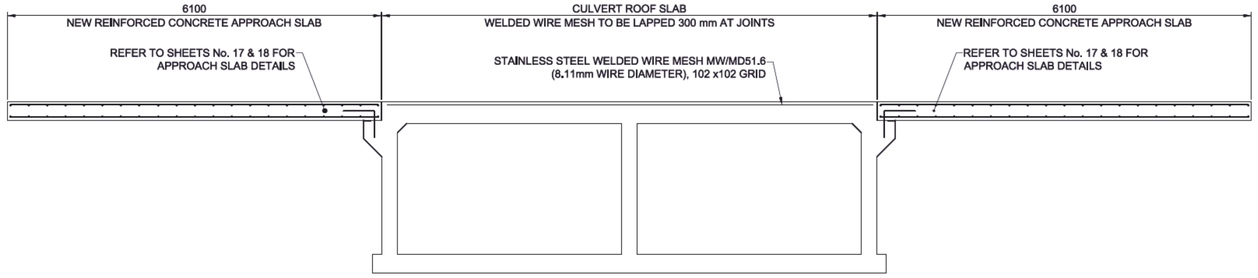

TYPICAL SECTION

A

CULVERT SECTION
SCALE: 1:50

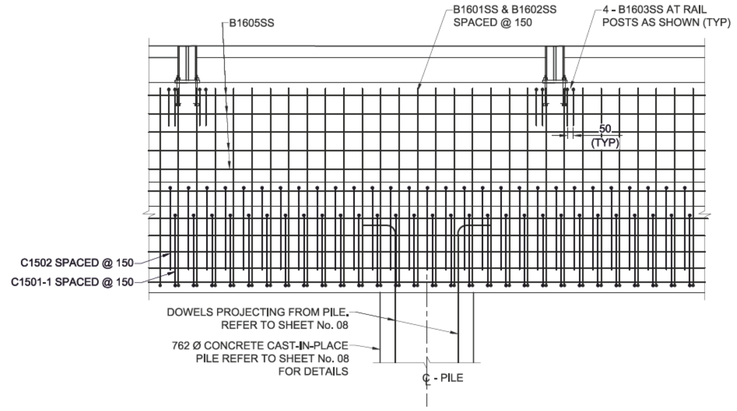

TYPICAL BARRIER AND PILE CAP BEAM ELEVATION

SCALE 1:25

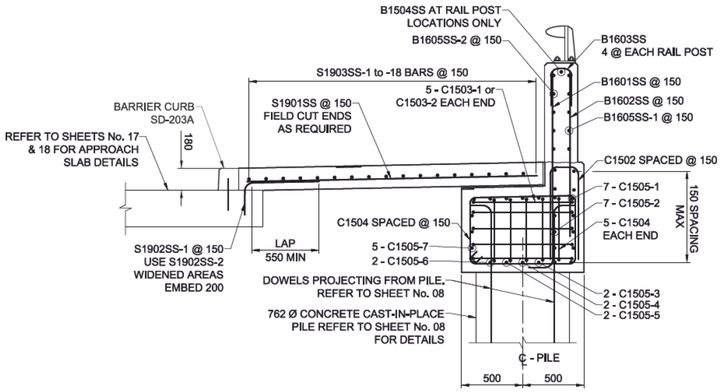

TYPICAL REINFORCING

SE PILE CAP, SIDEWALK & BARRIER
SCALE 1:25

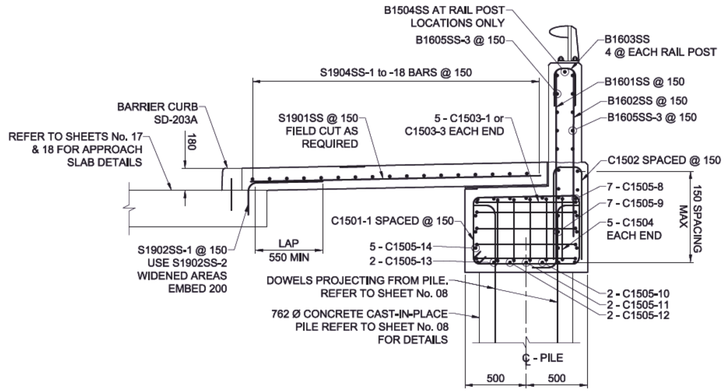

TYPICAL REINFORCING

NE PILE CAP, SIDEWALK & BARRIER
SCALE 1:25

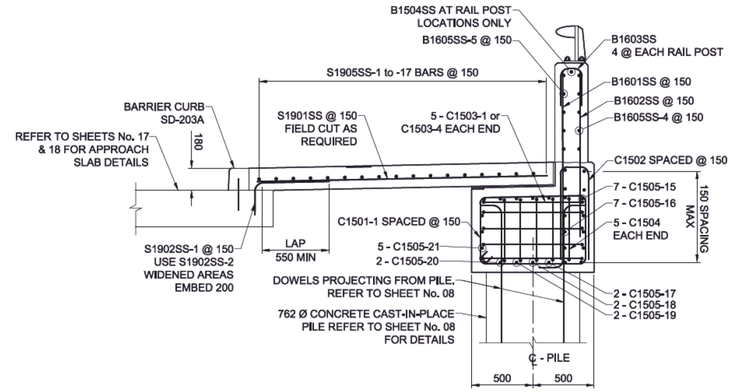

TYPICAL REINFORCING

SW PILE CAP, SIDEWALK & BARRIER
SCALE 1:25

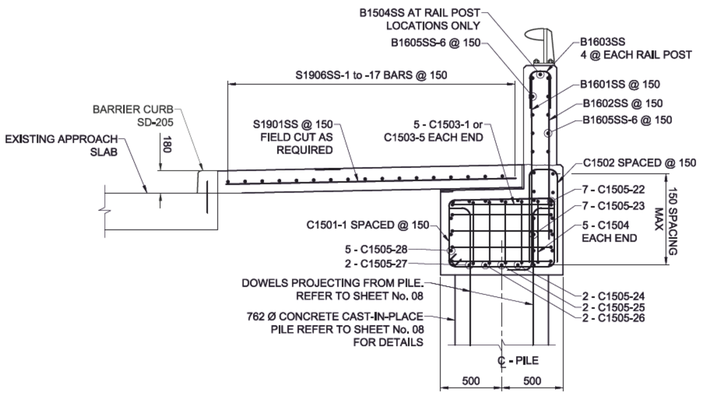

TYPICAL REINFORCING

NW PILE CAP, SIDEWALK & BARRIER
SCALE 1:25

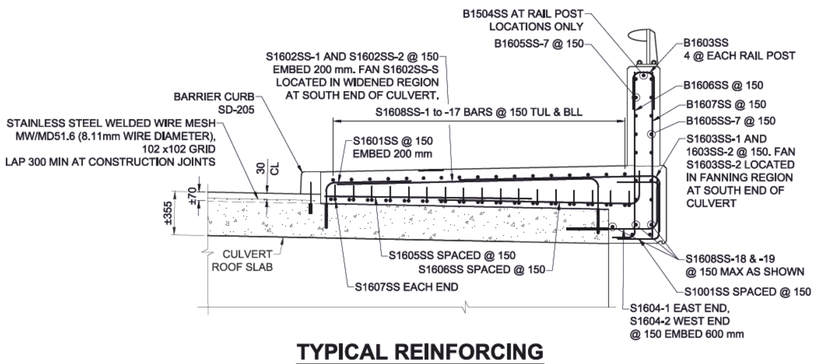

TYPICAL REINFORCING

EAST CULVERT OVERHANG, SIDEWALK & BARRIER
SCALE 1:25

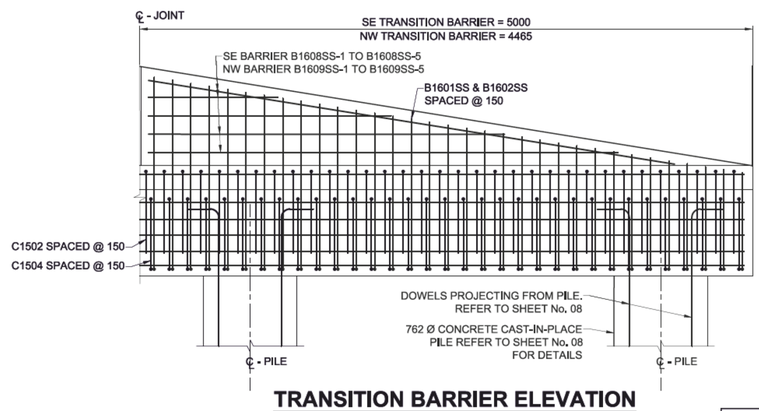

TRANSITION BARRIER ELEVATION

SE & NW TRANSITION BARRIER REINFORCING
SCALE 1:25

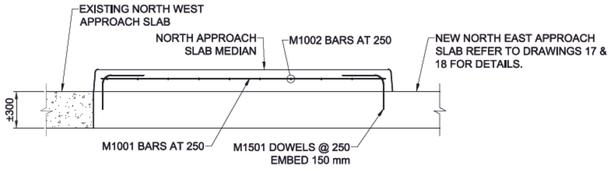

TYPICAL REINFORCING

MEDIAN OVER NORTH APPROACH SLAB
SCALE 1:25

ENGINEERS GEOSCIENTISTS MANITOBA
Certificate of Authorization
MORRISON HERSHFIELD
No. 1736

TENDER No. 233-2022

LOCATION APPROVED
UNDERGROUND STRUCTURES

SUPR, U/G STRUCTURES COMMITTEE — DATE

NOTE:
LOCATION OF UNDERGROUND STRUCTURES AS SHOWN ARE BASED ON THE BEST INFORMATION AVAILABLE BUT NO GUARANTEE IS GIVEN THAT ALL EXISTING UTILITIES ARE SHOWN OR THAT THE GIVEN LOCATIONS ARE EXACT. CONFIRMATION OF EXISTENCE AND EXACT LOCATION OF ALL SERVICES MUST BE OBTAINED FROM THE INDIVIDUAL UTILITIES BEFORE PROCEEDING WITH CONSTRUCTION.

METRIC
WHOLE NUMBERS INDICATE MILLIMETRES
DECIMALIZED NUMBERS INDICATE METRES

BM 23-018 ELEV 235.300 m — S.E. Cor. Notre Dame Ave. & Sherwin Rd., Tblt. in W. Conc. foundation No. 2070 Notre Dame Ave., 0.8 m S. & 0.7 m below Conc. block of N.W. Cor. of bldg.

No.	REVISIONS	YY/MM/DD	BY
C	ISSUED FOR TENDER	22/05/10	BE
B	ISSUED FOR 95% REVIEW	22/04/06	BE
A	ISSUED FOR 50% REVIEW	22/03/14	BE

MORRISON HERSHFIELD

DESIGNED BY	AGG	CHECKED BY	TH
DRAWN BY	AH	APPROVED BY	BE
HOR SCALE / VERT SCALE	AS SHOWN	RELEASED FOR CONSTRUCTION BY: VAIBHAV BANTHIA, P.ENG.	
DATE	22/03/14	DATE	22/05/10

PROFESSIONAL'S SEAL
PROVINCE OF MANITOBA — A.D.G. GILARSKI — Member 32144 — 2022-05-10 — REGISTERED PROFESSIONAL ENGINEER

CONSULTANT FILE NAME
220042500-Rte 90-Details01.dwg

Winnipeg

THE CITY OF WINNIPEG
PUBLIC WORKS DEPARTMENT
ENGINEERING DIVISION

REHABILITATION OF ROUTE 90 CULVERT OVER OMAND'S CREEK

REINFORCING DETAILS 1 OF 2

CITY DRAWING NUMBER: C315-21-14
SHEET 14 OF 27
DRAWING NUMBER: 14

ISO A1 - 594mm x 841mm

x:\Proj\2022\220042500-cofw rte 90 culvert over omands cre\09. cad\07 sheets\220042500-Rte 90-Details01.dwg Last Saved: 5/6/2022 5:22 PM by AHepponer Plotted: 5/10/2022 7:30 AM by Alex Heppner