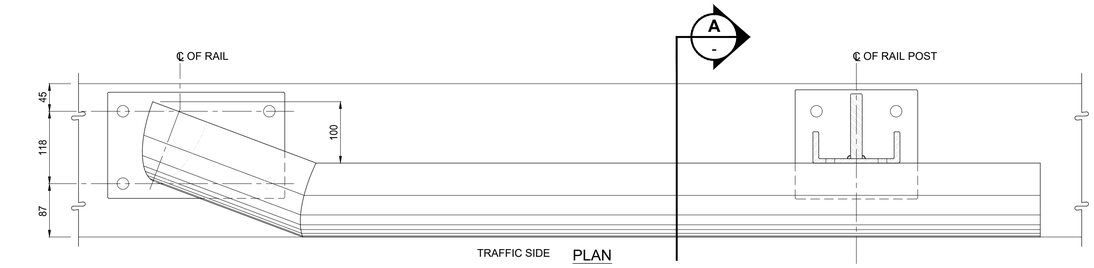

PLAN

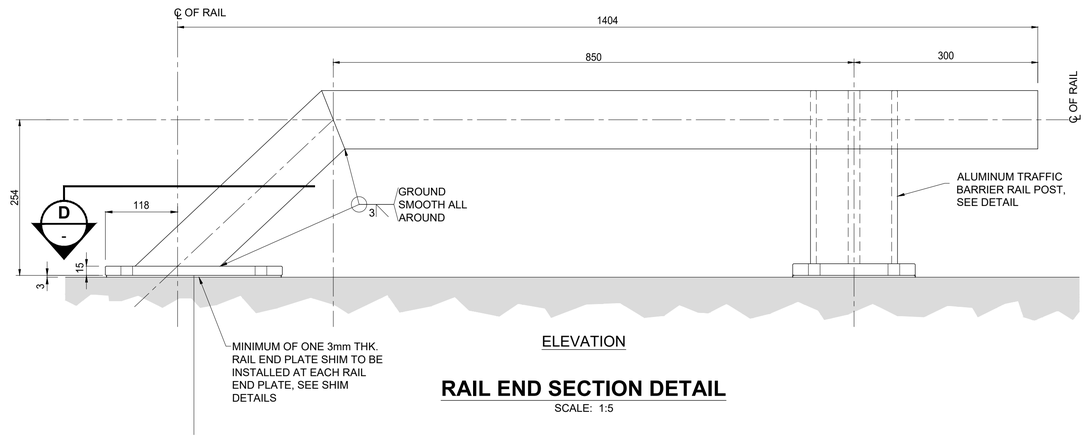

ELEVATION

RAIL END SECTION DETAIL

SCALE: 1:5

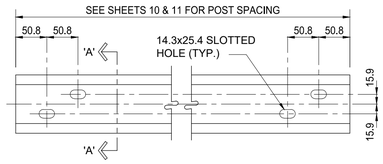

BARRIER RAIL DETAIL

SCALE: 1:5

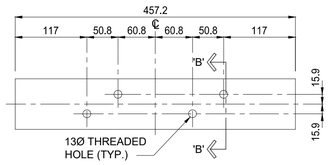

SPLICE BAR DETAIL

SCALE: 1:5

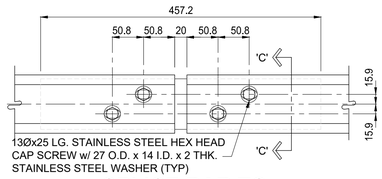

SPLICE BAR TO BARRIER RAIL ASSEMBLY

SCALE: 1:5

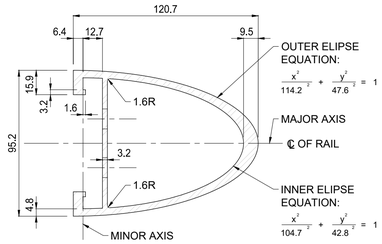

SECTION A-A

SCALE: 1:2

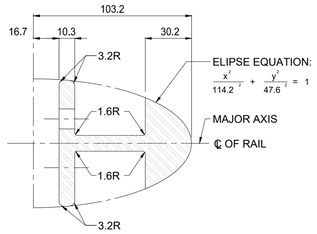

SECTION B-B

SCALE: 1:2

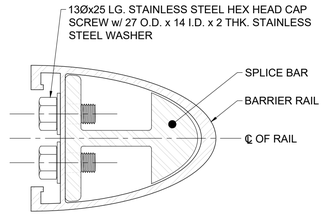

SECTION C-C

SCALE: 1:2

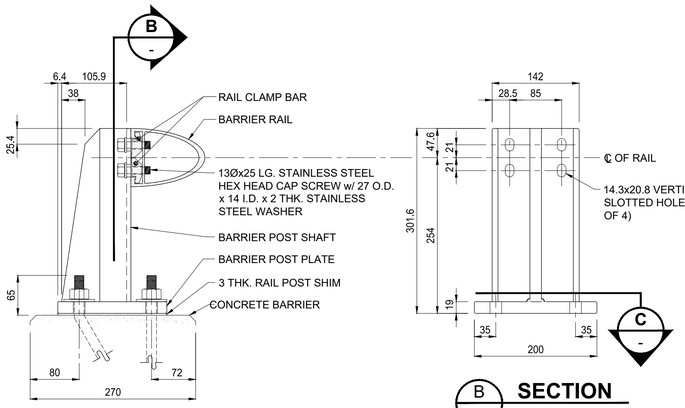

TRAFFIC BARRIER RAIL POST

SCALE: 1:5

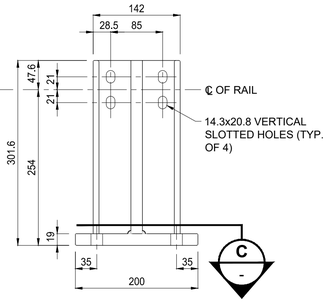

SECTION

SCALE: 1:5

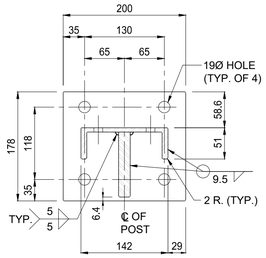

BARRIER POST PLATE SECTION

SCALE: 1:5

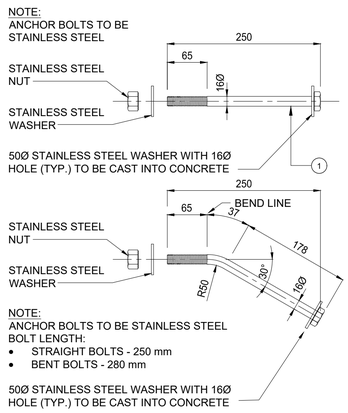

ANCHOR BOLT DETAIL

SCALE: 1:5

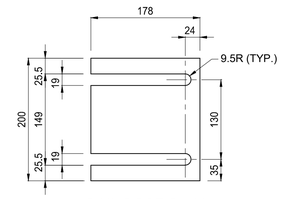

RAIL POST SHIM

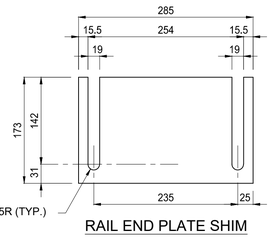

RAIL END PLATE SHIM

SHIM DETAILS

SCALE: 1:5

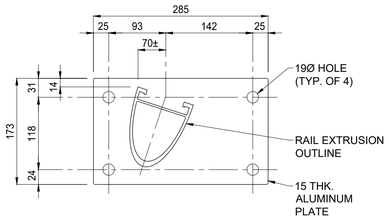

BARRIER RAIL END PLATE SECTION

SCALE: 1:5

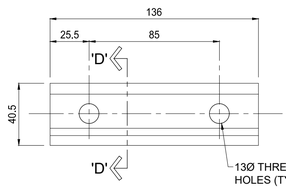

RAIL CLAMP BAR DETAIL

SCALE: 1:2

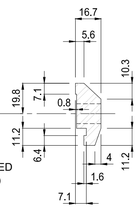

SECTION D-D

SCALE: 1:2

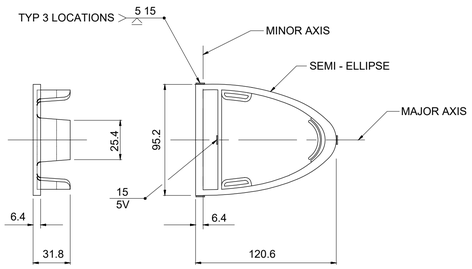

END CAP DETAIL

SCALE: 1:1

NOTES:

1. THE 4-19Ømm HOLES IN THE BARRIER POST AND RAIL PLATES ARE DESIGNED TO ACCOMMODATE 16Ømm RAIL POST ANCHOR BOLTS AS DETAILED. SUPPLY WITH EACH ANCHOR BOLT: ONE STAINLESS STEEL PLAIN WASHER, ONE STAINLESS STEEL LOCK WASHER, ONE STAINLESS STEEL HEX. NUT AND ONE 50Ø STAINLESS STEEL PLATE WASHER.
2. A COMBINATION OF 1.5, 3.0 AND/OR 6.0mm THK. ALUMINUM RAIL POST OR PLATE SHIMS ARE TO BE USED AS REQUIRED TO SET THE BARRIER RAIL TO THE SPECIFIED HEIGHT (MINIMUM 3.0mm SHIM REQUIRED AT EACH POST OR PLATE).
3. ALL EDGES AND CORNERS OF THE BARRIER POST PLATES AND EXTRUSIONS SHALL BE ROUNDED IN THE SHOP, TO A SMOOTH 2mm RADIUS TO THE SATISFACTION OF THE ENGINEER.
4. BOTTOM SURFACE OF THE SHIM (SURFACE IN CONTACT WITH CONCRETE) IS TO BE PAINTED WITH 2 COATS OF ALKALI RESISTANT BITUMINOUS PAINT, EACH COAT BEING 1mm IN THICKNESS.

SPECIFICATIONS:

1. EXTRUDED ALUMINUM SHAPES AND PLATES SHALL CONFORM TO THE REQUIREMENTS OF A.S.T.M. B221, ALLOY 6061-T6 OR ALLOY 6351-T5 (MINIMUM ELONGATION 10%)
2. THE STAINLESS STEEL HEX. HEAD AND SOCKET HEAD CAP SCREWS SHALL MEET THE REQUIREMENTS OF A.S.T.M. A276 TYPE 430 AND THE DIMENSIONAL REQUIREMENTS OF A.N.S.I. B18.3.
3. DIMENSIONAL TOLERANCES NOT SHOWN OR IMPLIED ARE INTENDED TO BE THOSE CONSISTENT WITH THE PROPER FUNCTIONING OF THE PART, INCLUDING ITS APPEARANCE AND ACCEPTED MANUFACTURING PRACTICES.
4. THE BARRIER POST SHAFT SHALL BE FABRICATED FROM A SINGLE CHANNEL-SHAPE EXTRUSION WELDED TO A PLATE SHAPE. THE BARRIER POST PLATE AND BARRIER POST SHAFT SHALL THEN BE WELDED TOGETHER.
5. WELDING SHALL CONFORM TO THE REQUIREMENTS OF CSA STANDARDS S224-1969, WELDING ALUMINUM DESIGN AND WORKMANSHIP AND W47.2-1987, ALUMINUM WELDING QUALIFICATION CODE. ALUMINUM FILLER ALLOY SHALL BE ONE OF THE FOLLOWING: ER4043, ER5183, ER5554, ER5556 AND ER5654.
6. THE CONTRACTOR SHALL SUBMIT COMPLETE SHOP DRAWINGS CONSISTING OF THREE PRINTS AND ONE REPRODUCIBLE SET TO THE CONTRACT ADMINISTRATOR FOR APPROVAL PRIOR TO FABRICATION OF ALUMINUM TRAFFIC BARRIER COMPONENTS.
7. ANTI-SEIZE COATING TO BE APPLIED TO ALL THREADED COMPONENTS WHEN BEING ASSEMBLED., I.E. LPS-3 MANUFACTURED BY HOLT-LLOYD (CANADA) LTD. MARKHAM, ONTARIO L3R 2Z3.

ENGINEERS GEOSCIENTISTS MANITOBA
Certificate of Authorization
MORRISON HERSHFIELD
No. 1736

TENDER No. 233-2022

LOCATION APPROVED
UNDERGROUND STRUCTURES

SUPR. U/G STRUCTURES COMMITTEE — DATE

NOTE:
LOCATION OF UNDERGROUND STRUCTURES AS SHOWN ARE BASED ON THE BEST INFORMATION AVAILABLE BUT NO GUARANTEE IS GIVEN THAT ALL EXISTING UTILITIES ARE SHOWN OR THAT THE GIVEN LOCATIONS ARE EXACT. CONFIRMATION OF EXISTENCE AND EXACT LOCATION OF ALL SERVICES MUST BE OBTAINED FROM THE INDIVIDUAL UTILITIES BEFORE PROCEEDING WITH CONSTRUCTION.

BM 23-018 — S.E. Cor. Notre Dame Ave. & Sherwin Rd., Tblt. in W. Conc. foundation No. 2070 Notre Dame Ave., 0.8 m S. & 0.7 m below Conc. block of N.W. Cor. of bldg.
ELEV 235.300 m

No.	REVISIONS	YY/MM/DD	BY
C	ISSUED FOR TENDER	22/05/10	BE
B	ISSUED FOR 95% REVIEW	22/04/06	BE
A	ISSUED FOR 50% REVIEW	22/03/14	BE

MORRISON HERSHFIELD

DESIGNED BY	AGG	CHECKED BY	TH
DRAWN BY	AH	APPROVED BY	BE
HOR SCALE / VERT SCALE	AS SHOWN	RELEASED FOR CONSTRUCTION BY: VAIBHAV BANTHIA, P.ENG.	
DATE	22/03/14	DATE	22/05/10

PROFESSIONAL'S SEAL
PROVINCE OF MANITOBA — A.D.G. GILARSKI — Member — 32144 — 2022-05-10 — REGISTERED PROFESSIONAL ENGINEER

CONSULTANT FILE NAME
220042500-Rte 90-Rail.dwg

Winnipeg
THE CITY OF WINNIPEG
PUBLIC WORKS DEPARTMENT
ENGINEERING DIVISION

REHABILITATION OF ROUTE 90 CULVERT OVER OMAND'S CREEK

ALUMINUM BARRIER DETAILS

CITY DRAWING NUMBER: C315-21-23
SHEET 23 OF 27
DRAWING NUMBER: 23

ISO A1 - 594mm x 841mm
X:\Prog\2022\220042500-cofw rte 90 culvert over omands cre\09. cad\07 sheets\220042500-Rte 90-Rail.dwg Last Saved: 5/2/2022 4:03 PM by ALazcanoPerez Plotted: 5/10/2022 12:34 PM by Alex Heppner