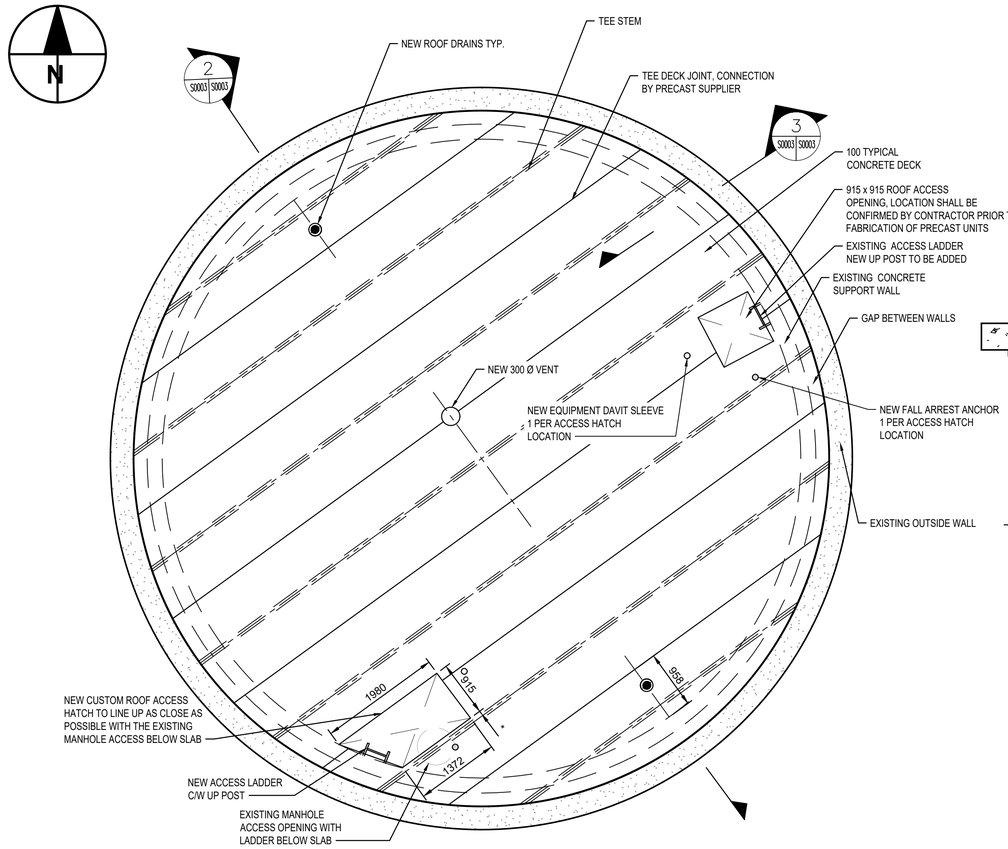

1 S0003 S0003 SURGE TOWER ROOF PLAN
SCALE: 1:50

NOTE: - GENERAL CONTRACTOR TO SITE SURVEY THE EXISTING OPENING LOCATIONS AND SUPPLY TO PRECAST SUPPLIER.
- DISTANCE DENOTED WITH A "*" SHALL BE KEPT TO A MINIMUM SUCH THAT THE NEW ACCESS HATCH IS LOCATED AS CLOSE AS POSSIBLE TO THE WEB OF THE PRECAST TEE.

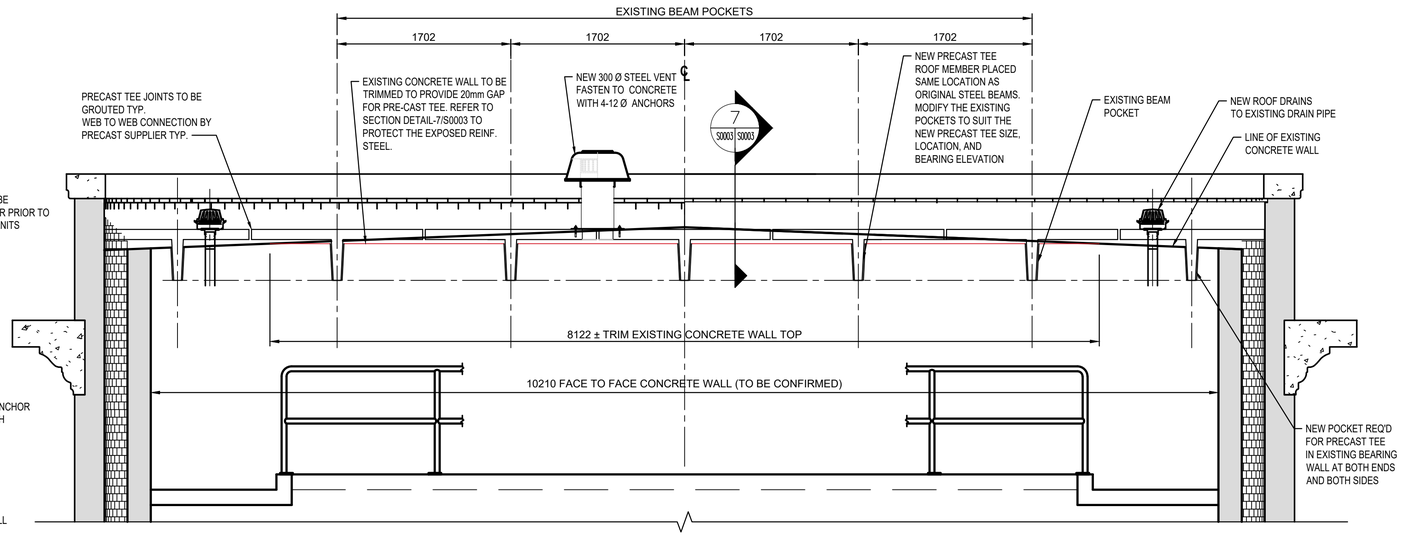

2 S0003 S0003 BUILDING SECTION
SCALE: 1:30

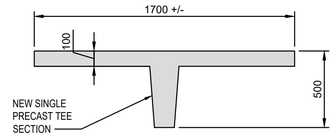

6 S0003 S0003 PRECAST TEE SECTION
SCALE: 1:20

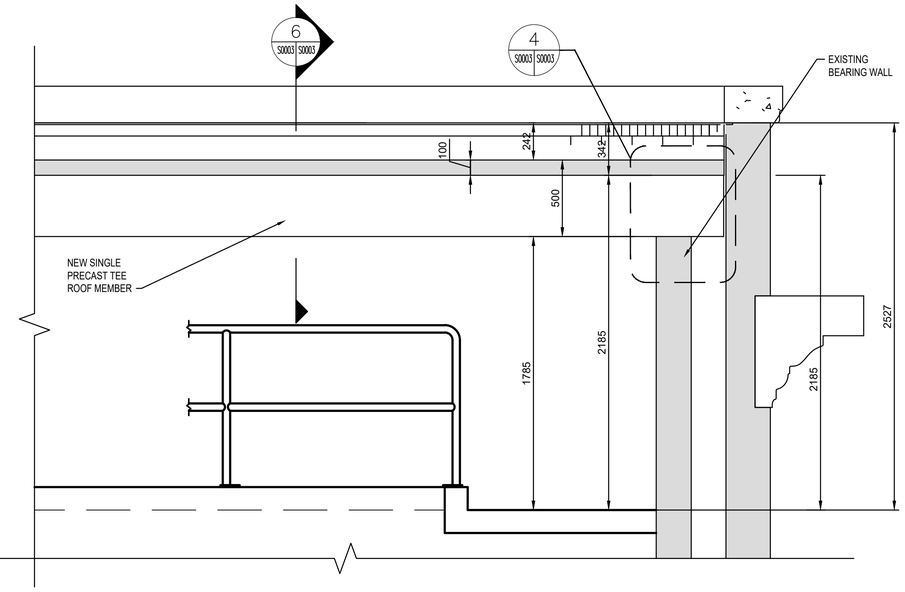

3 S0003 S0003 WALL SECTION
SCALE: 1:20

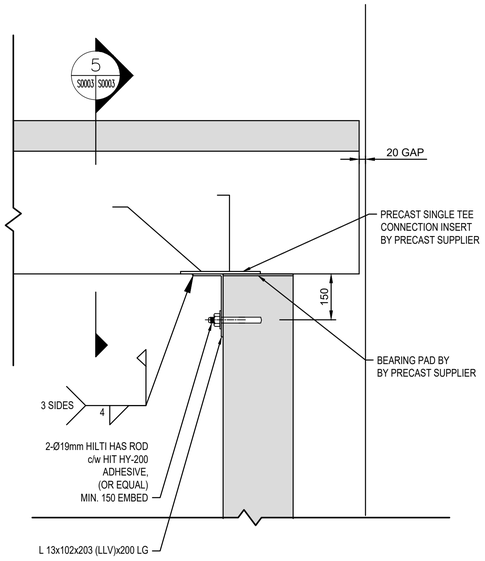

4 S0003 S0003 SECTION DETAIL
SCALE: 1:10

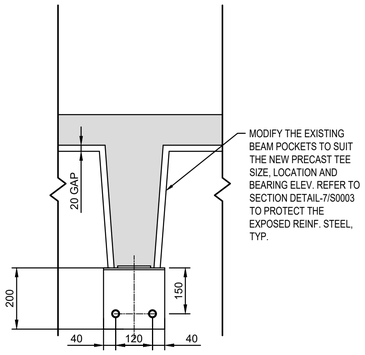

5 S0003 S0003 SECTION
SCALE: 1:10

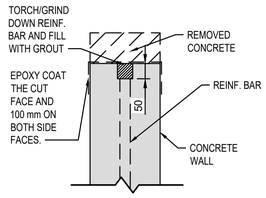

7 S0003 S0003 EXPOSED REBAR PROTECTION SECTION DETAIL
SCALE: 1:10

ROOF DESIGN LOADS (UNFACTORED)		
DEAD LOADS	ROOF LOAD	PRECAST SELF WEIGHT
	ROOFING SYSTEM	0.5 KPa
	ROOF COLLATERAL LOADS	1.0 KPa
SNOW LOADS	IMPORTANCE CATEGORY, Is = 1.25	Ss = 1.9 KPa Sr = 0.2 KPa
WIND LOADS	IMPORTANCE CATEGORY, Iw = 1.25	q(1/50) = 0.45 KPa

DRAWING NOTES

1. REFER TO DRAWING 1-0660R-S0001-001 FOR GENERAL RELEVANT NOTES.

ENGINEERS GEOSCIENTISTS MANITOBA
Certificate of Authorization
AECOM Canada Ltd.
No. 4671 Date: 2022-10-11

NO.	REVISIONS	DATE	DESIGN	CHECK
0	ISSUED FOR CONSTRUCTION	2022-10-11	GGP	MH

AECOM

DESIGNED BY: G. PROFETA	CHECKED BY: M. HOQUE
DRAWN BY: G. PROFETA	APPROVED BY:
SCALE:	RELEASED FOR CONSTRUCTION BY:
DATE: 2022-10-11	DATE:
CONSULTANT NO.: 60661011	

ENGINEER'S SEAL
PROVINCE OF MANITOBA
M. M. HOQUE
Member
30114
REGISTERED PROFESSIONAL ENGINEER
2022-10-11

Winnipeg
THE CITY OF WINNIPEG
WATER AND WASTE DEPARTMENT

TACHE BOOSTER PUMPING STATION
AND SURGE TOWER UPGRADES
STRUCTURAL
TACHE SURGE TOWER ROOF STRUCTURE
ROOF RECONSTRUCTION

CITY DRAWING NUMBER	SHEET	REV.	SIZE
1-0660R-S0003-001	13 of 13	0	A1

A1 SIZE - 594mm x 841mm

LAST SAVE: 2022/09/15 12:38 PM
PATH: L:\Legacy\CAWPG1FP001\Data\Projects\60661011\900-CAD_GIS\10-CAD\20-SHEETS\S\Structural Surge Tower\S0003.dwg