A1 SIZE – 594mm x 841mm

BREAKER PROTECTION SETTINGS

CIRCUIT BREAKER	MODEL		FRAME	SENSOR/ TRIP UNIT	LTPU (Ir)	LTD (tr)	STPU (Isd)	STD (tsd)	INST (Ii)
CSTE–U70.MCB	POWERPACT L SERIES	MICROLOGIC 5.3A (AMMETER)	600A	400A	400A	16 SEC.	9X (3600A)	0.4 SEC.	12X (4800A)
MCC–U71.MCB	POWERPACT P SERIES	MICROLOGIC 5.0 (AMMETER)	800A	600A	0.7 (420A)	12 SEC.	6X (2520A)	0.2 SEC.	6X (3600A)
MCC–U71.CB–U72E	POWERPACT L SERIES	MICROLOGIC 3.3S	400A	300A	300A	–	6X (1800A)	–	6X (2400A)
MCC–U71.MCP–U63	POWERPACT H SERIES	MICROLOGIC T–M	150A	(IN) 30A	(FLA) 1.5	–	–	–	(IM) AUTO – 1X
MCC–U71.MCP–U65	POWERPACT H SERIES	MICROLOGIC T–M	150A	(IN) 30A	(FLA) 3	–	–	–	(IM) AUTO – 1X
MCC–U72E.CB–U01	POWERPACT J SERIES	MICROLOGIC 3.2	250A	250A	200A	8 SEC.	–	–	5X (1250A)
MCC–U72E.CB–U02	POWERPACT J SERIES	MICROLOGIC 3.2	250A	250A	200A	8 SEC.	–	–	5X (1250A)
GEN–U72.MCB	(BY SUPPLIER)	(BY SUPPLIER)	300A	250A	250A	2 SEC.	8X (2000A)	0.2 SEC.	10X (2500A)
GEN–U72.LB	(BY SUPPLIER)	(BY SUPPLIER)	300A	250A	–	–	–	–	4X (1000A)

LEGEND:

- EXISTING
- NEW WORK
- PLC — PLC CONNECTION
- PM — MULTIFUNCTION POWER METER

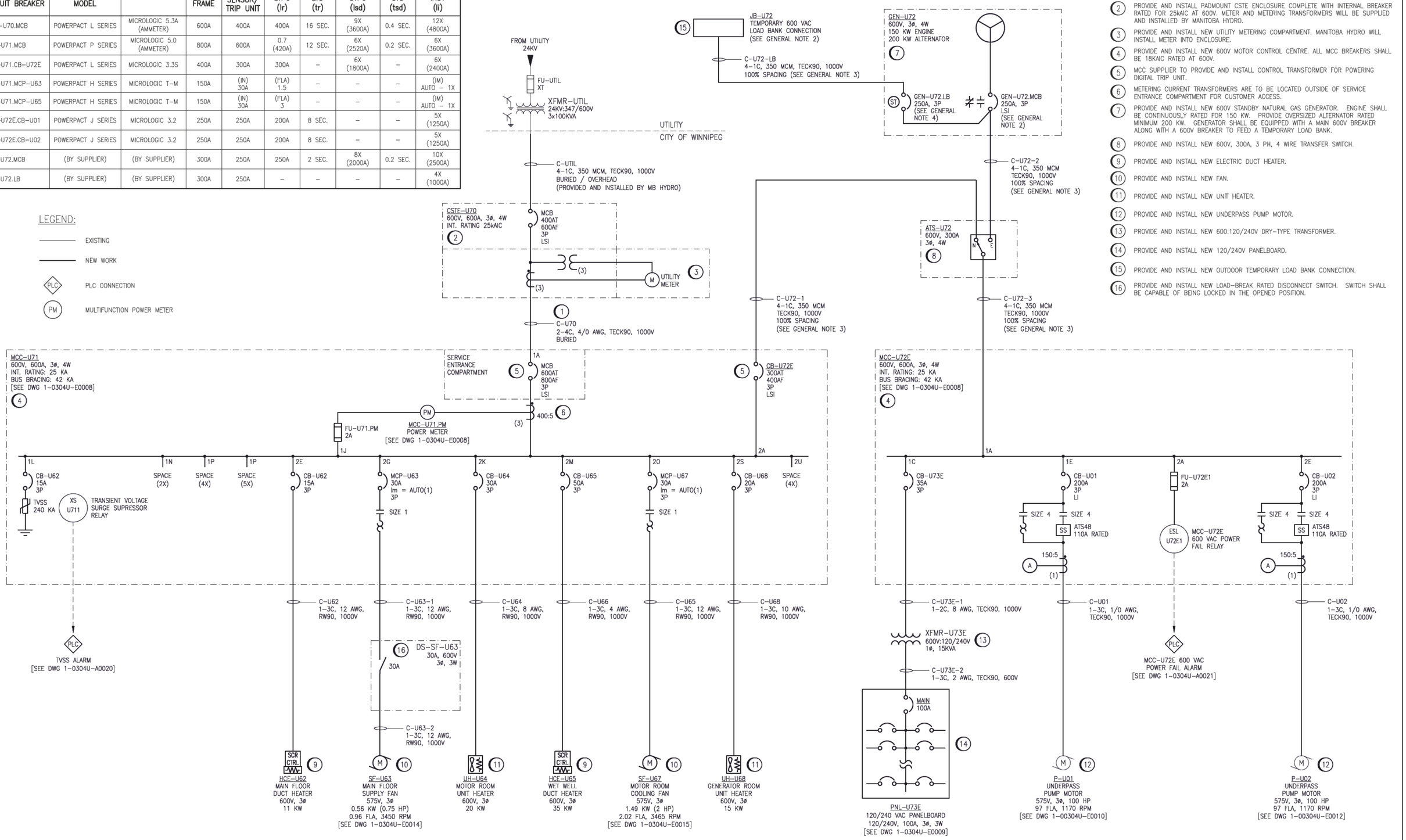

SPECIFIC NOTES:

1. PROVIDE AND INSTALL NEW DIRECT BURIED CABLING BETWEEN CSTE–U70 AND MCC–U71.
2. PROVIDE AND INSTALL PADMOUNT CSTE ENCLOSURE COMPLETE WITH INTERNAL BREAKER RATED FOR 25kAIC AT 600V. METER AND METERING TRANSFORMERS WILL BE SUPPLIED AND INSTALLED BY MANITOBA HYDRO.
3. PROVIDE AND INSTALL NEW UTILITY METERING COMPARTMENT. MANITOBA HYDRO WILL INSTALL METER INTO ENCLOSURE.
4. PROVIDE AND INSTALL NEW 600V MOTOR CONTROL CENTRE. ALL MCC BREAKERS SHALL BE 18KAIC RATED AT 600V.
5. MCC SUPPLIER TO PROVIDE AND INSTALL CONTROL TRANSFORMER FOR POWERING DIGITAL TRIP UNIT.
6. METERING CURRENT TRANSFORMERS ARE TO BE LOCATED OUTSIDE OF SERVICE ENTRANCE COMPARTMENT FOR CUSTOMER ACCESS.
7. PROVIDE AND INSTALL NEW 600V STANDBY NATURAL GAS GENERATOR. ENGINE SHALL BE CONTINUOUSLY RATED FOR 150 KW. PROVIDE OVERSIZED ALTERNATOR RATED MINIMUM 200 KW. GENERATOR SHALL BE EQUIPPED WITH A MAIN 600V BREAKER ALONG WITH A 600V BREAKER TO FEED A TEMPORARY LOAD BANK.
8. PROVIDE AND INSTALL NEW 600V, 300A, 3 PH, 4 WIRE TRANSFER SWITCH.
9. PROVIDE AND INSTALL NEW ELECTRIC DUCT HEATER.
10. PROVIDE AND INSTALL NEW FAN.
11. PROVIDE AND INSTALL NEW UNIT HEATER.
12. PROVIDE AND INSTALL NEW UNDERPASS PUMP MOTOR.
13. PROVIDE AND INSTALL NEW 600:120/240V DRY–TYPE TRANSFORMER.
14. PROVIDE AND INSTALL NEW 120/240V PANELBOARD.
15. PROVIDE AND INSTALL NEW OUTDOOR TEMPORARY LOAD BANK CONNECTION.
16. PROVIDE AND INSTALL NEW LOAD–BREAK RATED DISCONNECT SWITCH. SWITCH SHALL BE CAPABLE OF BEING LOCKED IN THE OPENED POSITION.

GENERAL NOTES:

1. ALL EQUIPMENT AND CABLING SHOWN IS NEW AND IS TO BE PROVIDED BY THE CONTRACTOR UNLESS OTHERWISE INDICATED AS EXISTING.
2. BREAKER SIZE TO BE DETERMINED BY MANUFACTURER. THE BREAKER SHALL HAVE FIELD ADJUSTABLE SETTING INCLUDING: LONG TIME PICKUP, LONG TIME DELAY, SHORT TIME PICKUP, SHORT TIME DELAY AND INSTANTANEOUS PICKUP. BREAKER SHALL INCLUDE AUXILIARY CONTACTS (NORMALLY OPEN AND NORMALLY CLOSED) FOR MONITORING BREAKER STATUS.
3. CONTRACTOR TO MAINTAIN A MINIMUM OF 100% CABLE DIAMETER SPACING BETWEEN CABLING.
4. BREAKER SHALL INCLUDE SHUNT TRIP RATED FOR 24 VDC.
5. ALL BREAKER PROTECTION SETTINGS SHALL BE ADJUSTED BY THE CONTRACTOR TO MATCH THE SETTINGS SHOWN.

DRAWING NUMBER	REFERENCE DRAWINGS
1–0304U–E0017	ELECTRICAL SITE PLAN AND DETAILS
1–0304U–E0009	ELECTRICAL SCHEDULES AND PHOTOCELL DETAILS
1–0304U–E0008	MCC ELEVATION AND DETAILS, MCC–U71 AND MCC–U72E
1–0304U–E0007	CONNECTION DIAGRAM AUTOMATIC TRANSFER SWITCH ATS–U72
1–0304U–E0006	GROUNDING INSTALLATION DETAILS PUMPING STATION & GENERATOR RM
1–0304U–E0004	ELECTRICAL PLAN LAYOUT PUMPING STATION & GENERATOR ROOM

APEGM Certificate of Authorization SNC-Lavalin Inc. No. 4489

NO.	REVISIONS	DATE	DESIGN	CHECK
00	ISSUED FOR CONSTRUCTION	2021/03/24	KS	BC

SNC·LAVALIN

SNC–LAVALIN INC.
148 Nature Park Way
Winnipeg, MB, Canada R3P 0X7
204–786–8080

DESIGNED BY: K.SAPIAK	CHECKED BY: B. CLEVEN
DRAWN BY: C. DUBON	APPROVED BY: B. CLEVEN
SCALE: N.T.S.	ISSUED FOR CONSTRUCTION BY: K. ZUREK
DATE: 2019/05/23	DATE: 2021/03/24
CONSULTANT NO.:	

ENGINEER'S SEAL
PROVINCE OF MANITOBA — K. K. SAPIAK Member 33675 — REGISTERED PROFESSIONAL ENGINEER
2021-03-24

Winnipeg — THE CITY OF WINNIPEG
WATER AND WASTE DEPARTMENT

KEEWATIN UNDERPASS PUMPING STATION
2021 UPGRADES
ELECTRICAL SINGLE LINE DIAGRAM

CITY DRAWING NUMBER	SHEET	REV.	SIZE
1–0304U–E0002	001	00	A1

1–0304U–E0003–001.dwg

LAST SAVE: 2021/03/24 – 7:35am
PATH: \\WINPDC1\PROJ$\66533$\4ENG\47ELE\DD – General DWG\1–0304U–E0003–001.dwg