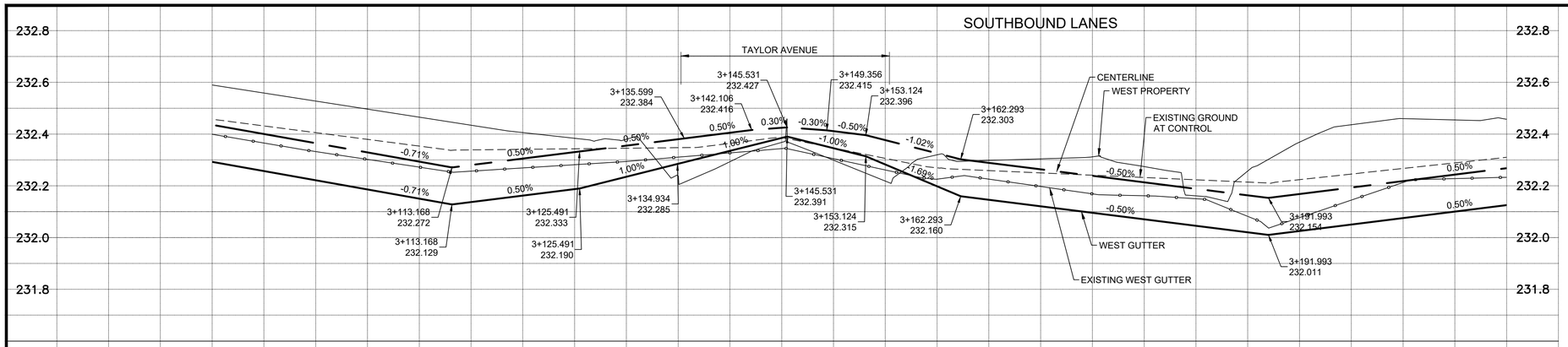

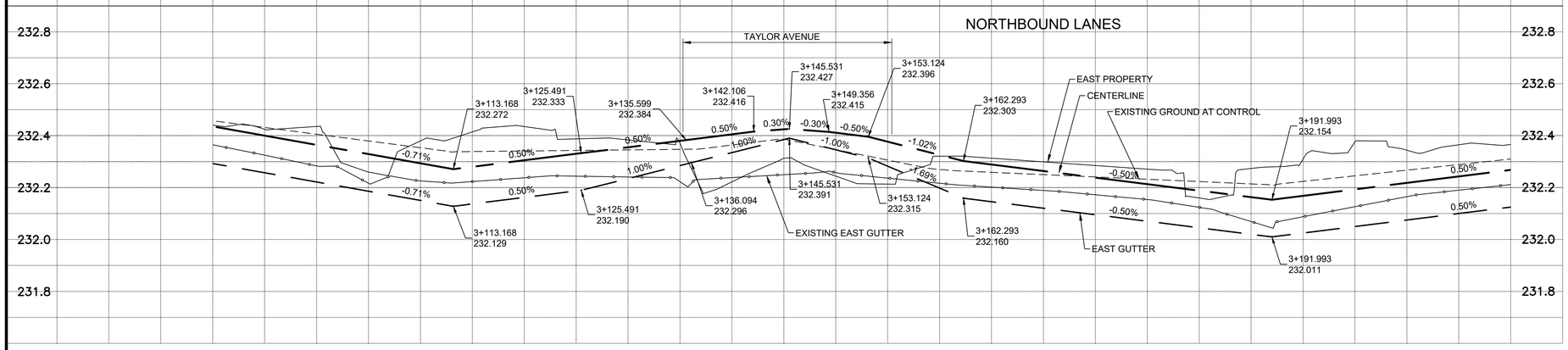

NOTES:

1. ADJUST EXISTING MANHOLES AS REQUIRED.
2. ADJUST ALL AFFECTED EXISTING WATERMAIN AND WATER SERVICE VALVES TO GRADE.
3. FOR CB LEADS AND UNDERGROUND INFO SEE SHEETS 29 TO 33.
4. INSTALL 18m OF SUBDRAIN EACH SIDE OF LOW POINTS AND HIGH SIDE OF FLYBYS AS PER SD-245 c/w CAPPED ENDS.
5. PRIVATE APPROACHES ARE 200mm REINFORCED CONCRETE WITH 100mm BASE COURSE, 225mm-50mm SUB-BASE AND NON-WOVEN GEOTEXTILE .
6. BULLNOSES, APPROACHES AND INTERSECTION RADII ARE TO BE INTEGRAL MODIFIED BARRIER CURB.
7. SEE DETAILS FOR EXCAVATION SUB-BASE PLACEMENT AND SUB-GRADE CROSS-FALL ON SHEET 28 FOR WORKING NEAR SHALLOW DUCT LINES.

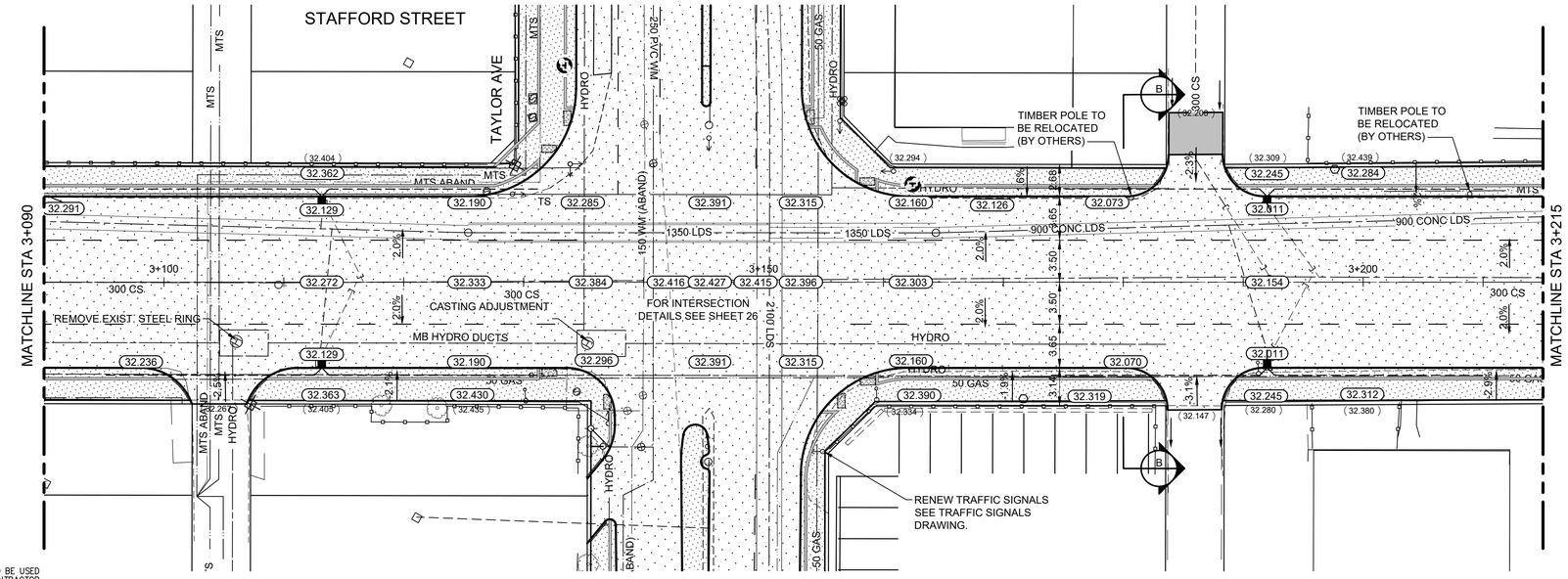

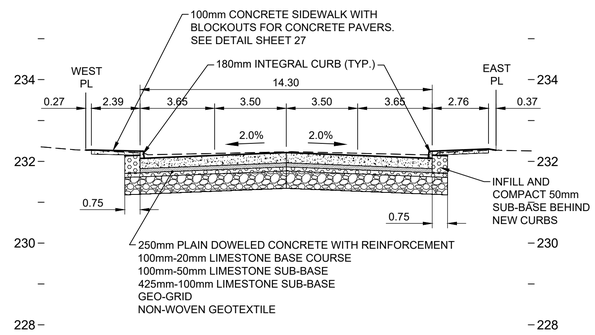

B / - SECTION AT STA 3+180
1:150H 1:75V

WARNING

IF POWER EQUIPMENT OR EXPLOSIVES ARE TO BE USED FOR EXCAVATION ON THIS PROJECT THE CONTRACTOR MUST:
1) NOTIFY THE GAS COMPANY OF THE PROPOSED LOCATION OF EXCAVATION.
2) TAKE PRECAUTION TO AVOID DAMAGE TO GAS COMPANY INSTALLATIONS.
SEE PROVINCIAL REGULATION 140/92 FOR DETAILS

METRIC
WHOLE NUMBERS INDICATE MILLIMETRES
DECIMALIZED NUMBERS INDICATE METRES

ENGINEERS GEOSCIENTISTS MANITOBA
Certificate of Authorization
Stantec Consulting Ltd.
No. 1301

EXISTING	LEGEND-PLAN	PROPOSED	EXISTING	LEGEND-PLAN	PROPOSED	EXISTING	LEGEND-PROFILE	PROPOSED
150 WM	WATERMAIN	150 WM		HYDRO			℄ PROFILE	
	HYDRANT			M.T.S.			NORTH OR WEST GUTTER	
	VALVE			CONCRETE			SOUTH OR EAST GUTTER	
300 LDS	LAND DRAINAGE SEWER	300 LDS		ASPHALT			NORTH OR WEST PL	
250 WWS	WASTE WATER SEWER	250 WWS		SIDEWALK			SOUTH OR EAST PL	
	MANHOLE			PROPERTY LINE				
	CATCH BASIN			SURVEY BAR				
	CURB INLET/CATCH PIT			DITCH				
	TRANSIT STOP		(31.334)	ELEVATION	(32.231)			
	CULVERT			SIDEWALK RAMP				
	GAS							

LOCATION APPROVED
UNDERGROUND STRUCTURES

SUPV. U/G STRUCTURES COMMITTEE — DATE

NOTE:
LOCATION OF UNDERGROUND STRUCTURES AS SHOWN ARE BASED ON THE BEST INFORMATION AVAILABLE BUT NO GUARANTEE IS GIVEN THAT ALL EXISTING UTILITIES ARE SHOWN OR THAT THE GIVEN LOCATIONS ARE EXACT. CONFIRMATION OF EXISTENCE AND EXACT LOCATION OF ALL SERVICES MUST BE OBTAINED FROM THE INDIVIDUAL UTILITIES BEFORE PROCEEDING WITH CONSTRUCTION.

B.M.
ELEV.

NO.	REVISIONS	DATE	BY
0	ISSUED FOR TENDER	22.01.06	K.W.R.

Stantec
500 - 311 Portage Avenue, Winnipeg MB Canada
www.stantec.com

DESIGNED BY	T.G.	CHECKED BY	K.W.R.
DRAWN BY	M.K.	APPROVED BY	K.W.R.
HOR. SCALE:	1:250	RELEASED FOR CONSTRUCTION:	
VERTICAL:	1:10		
DATE	2021/01/25	DATE	

ENGINEER'S SEAL
PROVINCE OF MANITOBA
K.W. RAE
2022/01/06
REGISTERED PROFESSIONAL ENGINEER

CONSULTANT DRAWING N0.
C-221

Winnipeg
THE CITY OF WINNIPEG
PUBLIC WORKS DEPARTMENT
ENGINEERING DIVISION

2019-2023 STAFFORD/TAYLOR/CORYDON
TENDER 2
STAFFORD STREET
STA 3+090 TO STA 3+215
ROADWORKS - RECONSTRUCTION

SHEET 14 OF 53
CAD FILE DRAWING NUMBER 08020c-220-932.dwg
CITY DRAWING NUMBER P-3526-4

U:\113708020\03000_drawing\03002_sheet_files\02_civil\Tender2\08020c-220-932.dwg
2021/12/24-9:42 PM By: kcorthorne,c. Toronto