STAFFORD STREET - UNDERGROUND WORKS - STAGE 1

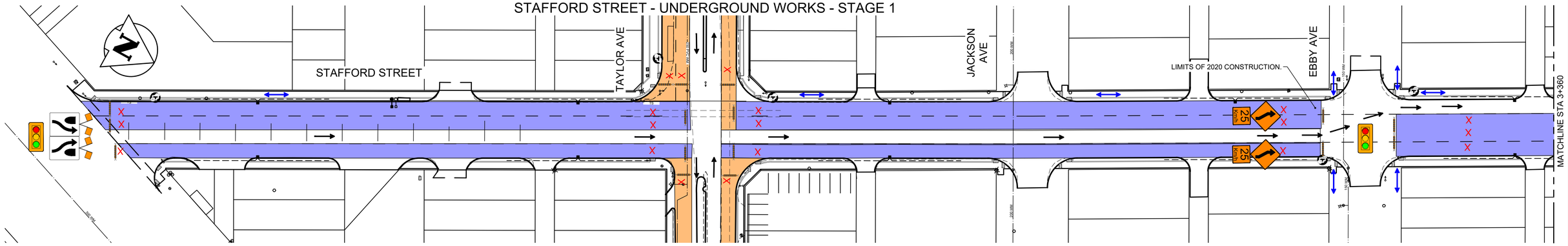

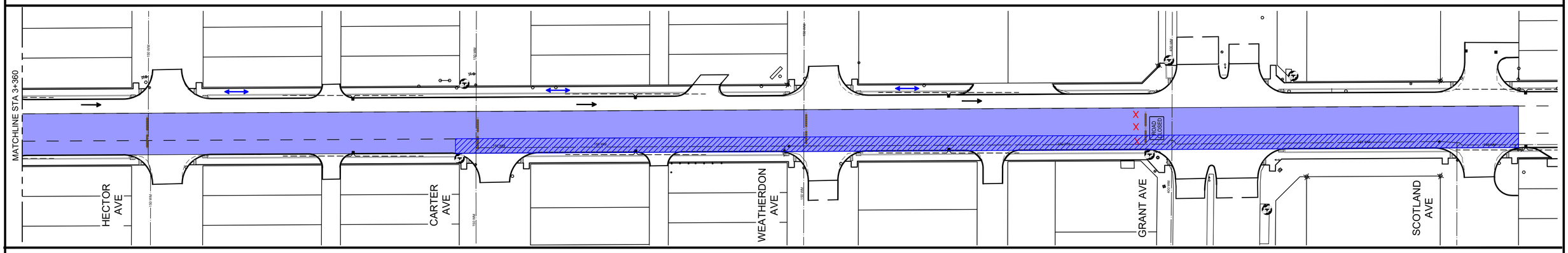

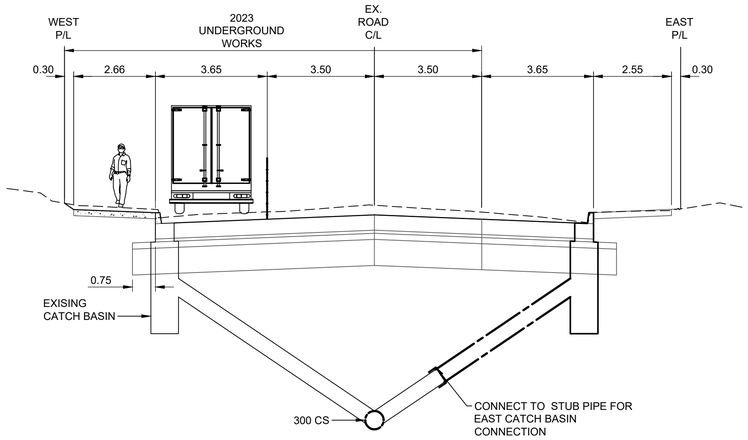

2023 STAFFORD UG WORKS NORTH OF HECTOR

SCALE 1:100

LEGEND

- 2023 CONSTRUCTION STAFFORD STAGE 1
- 2023 CONSTRUCTION TAYLOR STAGE 1
- WATERMAIN WORK AREA
- TEMPORARILY CLOSED TRANSIT STOP
- TEMPORARY TRANSIT STOP
- TRAFFIC FLOW
- LANE CLOSED TO TRAFFIC
- PEDESTRIAN AND CYCLIST FLOW (AS APPLICABLE)

NOTES

STAFFORD STAGE 1

1. COMPLETE STAFFORD UG WORKS.
2. MAINTAIN ACCESSES TO BUSINESSES, SIDE STREETS AND ALLEYS.
3. MAINTAIN SINGLE NB LANE IN STAFFORD EAST GUTTER.
4. MAINLINE SEWER CONNECTIONS AND NEW LEADS HAVE BEEN INSTALLED BETWEEN PEMBINA HWY AND HECTOR AVENUE.
5. EXCAVATIONS IN THE EAST LANES BETWEEN PEMBINA HWY AND HECTOR AVENUE TO BE RESTORED WITH ASPHALT.
6. MAINTAIN SINGLE LANE CLOSURE IN DOUBLE LEFT TURN FROM NORTH BOUND PEMBINA HWY TO NORTH BOUND STAFFORD STREET FOR THE DURATION OF THE UG STAGE.

WARNING

IF POWER EQUIPMENT OR EXPLOSIVES ARE TO BE USED FOR EXCAVATION ON THIS PROJECT THE CONTRACTOR MUST:

1) NOTIFY THE GAS COMPANY OF THE PROPOSED LOCATION OF EXCAVATION.

2) TAKE PRECAUTION TO AVOID DAMAGE TO GAS COMPANY INSTALLATIONS.

SEE PROVINCIAL REGULATION 140/92 FOR DETAILS

METRIC

WHOLE NUMBERS INDICATE MILLIMETRES
DECIMALIZED NUMBERS INDICATE METRES

EXISTING	LEGEND-PLAN	PROPOSED	EXISTING	LEGEND-PLAN	PROPOSED	EXISTING	LEGEND-PROFILE	PROPOSED
150 WM	WATERMAIN	150 WM		HYDRO				
	HYDRANT			M.T.S.				
	VALVE			CONCRETE				
300 LDS	LAND DRAINAGE SEWER	300 LDS		ASPHALT				
250 WWS	WASTE WATER SEWER	250 WWS		SIDEWALK				
	MANHOLE			MILL JOINT				
	CATCH BASIN			PROPERTY LINE				
	CURB INLET/CATCH PIT			SURVEY BAR				
	TRANSIT STOP			DITCH				
	CULVERT		(31.334)	ELEVATION	(32.231)			
	GAS			SIDEWALK RAMP				

LOCATION APPROVED
UNDERGROUND STRUCTURES

SUPV. U/G STRUCTURES COMMITTEE — DATE

NOTE:
LOCATION OF UNDERGROUND STRUCTURES AS SHOWN ARE BASED ON THE BEST INFORMATION AVAILABLE BUT NO GUARANTEE IS GIVEN THAT ALL EXISTING UTILITIES ARE SHOWN OR THAT THE GIVEN LOCATIONS ARE EXACT. CONFIRMATION OF EXISTENCE AND EXACT LOCATION OF ALL SERVICES MUST BE OBTAINED FROM THE INDIVIDUAL UTILITIES BEFORE PROCEEDING WITH CONSTRUCTION.

B.M.
ELEV.

NO.	REVISIONS	DATE	BY
0	ISSUED FOR TENDER	22.01.06	K.W.R.

Stantec
500 - 311 Portage Avenue, Winnipeg MB Canada
www.stantec.com

DESIGNED BY	T.G.	CHECKED BY	K.W.R.
DRAWN BY	V.K.	APPROVED BY	K.W.R.
HOR. SCALE: VERTICAL:	1:500	RELEASED FOR CONSTRUCTION:	
DATE	2021/02/16	DATE	

ENGINEERS GEOSCIENTISTS MANITOBA
Certificate of Authorization
Stantec Consulting Ltd.
No. 1301

ENGINEERS GEOSCIENTISTS MANITOBA — PROVINCE OF MANITOBA — K.W. RAE — 2022/01/06 — REGISTERED PROFESSIONAL ENGINEER

CONSULTANT DRAWING NO.
C-722

Winnipeg

THE CITY OF WINNIPEG
PUBLIC WORKS DEPARTMENT
ENGINEERING DIVISION

2019-2023 STAFFORD/TAYLOR/CORYDON
TENDER 2
STAFFORD STREET
PEMBINA HWY TO GRANT AVE
2023 CONSTRUCTION - STAGING UG

SHEET 48 OF 53

CAD FILE DRAWING NUMBER
08020c-722-932.dwg

CITY DRAWING NUMBER
P-3526-35

U:\137080200\0300_drawings\0300_sheet files\02_civil\Tender2\08020c-722-932.dwg
2022/01/04 10:17 AM By: Kowalewski, Vasilio