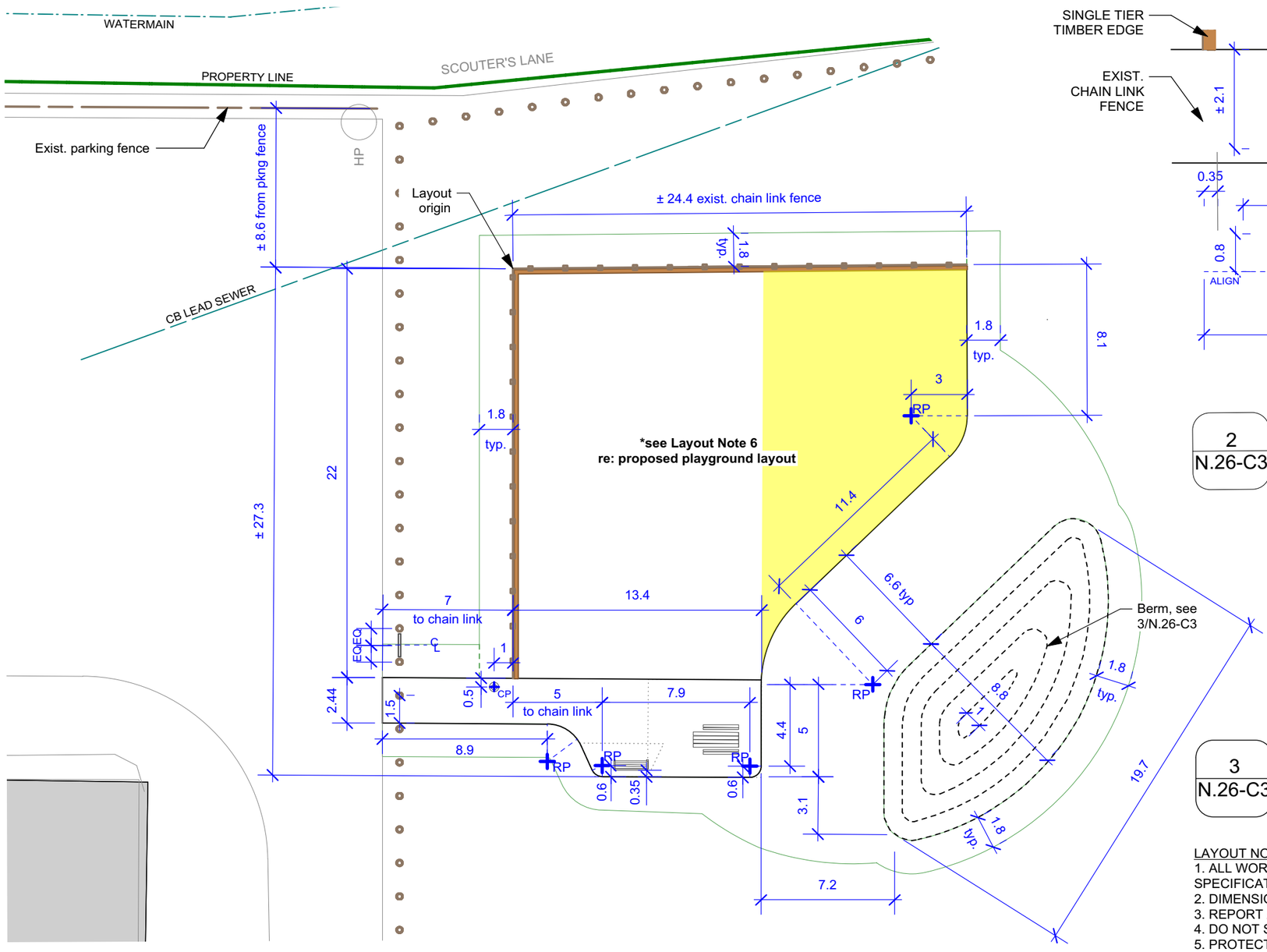

1 N.26-C3 Layout Plan
Scale: 1:250

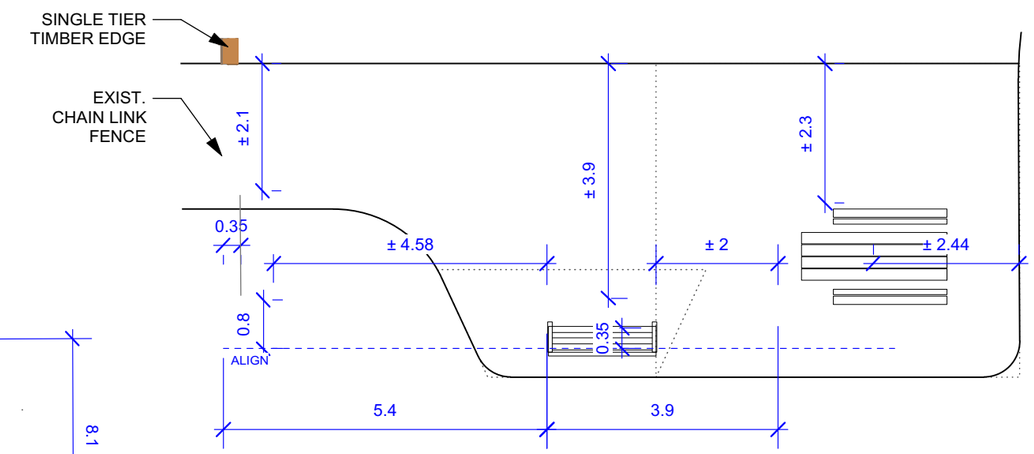

2 N.26-C3 Site Furniture Layout Plan
Scale: 1:100

0 1 5 m

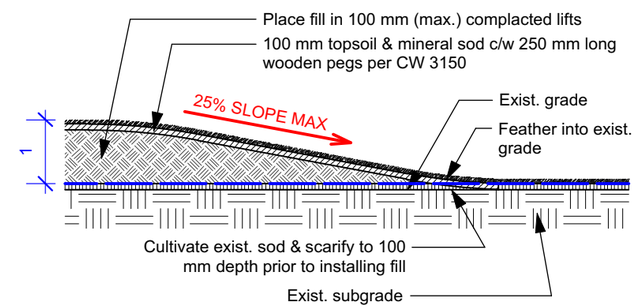

3 N.26-C3 Berm Section
Scale: 1:100

0 1 5 m

LAYOUT NOTES
1. ALL WORK TO CONFORM TO CURRENT CITY OF WINNIPEG STANDARD CONSTRUCTION SPECIFICATIONS AND DETAILS UNLESS OTHERWISE NOTED.
2. DIMENSIONS ARE IN **METERS** UNLESS OTHERWISE NOTED.
3. REPORT ANY DISCREPANCIES TO THE CONTRACT ADMINISTRATOR IMMEDIATELY.
4. DO NOT SCALE DRAWING.
5. PROTECT EXISTING TREES TO REMAIN.
6. LAYOUT WITHIN HIGHLIGHTED AREA MAY BE MODIFIED TO MAXIMIZE PLAY VALUE AT NO ADDITIONAL COST TO SPECIFIED BUDGET ON FORM B: PRICES. SEE MATERIALS NOTE 1 ON DWG. NO. N.26-C2.

CONTRACTOR TO CONFIRM ALL DIMENSIONS AND REPORT ANY DISCREPANCIES TO CONTRACT ADMINISTRATOR PRIOR TO CONSTRUCTION. LOCATION OF UNDERGROUND STRUCTURES AS SHOWN ARE BASED ON THE BEST INFORMATION AVAILABLE BUT NO GUARANTEE IS GIVEN THAT ALL EXISTING UTILITIES ARE SHOWN OR THAT THE GIVEN LOCATIONS ARE EXACT. CONFIRMATION OF EXISTENCE AND EXACT LOCATION OF ALL SERVICES MUST BE OBTAINED FROM THE INDIVIDUAL UTILITIES BEFORE PROCEEDING WITH CONSTRUCTION.

Winnipeg

THE CITY OF WINNIPEG
Planning, Property and Development Department
Planning and Land Use Division
Unit 15 - 30 Fort Street, Winnipeg, MB, (R3C 4X5)

DESIGNED BY	LL	CHECKED BY	
DRAWN BY	LL	APPROVED BY	
HORIZ. SCALE / VERT. SCALE	AS NOTED		
DATE	Feb 11/20		

MANAGER, PARK AND OPEN SPACES — DATE

MANAGER, PLANNING AND LAND USE DIVISION — DATE

DRAWING TITLE
Norberry-Glenlee Community Centre Playground Development
Layout Plan

SITE ADDRESS 26 Molgat Ave.

DRAWING NO.
N.26-C3

BID OPPORTUNITY NO.
91-2020

06-01-23 Template.mcd Monday, January 23, 2006