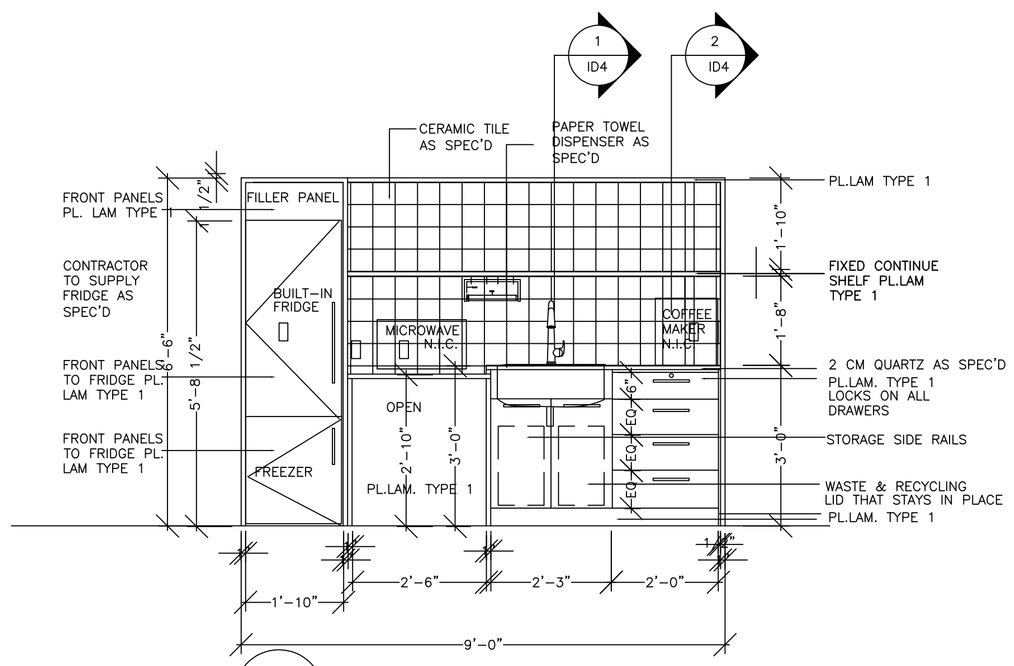

6 / ID4 ELEVATION COFFEE COUNTER
SCALE 1/2" = 1'-0"

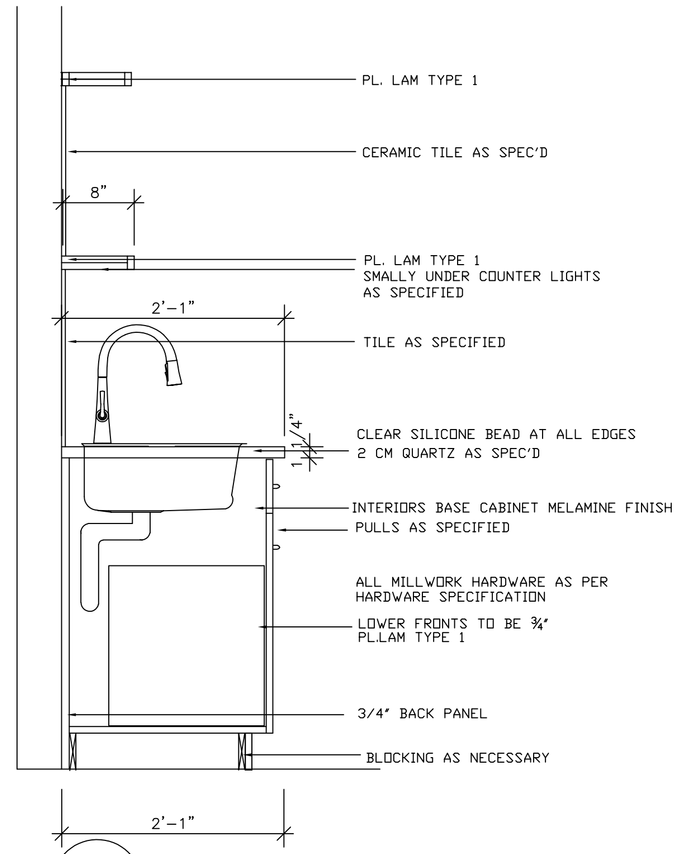

1 / ID4 SECTION - COFFEE COUNTER
SCALE 1" = 1'-0"

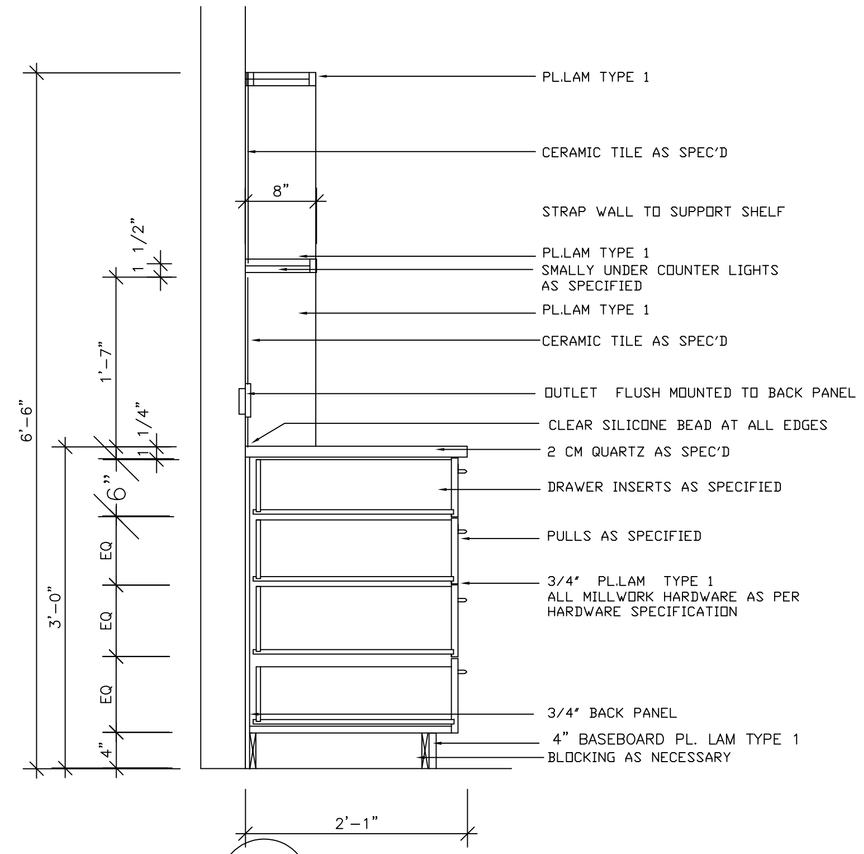

2 / ID4 SECTION - COFFEE COUNTER
SCALE 1" = 1'-0"

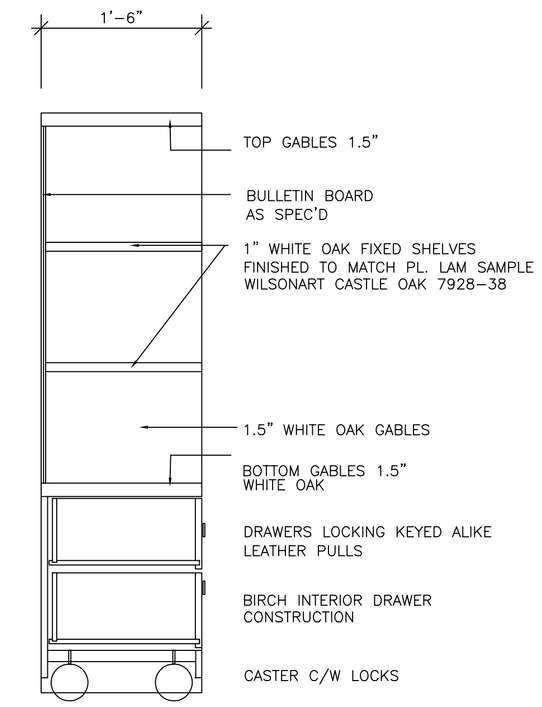

5 / A4 SECTION - MOBILE DISPLAY UNIT
SCALE 1" = 1'-0"

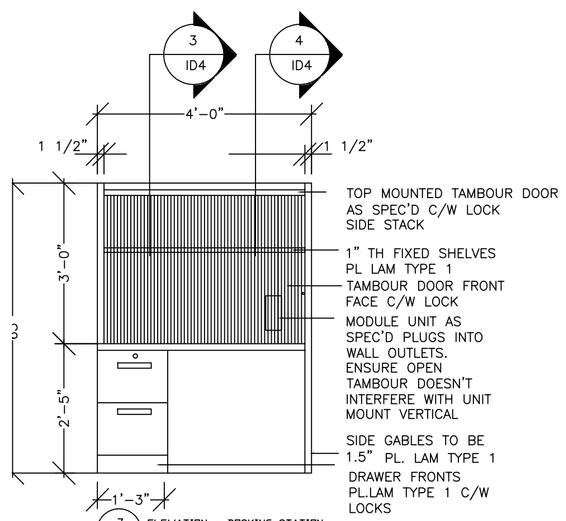

7 / A4 ELEVATION - DOCKING STATION
SCALE 1/2" = 1'-0"

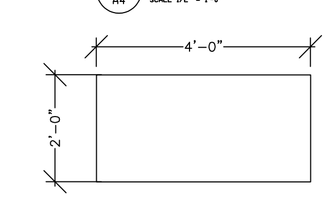

PLAN- DOCKING STATION
SCALE 1/2" = 1'-0"

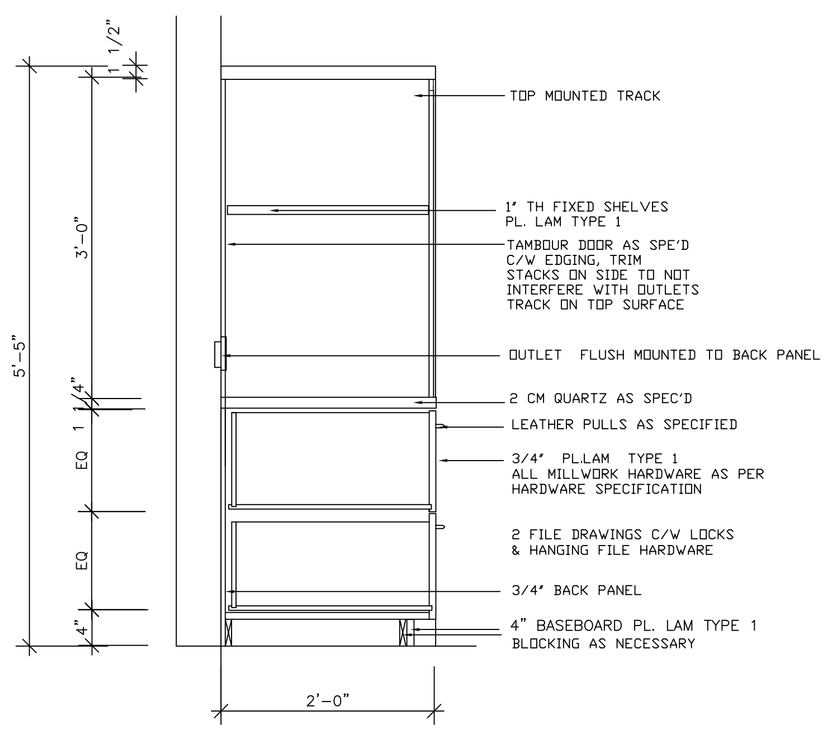

3 / ID4 SECTION - DOCKING STATION
SCALE 1" = 1'-0"

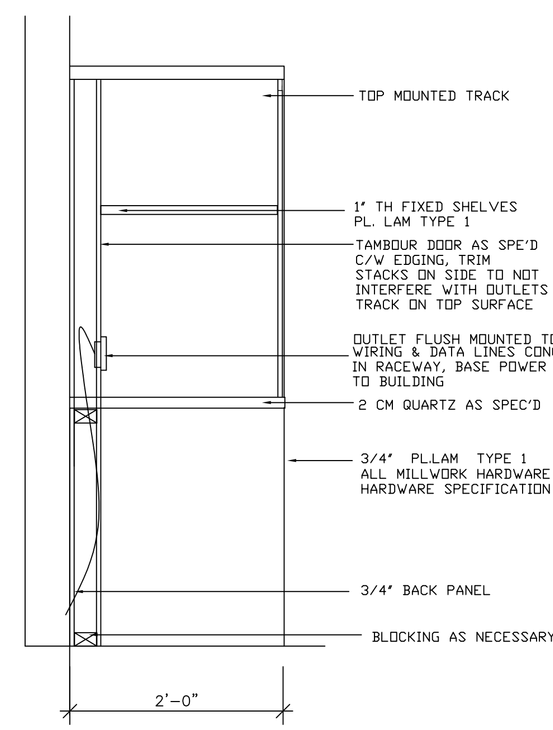

3 / ID4 SECTION - DOCKING STATION
SCALE 1" = 1'-0"

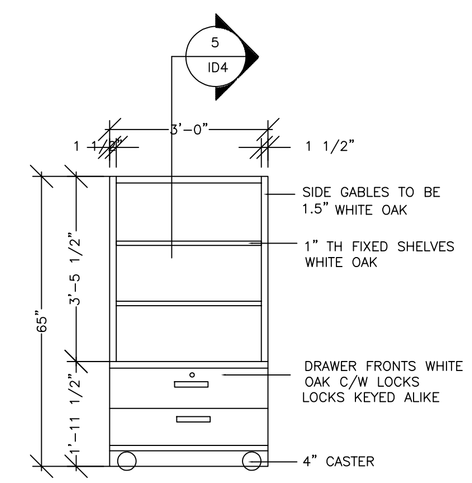

8 / A4 ELEVATION - MOBILE DISPLAY UNIT
SCALE 1/2" = 1'-0"

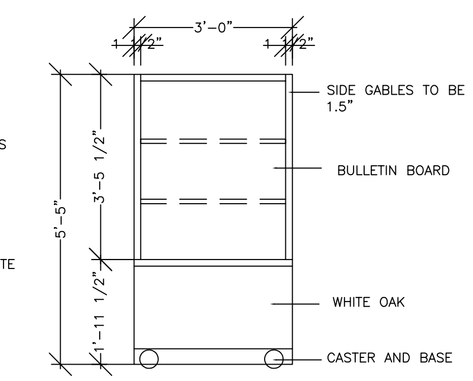

ELEVATION - MOBILE DISPLAY UNIT
SCALE 1/2" = 1'-0"

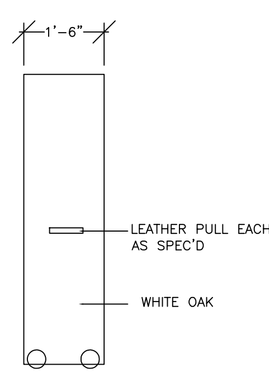

ELEVATION - MOBILE DISPLAY UNIT
SCALE 1/2" = 1'-0"

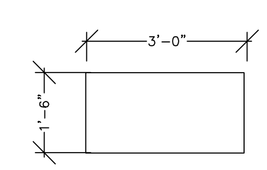

PLAN- MOBILE DISPLAY UNIT
SCALE 1/2" = 1'-0"

MILLWORK NOTES

1. STANDARDS
   AWMAC PREMIUM GRADE MILL STANDARD LATEST EDITION
2. CONSTRUCTION

3. SHOP DRAWINGS
   SHOP DRAWINGS TO BE DONE AND SENT TO DESIGNER FOR APPROVAL PRIOR TO CONSTUCTION.
   SYNERGY WILL PROVIDE AUTOCAD DRAWINGS FOR SHOP IF REQUIRED

4. CASTER HAFELE TWIN WHEEL CASTER 4" DIA WITH BRAKES
   MODEL: 660.58.341 220 LB CAPACITY
   BLACK
5. MOBILE UNITS ONLY PULLS RICHELIEU
   MODEL: 745366160195 90
   COLOR: BLACK 195 LEATHER
   SIZE: 31MM W, 188MML,

   WASTE & RECYCLING BINS HAFELE
   BINS 2 ONLY WITH LIDS
   502.72.761
   SIZES WIDTH 10.31"262MM, DEPTH 18.779" 477 HEIGHT AT FRONT
   15.78" 401, AT BACK 17"433 (PAGE 3 / 25)

   HAFELE
   FRAMES FOR VS SUB SIDE CABINET (NEXT TO WASTE & RECYCLING)
   MODEL: 546.82.900, & 2 BASKETS 546.36.242
   SIZES WIDTH 8.5" DEPTH 19.5" HEIGHT 19.25"
   FINISH: RAL 9006 GREY

   HAFELE
   CABINET PULLS & FREEZER 8" LONG
   MODEL: 155.00.
   FINISH STAINLESS STEEL LOOK 100ST50

   HAFELE
   FRIDGE PULLS 18" LONG
   MODEL: 101.20.725
   FINISH STAINLESS STEEL LOOK 100ST50

   ALL DRAWERS FOR KITCHEN AREA ONLY TO BE BLUM TANDEMBOX PLUS BLUMOTION AS SPEC'D

BLUM DRAWER INSERTS

BLUM AMBIA-LINE
TOP DRAWER ONLY
1 ONLY ZC7S450BS3
1 ONLY ZC7S100AS3
1 ONLY ZC7S550RS1

RICHELIEU
UNDER COUNTER LIGHTS
MODEL: 153122100
SMALLY PUCK LIGHT 12V
WARM WHITE TEMPERATURE 3,000K
TRIM STEEL TO MATCH LAMINATE

RICHELIEU
OFF SET LEG BRACE
MODEL: 972FB7518BC
BLACK
SIZE: 7 $\frac{1}{2}$", 1 $\frac{1}{2}$", 1 $\frac{1}{2}$"

REHAU
TAMBOUR HORIZONTAL DOOR
CLASSIC RECESSED INTERNALLY MOUNTING TOP TRACK
RUNS INTO SIDE OF CABINET ONLY DUE TO ELECTRICAL
ACOUSTICAL LINE, ALUMINUM FINISH
SIZE: 47 $\frac{1}{4}$" W, 36"H

ALL DRAWERS TO LOCK AND KEYED ALIKE WITH 5 KEYS TURNED OVER TO CONTRACT ADMINISTRATOR.
HAFELE CENTRAL LOCKING SYSTEM SYMO ROTARY LOCK OR EQUAL, NICKEL FINISH

Details on power module
Bryne's Custom power module BE02511-3-Z08-72
Worksurface/top Power Module with cutout
Byrne BE02511-E2X-3-3-Z08-72 modified
POWERFATACENTER ELLORA E2X
Outlets with 72" power cord: (3) Op
ON BACK OF DOCKING STATION

MILLWORK MATERIAL LIST

BULLETIN BOARD FORBO
$\frac{1}{4}$" THICK, JUTE BACKING
COLOR 2202

PLASTIC LAMINATE TYPE 1
FORMICA COLOR COLOR CORE 2
912C-58 STORM, MATT FINISH

NO.	DATE	DESCRIPTION	BY

DRAWN BY
PRINTING DATE

Drawings and specifications, as instruments of service are the property of the designer, the copyright in the same being reserved to them. No reproduction may be made without the permission of the designer, and All prints to be returned.
The contractor is to verify dimensions and data noted herein with conditions on the site and is held responsible for reporting any discrepancy to the designer for adjustment.

I.D.
SYNERGY INTERIOR DESIGN INC
13 Rosewarne. Avenue WINNIPEG, MB Canada R2M 0V8
204 233 9159
malvine@synergyinteriors.com
http://synergyinteriors.com

DATE OCT 2020 SCALE1/4" = 1'-0" REVISIONS
DRAWN BY M.G. CHECKED BYM.G.

MILLENNIUM LIBRARY , MAIN FLOOR
COMMUNITY CONNECTION
251 DONALD ST. WINNIPEG
AUTOCAD NUMBER DWG. ID-4