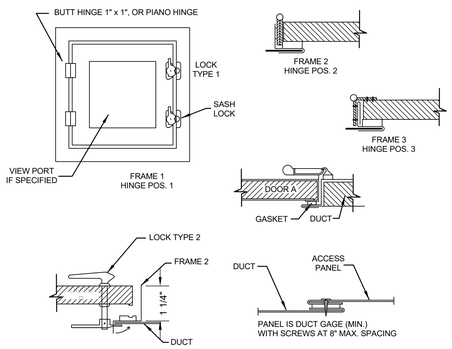

	DOOR SIZE	NO. HINGES	NO. LOCKS	METAL GAGE		
				FRAME	DOOR	BACK
2" W.G. STATIC AND LESS	12" x 12" 16" x 20" 24" x 24"	2 2 3	1-S 2-S 2-S	24 22 22	26 24 22	26 26 26
3" W.G. STATIC	12" x 12" 16" x 20" 24" x 24"	2 2 3	1-S 1-S,1-T,1-B 2-S,1-T,1-B	22 20 20	22 20 20	26 26 24
4" W.G. TO 10" W.G.	12" x 12" 16" x 20" 24" x 24"	2 3 3	1-S,1-T,1-B 2-S,1-T,1-B 2-S,2-T,2-B	20 18 18	20 18 18	26 24 24
S = SIDE OPPOSITE HINGES, T = TOP, B = BOTTOM						

DUCT ACCESS DOOR DETAIL

SCALE: N.T.S.

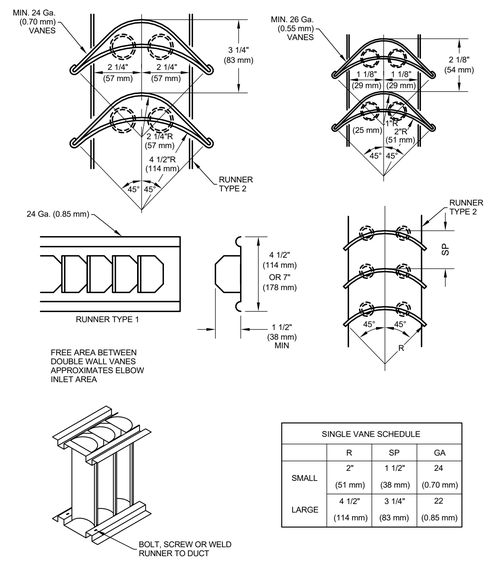

SINGLE VANE SCHEDULE			
	R	SP	GA
SMALL	2" (51 mm)	1 1/2" (38 mm)	24 (0.70 mm)
LARGE	4 1/2" (114 mm)	3 1/4" (83 mm)	22 (0.85 mm)

DUCT VANES AND VANE RUNNERS DETAIL

SCALE: N.T.S.

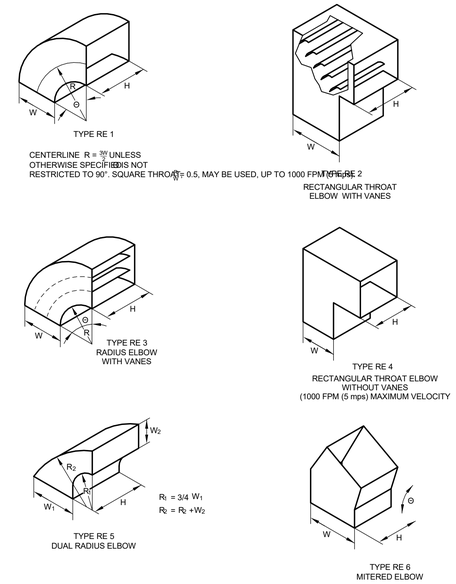

DUCT RECTANGULAR ELBOW DETAILS

SCALE: N.T.S.

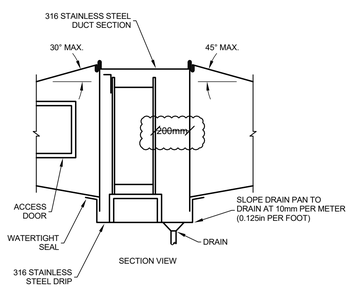

DIRECT EXPANSION COOLING COIL INSTALLATION DETAIL

SCALE: N.T.S.

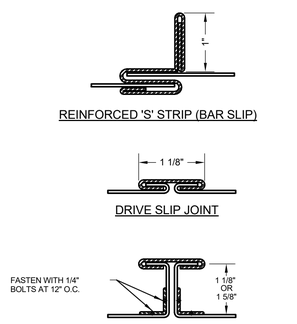

LOW PRESSURE DUCT

MAX. SIDE "	GAUGE	MAX. LENGTH	TRANSVERSE JOINT	BRACING ANGLE
UP TO 12"	26	94"	REINF. 'S' & DRIVE SLIP	NONE
13" TO 24"	24	94"	REINF. 'S' & DRIVE SLIP	NONE
25" TO 30"	24	45"	1 1/8" 'T'	NONE
31" TO 40"	22	45"	1 1/8" 'T'	NONE
41" TO 60"	22	44"	1 5/8" 'T'	NONE
61" TO 90"	20	44"	1 5/8" 'T'	1 1/2" x 1 1/2" x 1/8"
91" & WIDER	18	44"	1 5/8" 'T'	1 1/2" x 1 1/2" x 1/8"

- BRACING ANGLE IRON BETWEEN JOINTS

LOW PRESSURE DUCT GAUGE SCHEDULE

SCALE: N.T.S.

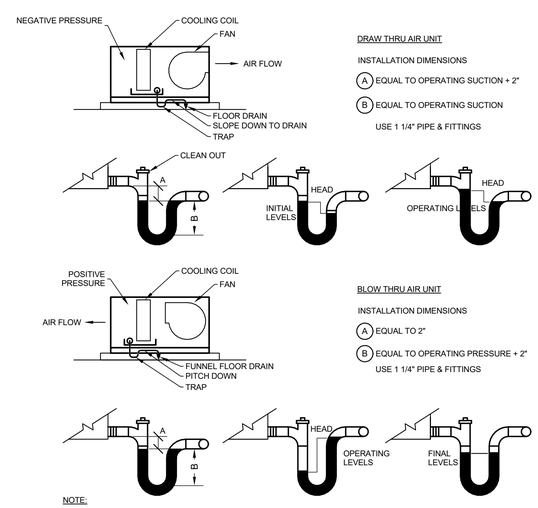

NOTE:

A TRAP IS REQUIRED TO HOLD A HEAD OF WATER WHICH EQUALS THE PRESSURE DIFFERENCE THAT EXISTS BETWEEN THE INSIDE OF THE AIR UNIT AND THE ATMOSPHERE ON THE OUTSIDE OF THE UNIT. WHEN THE UNIT RUNS THE DIFFERENTIAL PRESSURE CAUSES THE WATER IN THE TRAP TO MOVE VERTICALLY. THIS PRODUCES A WATER COLUMN OF SUFFICIENT HEIGHT TO BALANCE THE PRESSURE DIFFERENCE. ONCE THE WATER COLUMN IS ESTABLISHED, ADDITIONAL CONDENSATE SIMPLY FILLS AND OVERFLOWS THE TRAP ON ITS WAY TO THE DRAIN.

DEEP SEAL TRAP DETAIL

SCALE: N.T.S

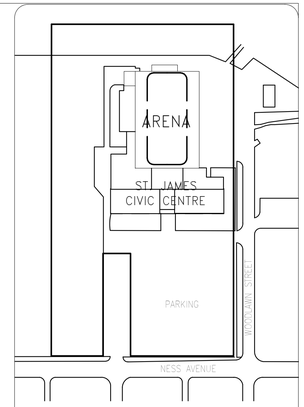

The General Contractor shall check & verify all dimensions andreport any errors or omissions to the designers.

0	2020-10-30	ISSUED FOR CONSTRUCTION	

APEGM
Certificate of Authorization
Epp Siepman Engineering Inc.
No. 4035

PROVINCE OF MANITOBA
S.C. ELLENBERG
Member
31336
2020-10-29
REGISTERED PROFESSIONAL ENGINEER

Consultant

epp siepman engineering
400 - 136 Market Avenue
Winnipeg, MB R3B 0P4
T 204 453 1080

300-275 Carlton Street
Winnipeg, Manitoba R3C 5R6
T 204. 943. 7501
F 204. 943. 7507

Crosier Kilgour & Partners Ltd.
CONSULTING STRUCTURAL ENGINEERS

Project
SJCC RINK CRAWLSPACE
ARENA CRAWLSPACE RESTORATION
2055 NESS AVENUE
WINNIPEG, MANITOBA

Sheet Title
MECHANICAL DETAILS

File	Date
20057	2020-09-17
Design: Designer	Drawn: Author
Revision	Sheet No. M4.1