A1 SIZE - 594mm x 841mm

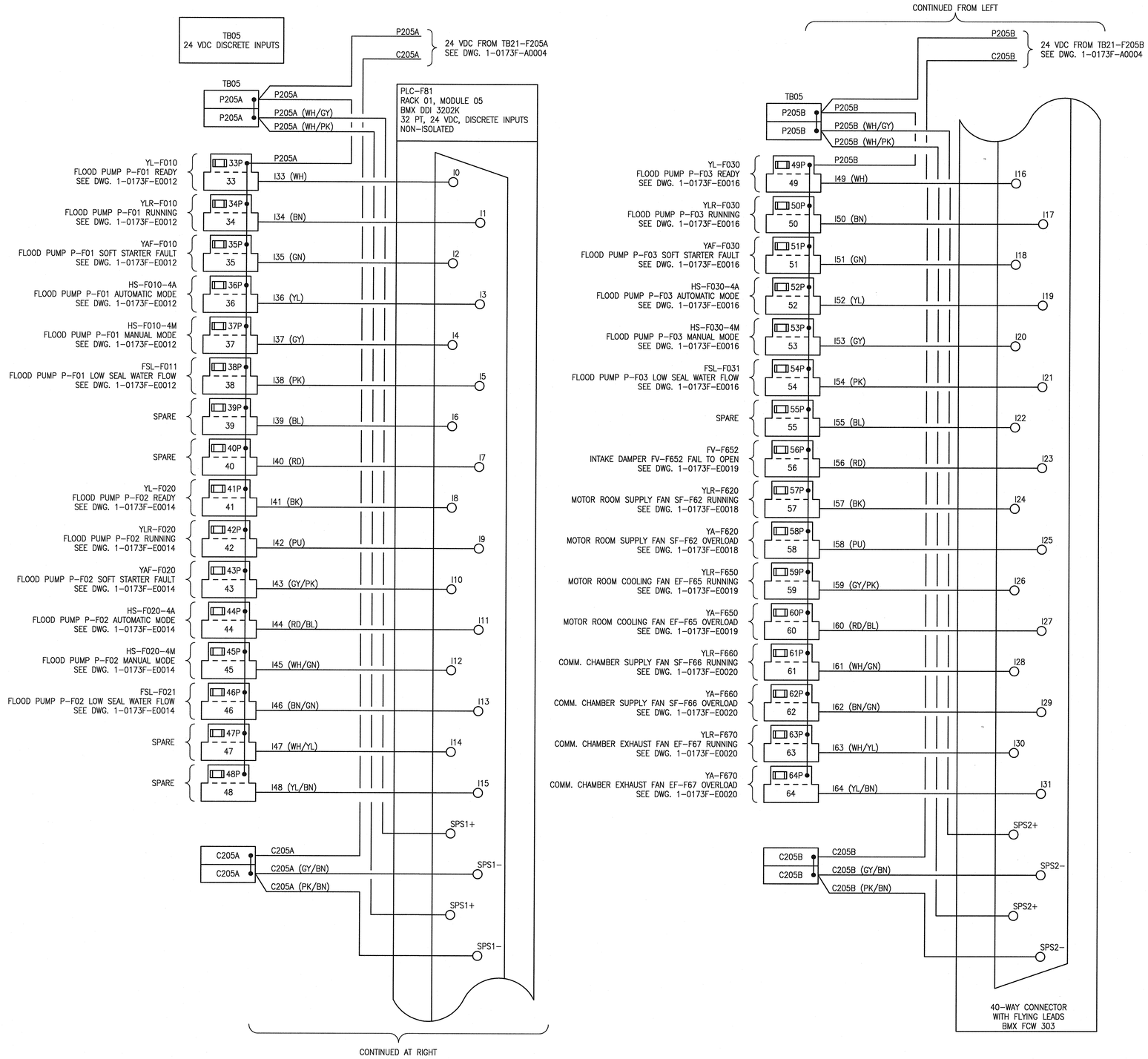

FUSE SCHEDULE

TB	IDENTIFIER	SIZE	RATED CURRENT (A) FA
TB05	33P	5x20mm	0.1
	34P	5x20mm	0.1
	35P	5x20mm	0.1
	36P	5x20mm	0.1
	37P	5x20mm	0.1
	38P	5x20mm	0.1
	39P	5x20mm	0.1
	40P	5x20mm	0.1
	41P	5x20mm	0.1
	42P	5x20mm	0.1
	43P	5x20mm	0.1
	44P	5x20mm	0.1
	45P	5x20mm	0.1
	46P	5x20mm	0.1
	47P	5x20mm	0.1
	48P	5x20mm	0.1
	49P	5x20mm	0.1
	50P	5x20mm	0.1
	51P	5x20mm	0.1
	52P	5x20mm	0.1
	53P	5x20mm	0.1
	54P	5x20mm	0.1
	55P	5x20mm	0.1
	56P	5x20mm	0.1
	57P	5x20mm	0.1
	58P	5x20mm	0.1
	59P	5x20mm	0.1
	60P	5x20mm	0.1
	61P	5x20mm	0.1
	62P	5x20mm	0.1
	63P	5x20mm	0.1
	64P	5x20mm	0.1

DRAWING NUMBER	REFERENCE DRAWINGS
1-0173F-A0004	POWER DISTRIBUTION SCHEMATIC CONTROL PANEL CP-F81
1-0173F-A0002	PANEL LAYOUT & BILL OF MATERIALS CONTROL PANEL CP-F81

APEGM Certificate of Authorization
SNC-Lavalin Inc.
No. 4489

NO.	REVISIONS	DATE	DESIGN	CHECK
00	ISSUED FOR CONSTRUCTION	2020/08/19	KS	BC

SNC·LAVALIN
SNC-LAVALIN INC.
148 Nature Park Way
Winnipeg, MB, Canada R3P 0X7
204-786-8080

DESIGNED BY: K. SAPIAK	CHECKED BY: B. CLEVEN
DRAWN BY: N. ESCHUK	APPROVED BY: B. CLEVEN
SCALE: N.T.S.	ISSUED FOR CONSTRUCTION BY: K. ZUREK
DATE: 2020/03/30	DATE: 2020/08/19
CONSULTANT NO.:	

ENGINEER'S SEAL
PROVINCE OF MANITOBA
2020-08-19
K. K. SAPIAK
Member 33675
REGISTERED PROFESSIONAL ENGINEER
Rev.00

Winnipeg
THE CITY OF WINNIPEG
WATER AND WASTE DEPARTMENT

POLSON FLOOD PUMPING STATION
2020 UPGRADES
PLC I/O WIRING DIAGRAM
CONTROL PANEL CP-F81
DISCRETE INPUTS RACK 01, MODULE 05

CITY DRAWING NUMBER	SHEET	REV.	SIZE
1-0173F-A0006	001	00	A1

1-0173F-A0006-001.dwg

LAST SAVE: 2020/08/19 - 2:58pm
PATH: M:\672795\4ENG\48IC\DD - General DWG\1-0173F-A0006-001.dwg