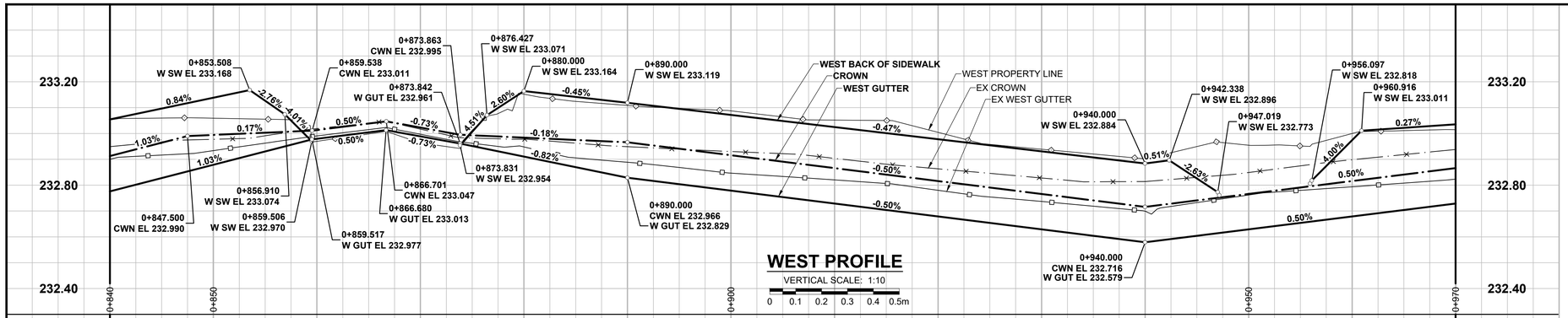

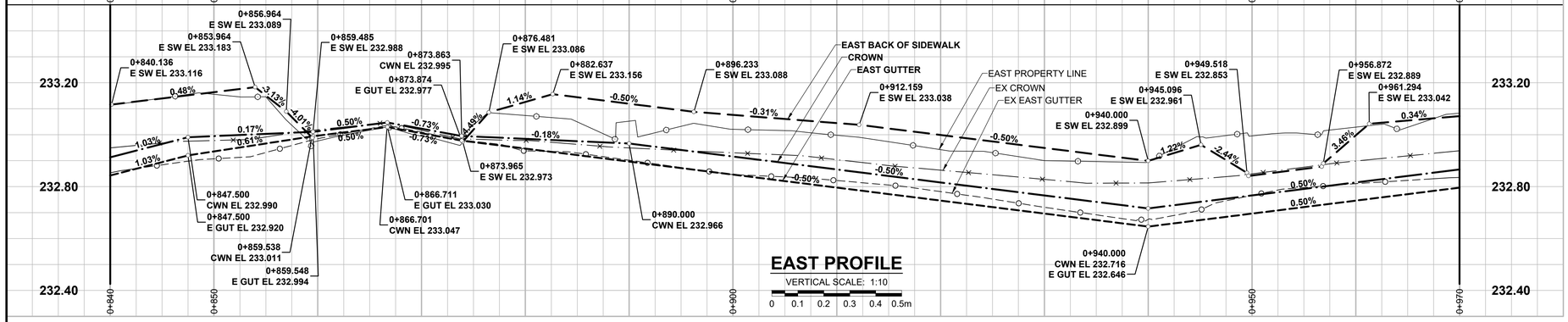

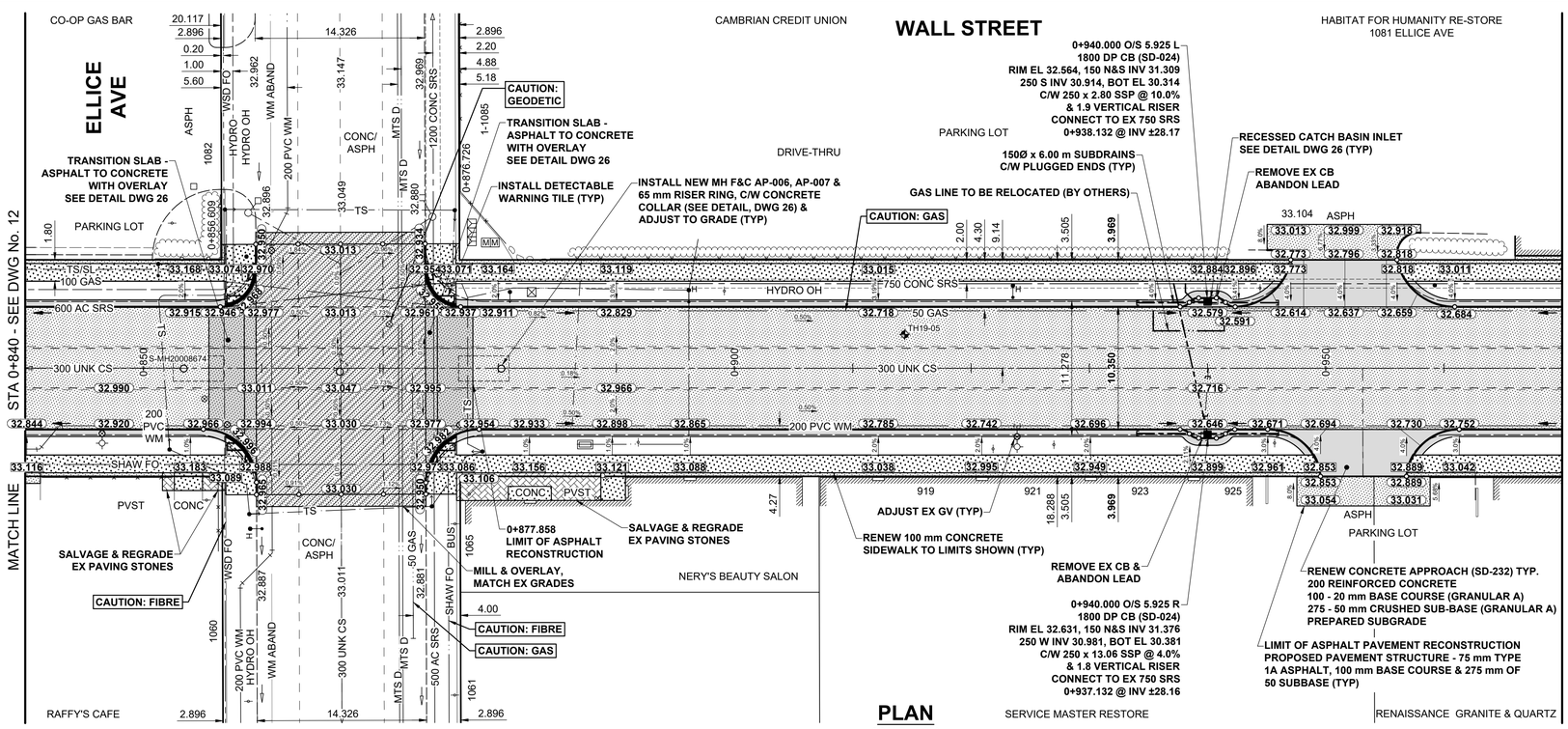

PLAN

SCALE: 1:250

0 5 10 15m

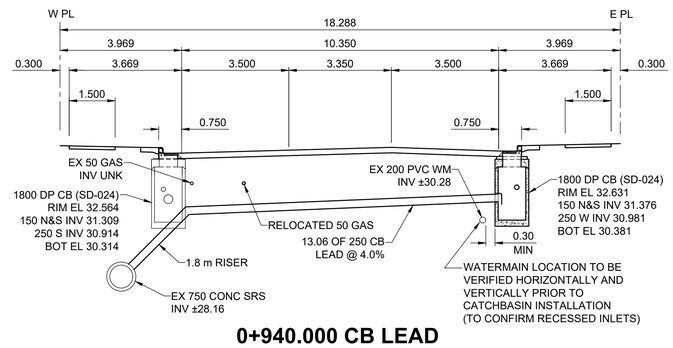

0+940.000 CB LEAD CONNECTION TO 750 CONC SRS

SCALE: 1:100

0 2.5 5.0m

NOTES

1. ADJUST MH AND CB RIMS TO NEW GRADES.
2. LAMP STANDARDS, HYDRO POLES, AND ANCHORS THAT REQUIRE TEMPORARY SUPPORT AND BACKFILL TO BE DONE SO AT THE EXPENSE OF THE CONTRACTOR AS NECESSARY.
3. CONTRACTOR TO REGRADE/RENEW EXISTING PRIVATE SIDEWALKS TO LIMITS AS SHOWN. SIDEWALKS TO BE RENEWED WITH CONCRETE UNLESS NOTED OTHERWISE.
4. CONTRACTOR TO TAKE PRECAUTIONARY STEPS TO PROTECT EXISTING TREES WITHIN THE LIMITS OF CONSTRUCTION FROM DAMAGE FROM CONSTRUCTION ACTIVITIES AS OUTLINED IN THE SPECIFICATIONS.
5. CONTRACTOR TO CONFIRM THE LOCATION OF ALL UTILITIES/SERVICES IN THE FIELD PRIOR TO CONSTRUCTION.
6. CB SD-023 & SD-024 OFFSETS ARE DIMENSIONED TO BOC. CB SD-025 OFFSETS ARE DIMENSIONED O/C. TF-100 OFFSETS ARE DIMENSIONED TO FACE OF CURB.
7. IN GENERAL, PAVEMENT AND SIDEWALK AREAS TO BE REMOVED, MATCH RECONSTRUCTION LIMITS.
8. REFER TO TENDER FOR DETAILS REGARDING TRAFFIC MANAGEMENT.
9. EXISTING LONG WATER SERVICES TO BE INSULATED (SD-018). REFER TO TENDER FOR FURTHER REQUIREMENTS AND AS NOTED IN PLAN.
10. ALL COSTS, MATERIALS AND LABOR ASSOCIATED WITH THE RESTORATION OF THE CATHODIC PROTECTED WATERMAIN WILL BE RESPONSIBILITY OF THE CONTRACTOR.
11. MATCH EXISTING GRADES AT DOOR SILLS.
12. ADJUST EXISTING WATER VALVES AND WATER SERVICE CURB STOPS TO GRADE.
13. WATERMAIN LOCATION TO BE VERIFIED HORIZONTALLY AND VERTICALLY PRIOR TO CATCHBASIN INSTALLATION (TO CONFIRM RECESSED INLETS).
14. ADD 200.000 m TO ABBREVIATED ELEVATIONS TO OBTAIN GEODETIC ELEVATION.

ENGINEERS GEOSCIENTISTS MANITOBA
Certificate of Authorization
MORRISON HERSHFIELD
No. 1736

TENDER No. 538-2020

METRIC

WHOLE NUMBERS INDICATE MILLIMETRES
DECIMALIZED NUMBERS INDICATE METRES

EXISTING	LEGEND - PLAN	NEW	EXISTING	LEGEND - PLAN	NEW	EXISTING	LEGEND - PLAN	NEW
	GAS			MANHOLE			CONCRETE PAVEMENT	
	MTS HANDWELL/PEDESTAL			CATCH BASIN/CATCH PIT			CONC SIDEWALK/MEDIAN	
	HYDRO HANDWELL/CABINET			CURB INLET WITH BOX			ASPHALT PAVEMENT	
	CATV/FIBRE OPTIC			TREE			PAVING STONE	
	TRAFFIC SIGNALS/PIT		TH-12	TEST HOLE			GRAVEL	
	LAND DRAINAGE SEWER			PROPERTY LINE			RAMP CURB	
	SANITARY/COMBINED SEWER			SURVEY BAR			PLANING/REMOVAL	
	CB LEAD/SSP/DCP			FENCE				
	WATERMAIN			BOC/EDGE OF PAVEMENT				
	SUBDRAIN		33.000	ELEVATION	33.333			
	DITCH			TRAFFIC SIGN				

LOCATION APPROVED
UNDERGROUND STRUCTURES

SUPR. U/G STRUCTURES COMMITTEE DATE

NOTE:
LOCATION OF UNDERGROUND STRUCTURES AS SHOWN ARE BASED ON THE BEST INFORMATION AVAILABLE BUT NO GUARANTEE IS GIVEN THAT ALL EXISTING UTILITIES ARE SHOWN OR THAT THE GIVEN LOCATIONS ARE EXACT. CONFIRMATION OF EXISTENCE AND EXACT LOCATION OF ALL SERVICES MUST BE OBTAINED FROM THE INDIVIDUAL UTILITIES BEFORE PROCEEDING WITH CONSTRUCTION.

BM 37-59
ELEV 233.277 m
NE Cor. Erin St. & Richard Ave., Tblt. in W. Conc. foundation No. 1525 Erin St., 1 m N. & 0.7 m below brick of S.W. Cor. of Bldg.

No.	REVISIONS	YY/MM/DD	BY
B	ISSUED FOR TENDER	20/11/16	RPB
A	ISSUED FOR CLIENT REVIEW	20/08/05	RPB

MORRISON HERSHFIELD

DESIGNED BY	WRJ	CHECKED BY	RPB
DRAWN BY	DML	APPROVED BY	BWB
HOR SCALE	1:250	RELEASED FOR CONSTRUCTION	
VERT SCALE	1:10		
DATE	20/08/05	DATE	

PROFESSIONAL'S SEAL

PRELIMINARY DRAWING

NOT TO BE USED FOR CONSTRUCTION

CONSULTANT FILE NAME
1903792-Wall-PP-04.dwg

Winnipeg

THE CITY OF WINNIPEG
PUBLIC WORKS DEPARTMENT
ENGINEERING DIVISION

2021-2022 REGIONAL STREET RENEWAL PROGRAM
WALL STREET RECONSTRUCTION
ST MATTHEWS AVE TO NOTRE DAME AVE

WALL STREET
PAVING AND GRADING
STA 0+840 TO STA 0+970

CITY DRAWING NUMBER P-3530-13
SHEET 13 OF 26
DRAWING NUMBER 13

ISO A1 - 594mm x 841mm
P:\2019\1903792000-2019-2023 Erin-Wall-Sargent Street\09_CAD\07 Sheets\Wall Street\1903792-Wall-PP-04.dwg Last Saved: 11/5/2020 1:16 PM by DLame Plotted: 11/17/2020 9:55 AM by Dave Lane