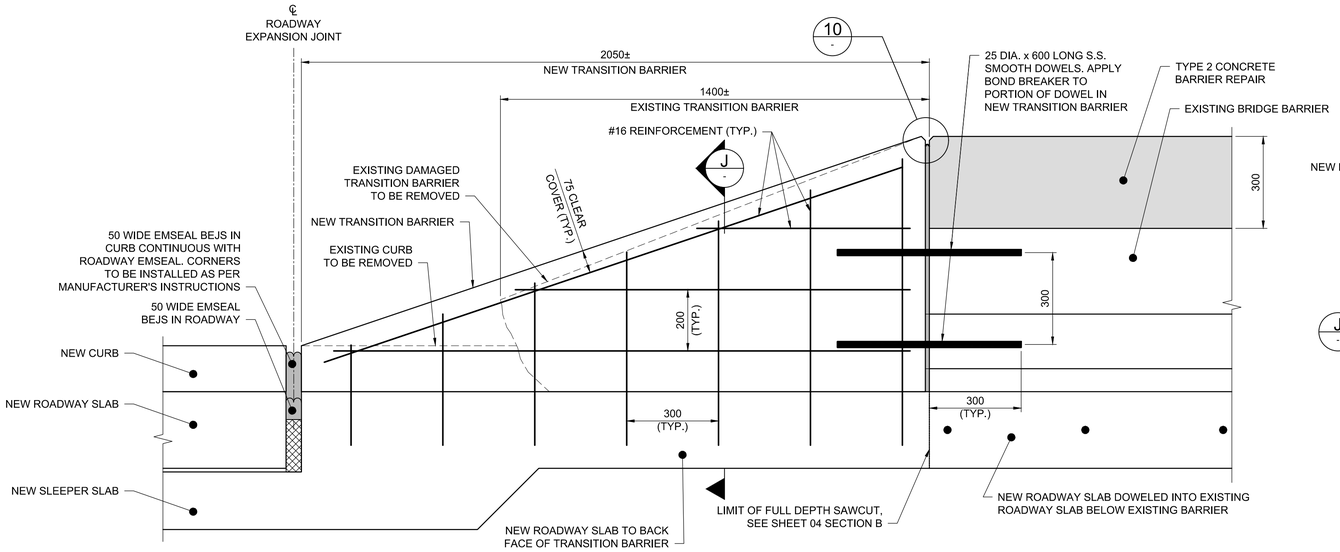

F 04 TRANSITION BARRIER REPLACEMENT
1:10

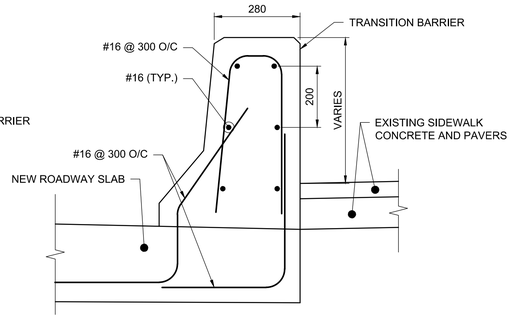

J - TRANSITION BARRIER REINFORCING
1:10

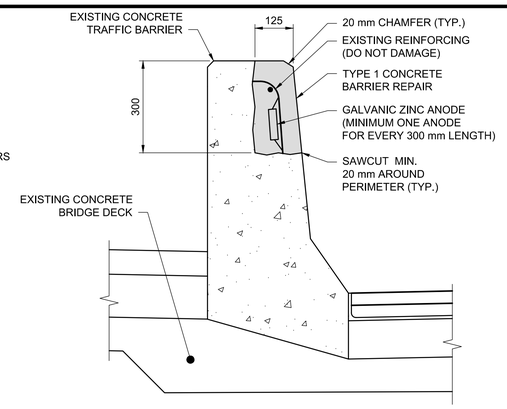

7 - BARRIER REPAIR - TYPE 1
1:10

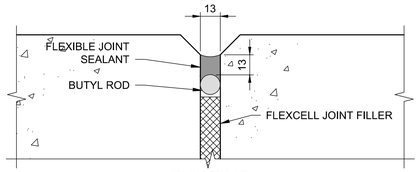

EXISTING

NOTE: CONTRACTOR TO CONFIRM SIZE OF GAP PRIOR TO REMOVING EXISTING MATERIAL

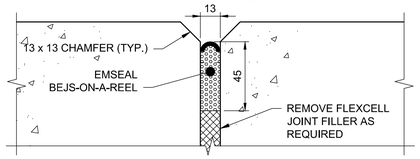

PROPOSED

10 - DETAIL - BARRIER JOINT REPAIR
1:2

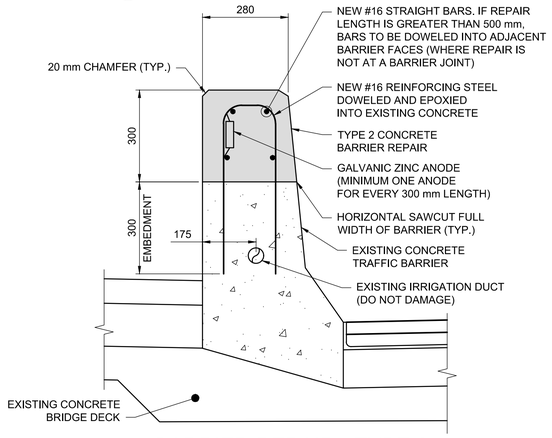

8 - BARRIER REPAIR - TYPE 2
1:10

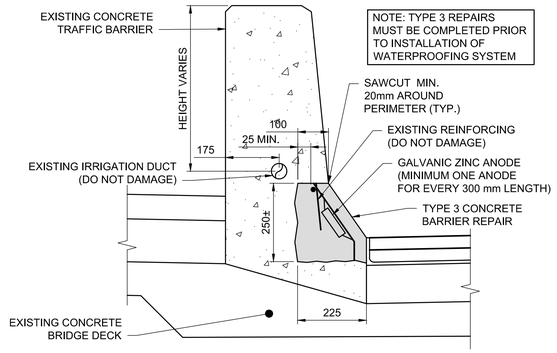

9 - BARRIER REPAIR - TYPE 3
1:10

TABLE 2: BARRIER REPAIRS

REPAIR TYPE	NUMBER OF REPAIRS	MAXIMUM LENGTH OF SINGLE REPAIR (m)	TOTAL LINEAR LENGTH (m)	ASSUMED NUMBER OF ANODES REQUIRED
TYPE 1 (PARTIAL DEPTH)	13	1.2	7.5	28
TYPE 2 (FULL DEPTH)	3	8.0	8.6	29
TYPE 3 (BOTTOM)	3	0.5	1.2	6

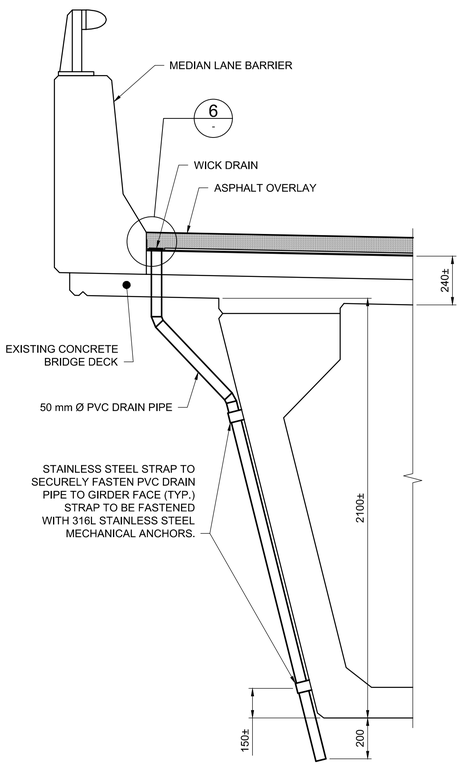

G 03 SECTION - WICK DRAIN DRAINAGE PIPE
1:15
TYPICAL AT SOUTHWEST AND NORTHWEST CORNERS OF BRIDGE DECK

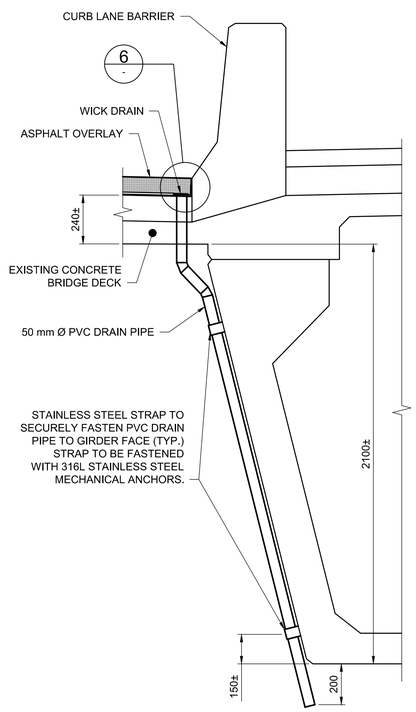

H 03 SECTION - WICK DRAIN DRAINAGE PIPE
1:15
TYPICAL AT SOUTHEAST AND NORTHEAST CORNERS OF BRIDGE DECK

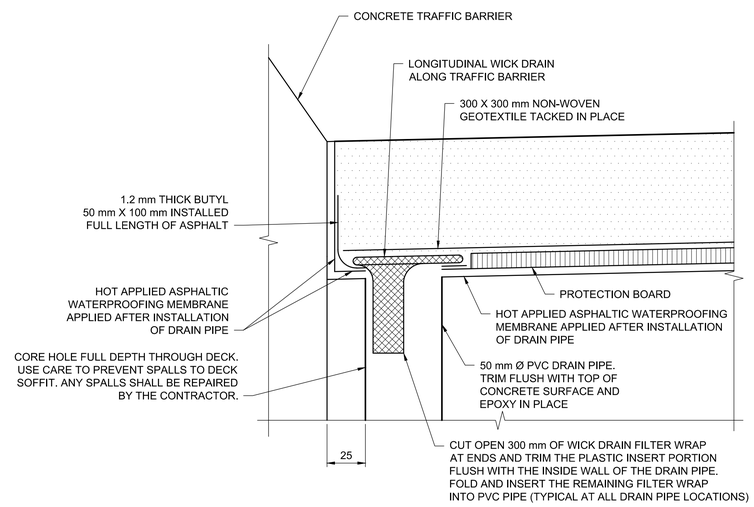

6 - DETAIL - PVC DRAIN PIPE
1:2

WICK DRAIN CONSTRUCTION NOTES:
1. DIMENSIONS FOR CORING OF DRAIN PIPE ARE ESTIMATED BASED ON ORIGINAL BRIDGE DESIGN RECORD DRAWINGS.
2. CONTRACTOR SHALL VERIFY ALL FIELD DIMENSIONS PRIOR TO BEGINNING WORK. ANY VARIATION SHALL BE BROUGHT TO THE ATTENTION OF THE CONTRACT ADMINISTRATOR.

METRIC

WHOLE NUMBERS INDICATE MILLIMETRES
DECIMALIZED NUMBERS INDICATE METRES

APEGM
Certificate of Authorization
Dillon Consulting Limited (MB)
No. 1789 Date: 2020/04/30

B.M. N 5527510.548 E 634165.718
ELEV. ELEV. 230.502

NO.	REVISIONS	DATE	BY
0	ISSUED FOR TENDER	20/04/30	DRA

DESIGNED BY	DRA
DRAWN BY	MDG
CHECKED BY	MBL
APPROVED BY	DRA
HOR. SCALE	—
VERTICAL	—
DATE	--

DILLON CONSULTING

RELEASED FOR CONSTRUCTION
DATE

ENGINEER'S SEAL
PROVINCE OF MANITOBA
ORIGINAL STAMPED BY
D.R.C. AMORIM
2020/04/30
Member
33215
REGISTERED PROFESSIONAL ENGINEER

CONSULTANT PROJECT NUMBER
20-2342

Winnipeg
THE CITY OF WINNIPEG
PUBLIC WORKS DEPARTMENT

2020 BRIDGE MAINTENANCE
MAIN STREET NORTHBOUND
BRIDGE DECK REPAIRS

STRUCTURAL DETAILS 3 OF 3

CITY DRAWING NUMBER
B104-20-06
SHEET 06 OF 11
CONSULTANT DRAWING NUMBER