A1 SIZE – 594mm x 841mm

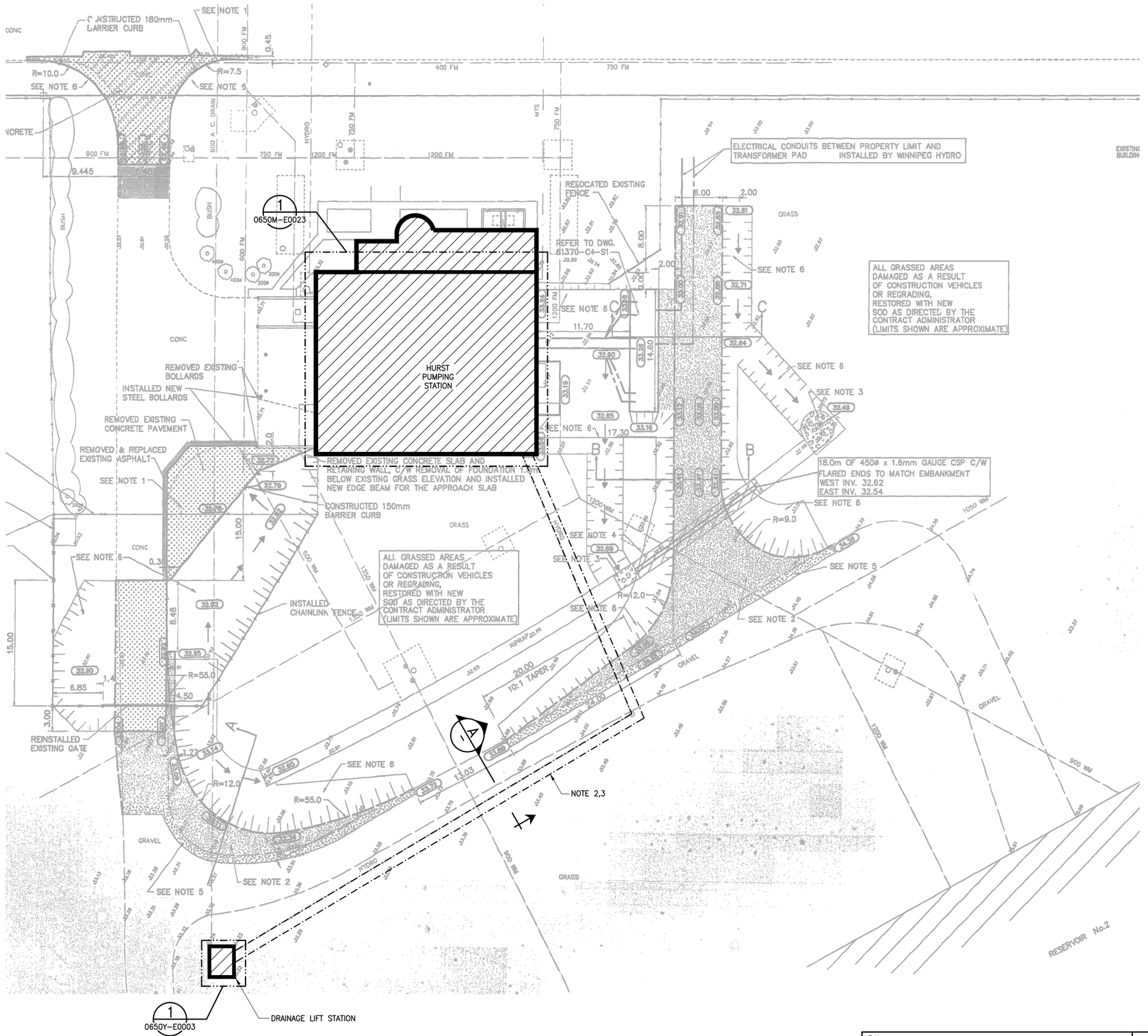

NOTES:

1. REFER TO ORIGINAL DRAWING "HURST 26" FOR DRAWING BACKGROUND INFORMATION.
2. FIELD VERIFY THE EXISTING ALIGNMENT OF THE UNDERGROUND FEED FROM THE MAIN PUMPING STATION TO THE DRAINAGE LIFT STATION. INSTALL A NEW CABLE TRENCH NEXT TO THE EXISTING DUCT BANK. ABANDON EXISTING CABLE IN EXISTING DUCT BANK.
3. THE NEW CABLE TRENCH SHALL CONTAIN THE REPLACEMENT FEED FOR THE DRAINAGE LIFT STATION AND A NEW COMMUNICATION CABLE. SEPARATE THE TWO CABLES AS INDICATED.
4. THE NEW COMMUNICATION CABLE TO BE BELDON 121872A CABLE OR APPROVED EQUAL IN ACCORDANCE WITH B7.

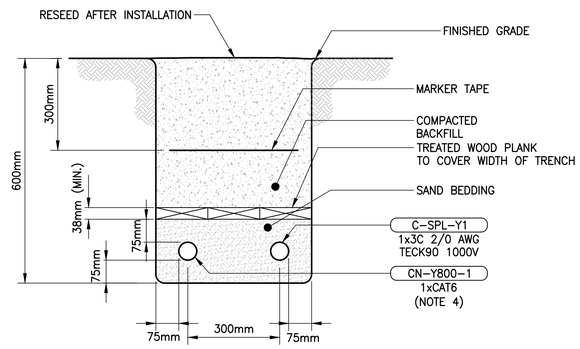

A — CABLE TRENCH DETAIL

SCALE: N.T.S.

NO.	DRAWING NUMBER	REFERENCE DRAWING TITLE
10	–	–
9	–	–
8	–	–
7	–	–
6	–	–
5	–	–
4	1–0650Y–E0003–001	ELECTRICAL – DRAINAGE LIFT STATION – POWER & INSTRUMENT PLAN AND DETAILS
3	1–0650M–E0023–001	ELECTRICAL – PUMP STATION MAIN AND PUMP LEVEL – POWER PLAN
2	1–0650A–E0002–001	AUTOMATION – NETWORK DIAGRAM
1	1–0650A–D0001–001	COVER SHEET

REFERENCE DRAWINGS

ENGINEERS GEOSCIENTISTS MANITOBA
Certificate of Authorization
KGS Group
No. 245

B.M. –
ELEV. –

NO.	REVISIONS	DATE	DESIGN	CHECK
0	ISSUED FOR CONSTRUCTION	2020/06/18	JJB	JB

KGS GROUP

DESIGNED BY: T. BECK	CHECKED BY: J. BOUCHARD
DRAWN BY: S. GUSE	APPROVED BY: J. BOUCHARD
SCALE: 1:250	ISSUED FOR CONSTRUCTION BY:
DATE: 2020–06–18	DATE:
CONSULTANT NO.: 19–0107–005_E12	

ENGINEER'S SEAL
PROVINCE OF MANITOBA
J. BOUCHARD
Member
20560
2020-06-18
REGISTERED PROFESSIONAL ENGINEER

Winnipeg
THE CITY OF WINNIPEG
WATER AND WASTE DEPARTMENT

HURST PUMPING STATION
STRUCTURAL REPAIRS AND DRAINAGE BUILDING UPGRADES
ELECTRICAL
PARTIAL SITE PLAN

CITY DRAWING NUMBER	SHEET	REV.	SIZE
1–0650A–E0003	001	0	A1