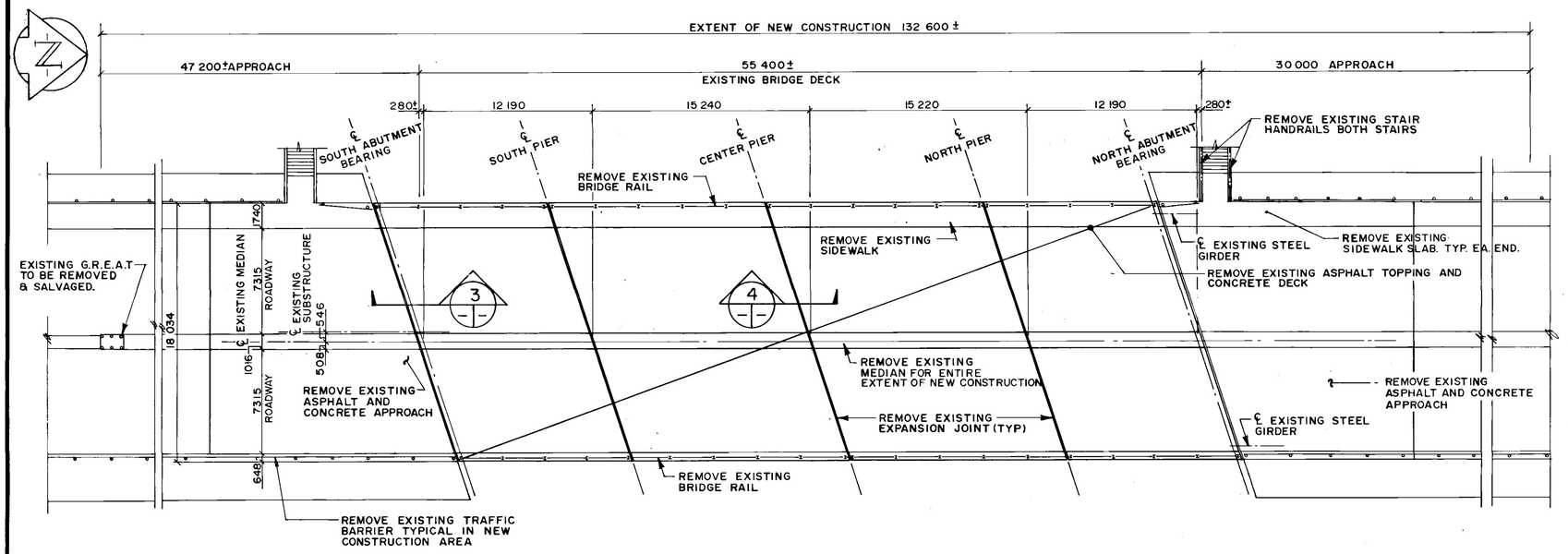

1 PLAN OF BRIDGE DECK
1 : 200

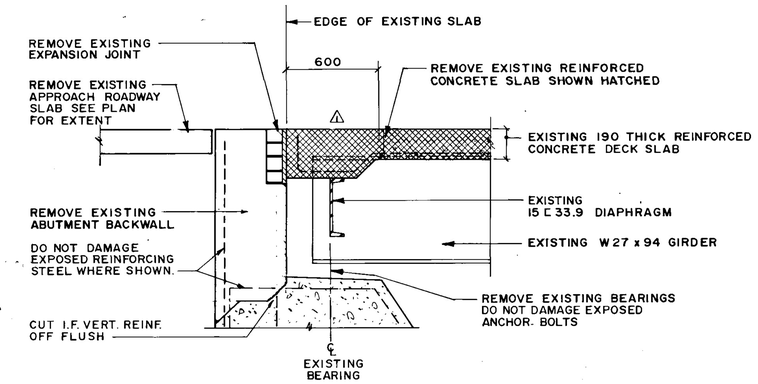

3 SECTION - EXISTING DIAPHRAGM AT ABUTMENT
1 : 20

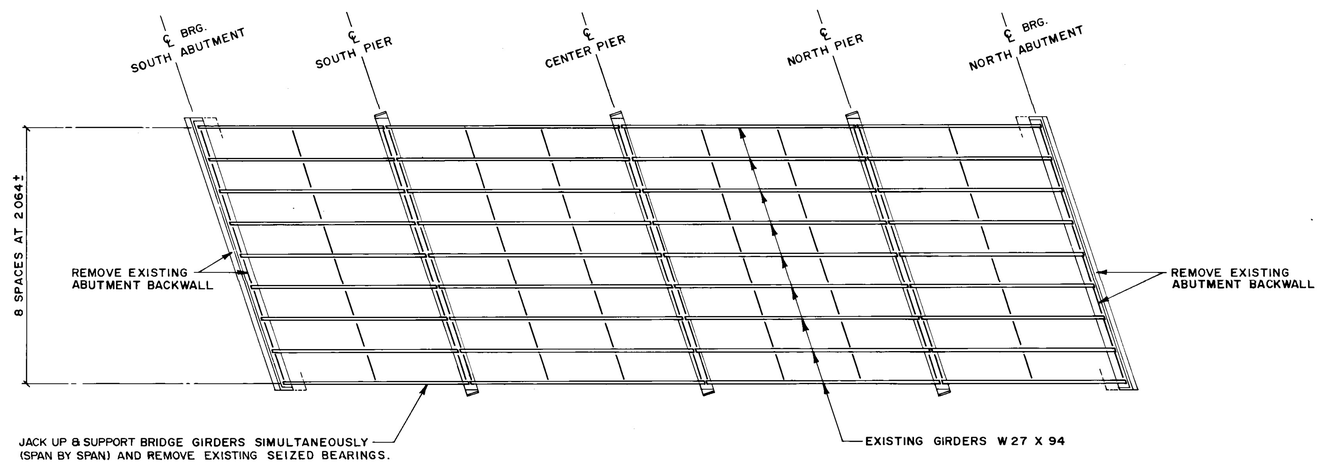

2 PLAN OF GIRDERS & SUBSTRUCTURE
1 : 200

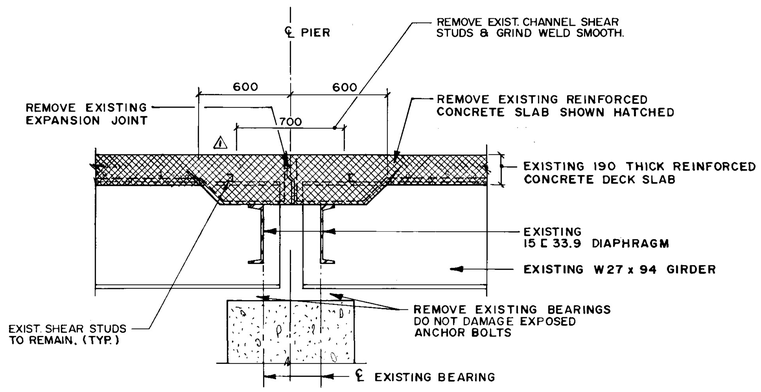

4 TYP. SECTION - EXISTING DIAPHRAGM AT PIERS
1 : 20

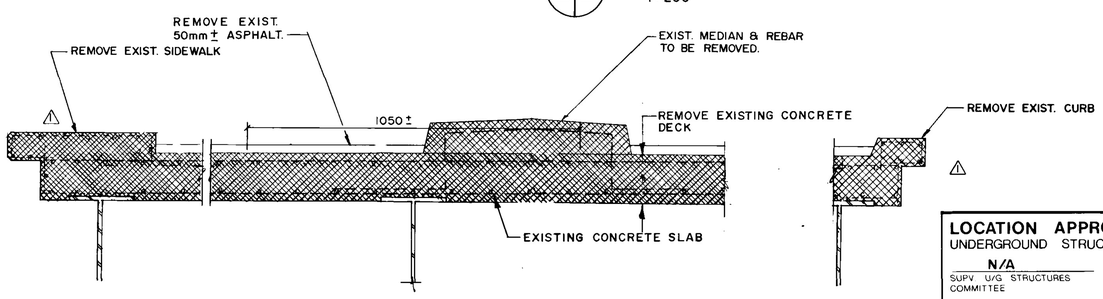

5 SECTION - SHOWING EXISTING DECK SLAB
NTS

B-5903-7

LOCATION APPROVED
UNDERGROUND STRUCTURES
N/A
SUPV. U/G STRUCTURES COMMITTEE — DATE

NOTE:
LOCATION OF UNDERGROUND STRUCTURES AS SHOWN ARE BASED ON THE BEST INFORMATION AVAILABLE BUT NO GUARANTEE IS GIVEN THAT ALL EXISTING UTILITIES ARE SHOWN OR THAT THE GIVEN LOCATIONS ARE EXACT. CONFIRMATION OF EXISTENCE AND EXACT LOCATION OF ALL SERVICES MUST BE OBTAINED FROM THE INDIVIDUAL UTILITIES BEFORE PROCEEDING WITH CONSTRUCTION.

AS-BUILT
DATE 91.02.26 BY
CHECKED BY

B.M.
ELEV.

NO	REVISIONS	DATE	BY
2	REVISED AS CONSTRUCTED	90-12-14	FPC
1	ADDENDUM	90-3-19	G.A.

WARDROP ENGINEERING INC.
WINNIPEG TORONTO THUNDER BAY EDMONTON

DESIGNED BY	JC & FPC	CHECKED BY	
DRAWN BY	LG	APPROVED BY	
HOR. SCALE / VERTICAL	AS NOTED	AUTHORIZED BY / DATE	90 12 23 W. NAUMKO / STREETS & BRIDGES ENGINEER
DATE	JAN. 15, 1990	ACCEPTED BY / DATE	90 12 23 G.R. SMITH / BRIDGE ENGINEER

ENGINEER'S SEAL: PROVINCE OF MANITOBA — C. D. STEWART — 90/12/20 — REGISTERED ENGINEER

CONSULTANT DRAWING NO. 890007-02-00

THE CITY OF WINNIPEG
WORKS AND OPERATIONS DIVISION
STREETS AND TRANSPORTATION DEPARTMENT

EMPRESS STREET OVERPASS
STRUCTURE REHABILITATION, STRENGTHENING AND RELATED WORKS

PLANS SHOWING LIMITS OF DEMOLITION

CITY DRAWING NUMBER
B100-90-07(R1)