WO 101-84

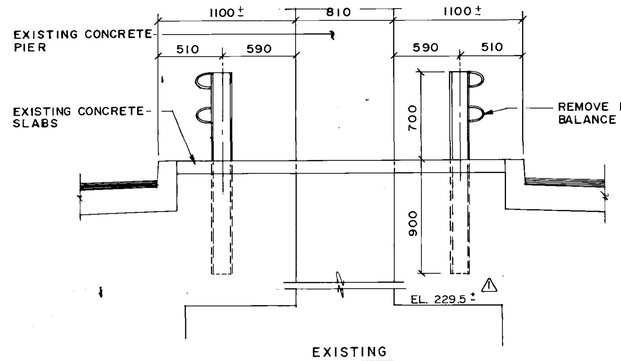

EXISTING

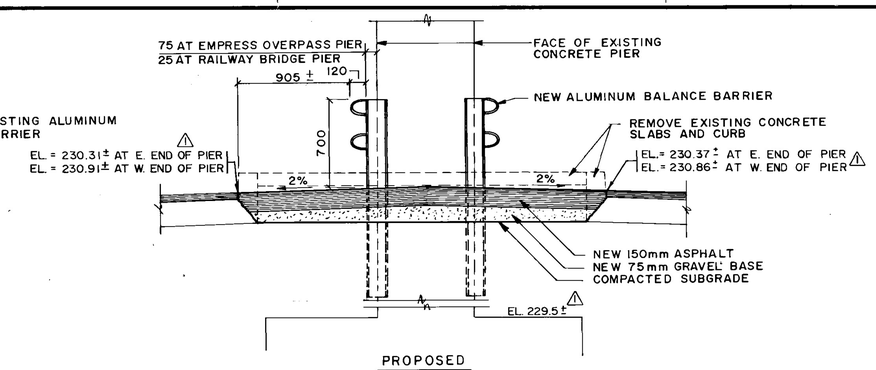

PROPOSED

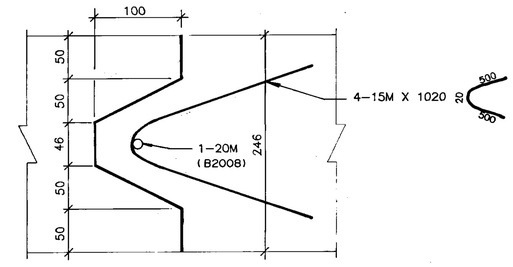

1 REMOVABLE CONCRETE MEDIAN BARRIER INTERLOCKING DETAIL
N.T.S.

SECTION A-A
NTS

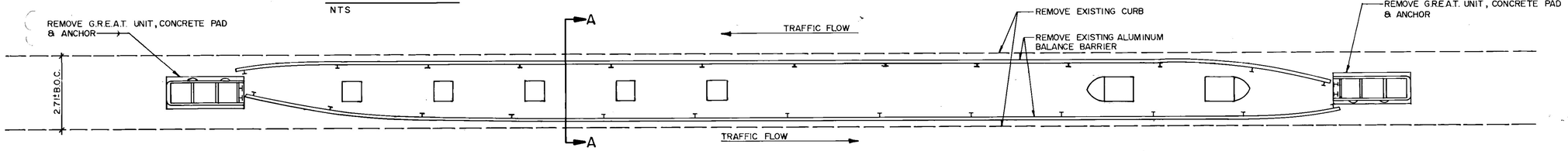

PLAN OF EXISTING ALUMINUM BALANCE BARRIER

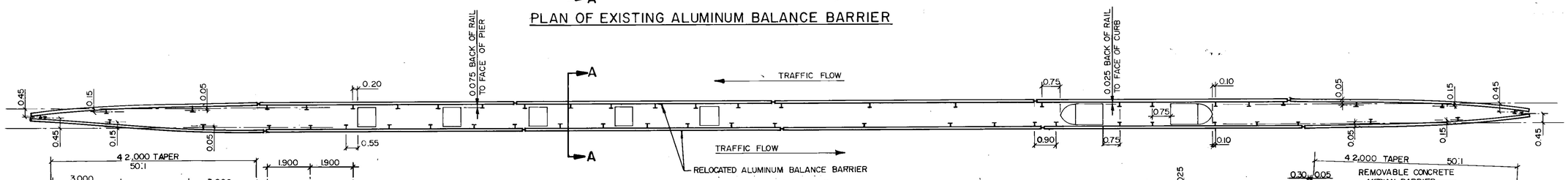

PLAN OF RELOCATED ALUMINUM BALANCE BARRIER ⚠
FOR DURATION OF CONSTRUCTION PERIOD WITH TEMPORARY END BURY SECTION

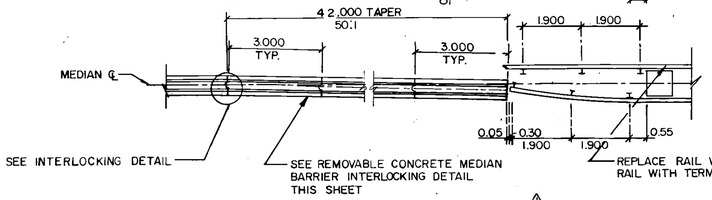

CONNECTION TO REMOVABLE CONCRETE BARRIER ⚠

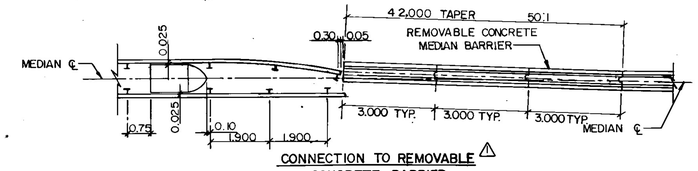

CONNECTION TO REMOVABLE CONCRETE BARRIER ⚠

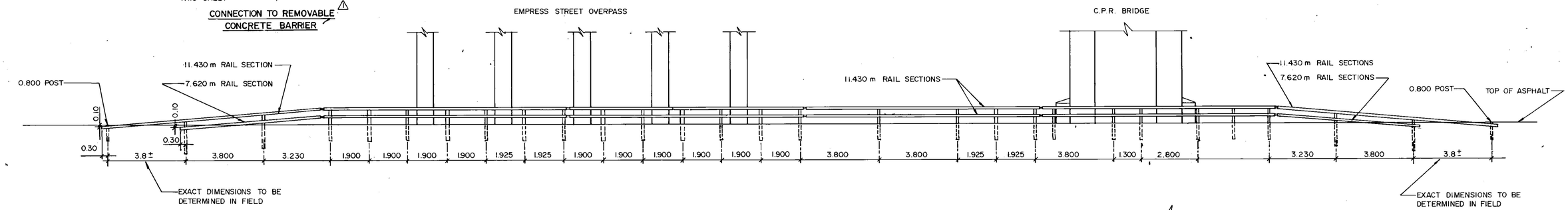

ELEVATION OF RELOCATED ALUMINUM BALANCE BARRIER
FOR DURATION OF CONSTRUCTION PERIOD WITH TEMPORARY END BURY SECTION.

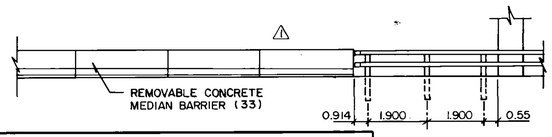

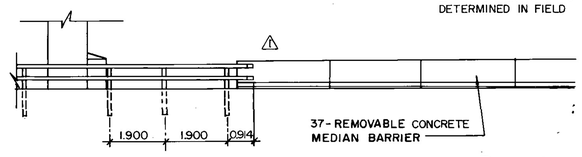

BILL OF MATERIALS

ITEM	QUANTITY REQUIRED ⚠ FOR RELOCATED BARRIER	QUANTITY AVAILABLE FROM EXISTING BARRIER
11.430 m RAIL SECTIONS	20	16
7.620 m RAIL SECTIONS	4	NIL
1.600 m POSTS	52	26
0.800 m POSTS	4	NIL
SPLICE BARS	20	12
RAIL CLAMP BARS	216	104
CAP SCREWS	432	256
WASHERS	432	256

NOTES:

1. NEW LOCATION OF POSTS MAY VARY FROM LOCATION SHOWN DUE TO PIER FOOTINGS.
2. ALL POSTS 1.600 m LONG EXCEPT WHERE NOTED OTHERWISE.
3. ADDITIONAL BARRIER COMPONENTS WILL BE SUPPLIED BY THE CITY OF WINNIPEG.

AS-BUILT
DATE 91.02.26 BY
CHECKED BY

B-5903-31

LOCATION APPROVED
UNDERGROUND STRUCTURES
N/A
SUPV U/G STRUCTURES COMMITTEE DATE

NOTE:
LOCATION OF UNDERGROUND STRUCTURES AS SHOWN ARE BASED ON THE BEST INFORMATION AVAILABLE BUT NO GUARANTEE IS GIVEN THAT ALL EXISTING UTILITIES ARE SHOWN OR THAT THE GIVEN LOCATIONS ARE EXACT. CONFIRMATION OF EXISTENCE AND EXACT LOCATION OF ALL SERVICES MUST BE OBTAINED FROM THE INDIVIDUAL UTILITIES BEFORE PROCEEDING WITH CONSTRUCTION.

B.M.
ELEV

NO	REVISIONS	DATE	BY
2	REVISED AS CONSTRUCTED	90-12-14	FPC
⚠	ADDENDUM	90-3-12	G.O.

WARDROP ENGINEERING INC.

DESIGNED BY	G.O.	CHECKED BY	M.S.
DRAWN BY	G.M.D.	APPROVED BY	
HOR SCALE	1:100	AUTHORIZED BY	DATE
VERTICAL		W. NAUMKO/ STREETS & BRIDGE ENGINEER	
DATE	90/01/15	ACCEPTED BY	DATE
		G.R. SMITH/ BRIDGE ENGINEER	

ENGINEER'S SEAL
PROVINCE OF MANITOBA
90/02/23
G. O. OUELLETTE
REGISTERED PROFESSIONAL ENGINEER

CONSULTANT DRAWING NO.
890007-02-00

THE CITY OF WINNIPEG
WORKS AND OPERATIONS DIVISION
STREETS AND TRANSPORTATION DEPARTMENT

EMPRESS STREET OVERPASS
STRUCTURE REHABILITATION, STRENGTHENING AND RELATED WORKS
MISCELLANEOUS DETAILS

CITY DRAWING NUMBER
B100-90-28(R1)