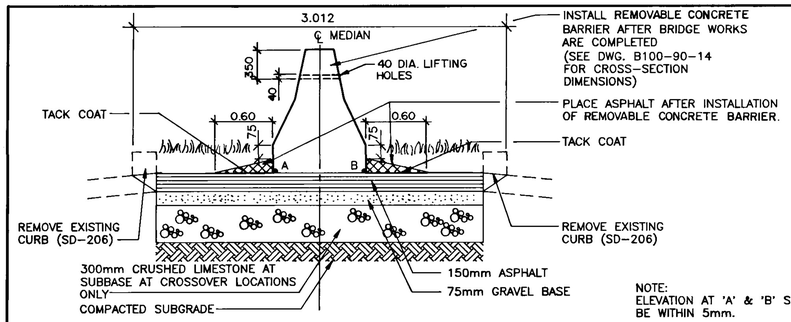


NOTE:
ELEVATION AT 'A' & 'B' SHALL BE WITHIN 5mm.

1 RECONSTRUCTION OF PORTAGE AVENUE MEDIAN ⚠
N.T.S.

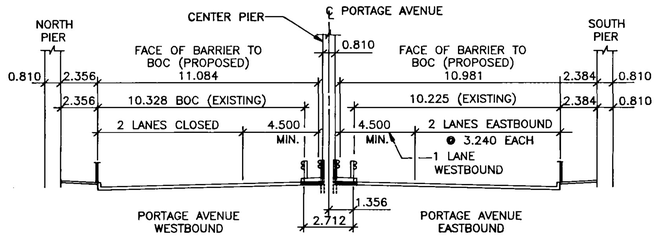


2 TYPICAL CROSS SECTION LOOKING EAST
N.T.S. (SHOWING RELOCATION OF ALUMINUM MEDIAN BARRIER). ⚠

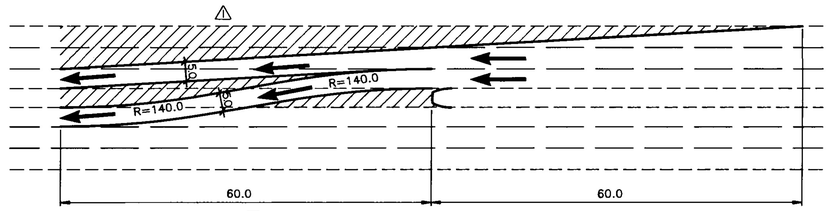


3 TYPICAL MEDIAN CROSSOVER LAYOUT
N.T.S.

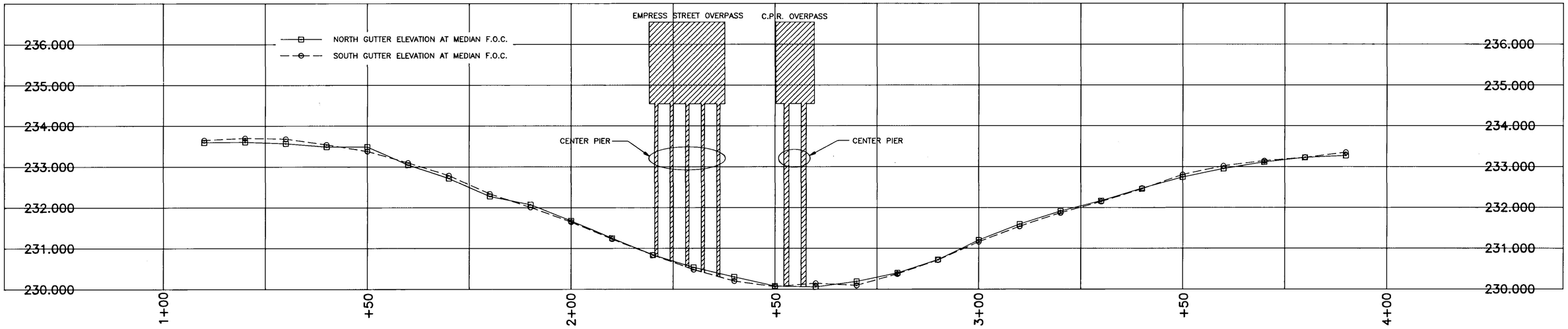


PROFILE
HOR. SCALE: 1:500
VERTICAL: 1:50

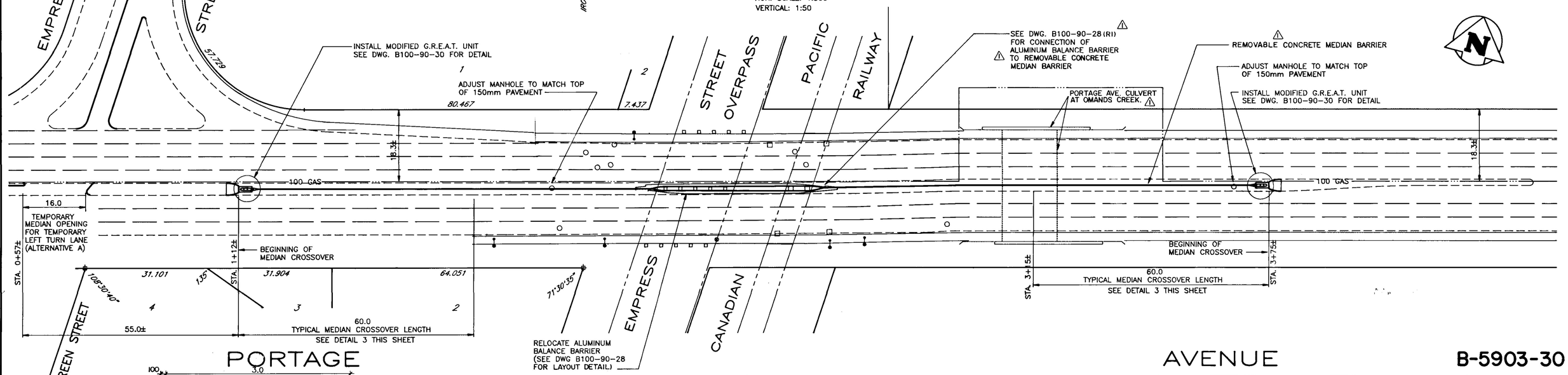


PORTAGE AVENUE

B-5903-30

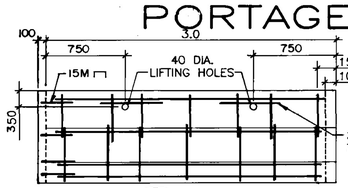


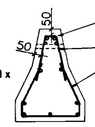


10M INTERMEDIATE DEFORMED LONGITUDINAL BARS
7-20M DEFORMED BARS

NOTE:
SEE DWG. B100-90-28 FOR INTERLOCKING DETAIL

4 REMOVABLE CONCRETE MEDIAN DETAIL ⚠
N.T.S.

**AS-BUILT**
DATE 91.02.26 BY
CHECKED BY

| NO. | REVISIONS | DATE | BY |
|---|---|---|---|
| 2 | REVISED AS CONSTRUCTED | 90-12-14 | FPC |
| ⚠ | ADDENDUM | 90-3-12 | G.O. |

B.M. ELEV.

**WARDROP ENGINEERING INC.**

| | | | |
|---|---|---|---|
| DESIGNED BY | G.O. | CHECKED BY | M.S. |
| DRAWN BY | G.M.D. | APPROVED BY | |
| HOR. SCALE: / VERTICAL: | 1:500 OR AS NOTED | AUTHORIZED BY / DATE | 1990 02 23 |
| | | ACCEPTED BY / DATE | 1990 02 23 |
| DATE | 90/01/15 | | |

W. MAUNKO/STREETS & BRIDGES ENGINEER
G.R. SMITH/BRIDGE ENGINEER

ENGINEER'S SEAL
PROVINCE OF MANITOBA
90/02/27
G. O. OUELLETTE
REGISTERED PROFESSIONAL ENGINEER

CONSULTANT DRAWING NO.
890007-02-00

**THE CITY OF WINNIPEG**
**WORKS AND OPERATIONS DIVISION**
STREETS AND TRANSPORTATION DEPARTMENT

**EMPRESS STREET OVERPASS**
STRUCTURE REHABILITATION, STRENGTHENING AND RELATED WORKS

PORTAGE AVENUE MEDIAN RECONSTRUCTION

CITY DRAWING NUMBER
B100-90-27(RI)