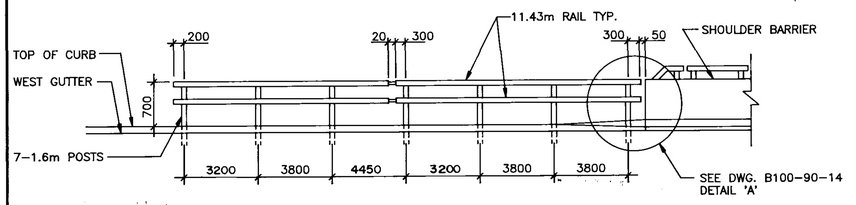

ELEVATION

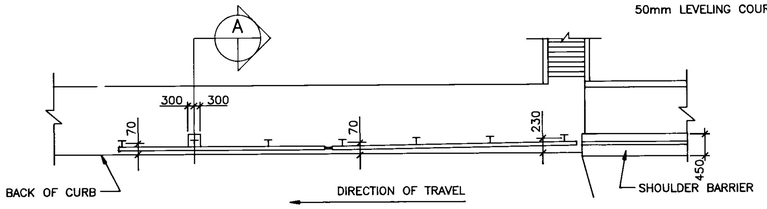

PLAN

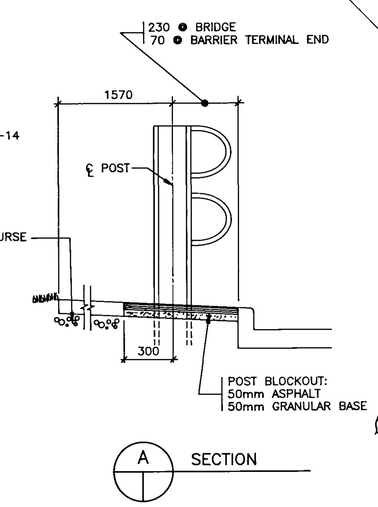

A SECTION

1 WEST SIDE – SOUTH END OF BRIDGE

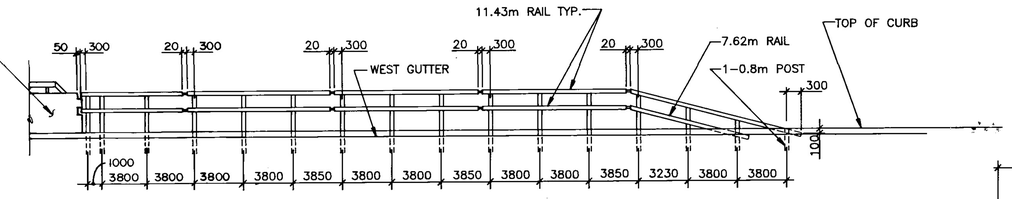

ELEVATION

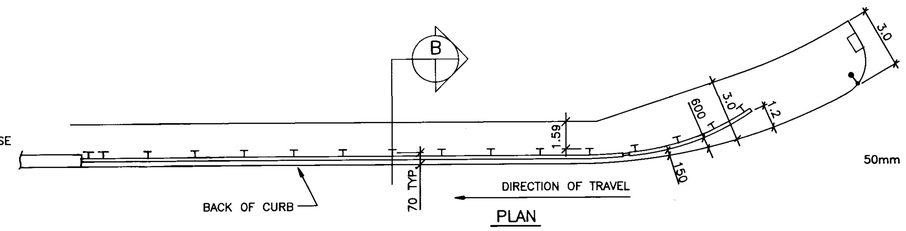

PLAN

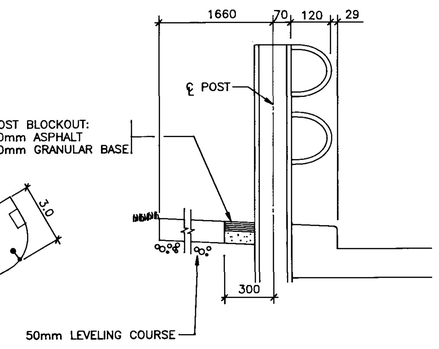

B SECTION

2 WEST SIDE – NORTH END OF BRIDGE △1

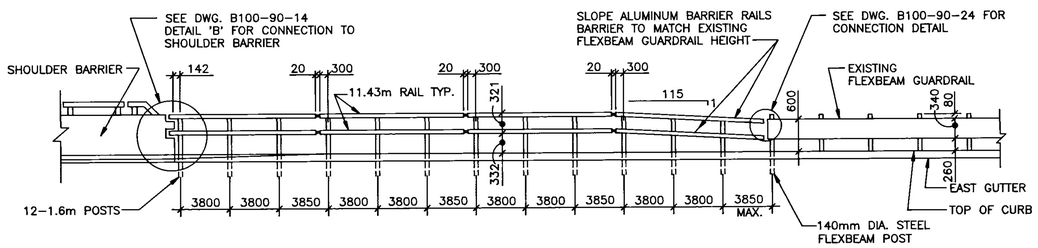

ELEVATION

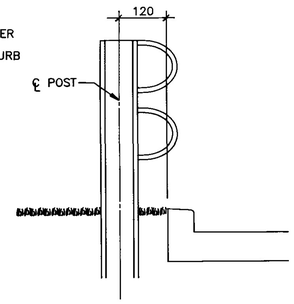

C SECTION

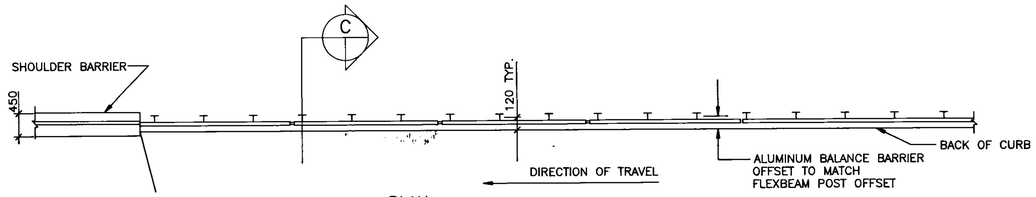

PLAN

3 EAST SIDE – SOUTH END OF BRIDGE

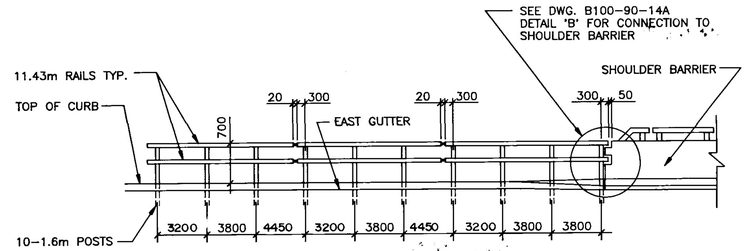

ELEVATION

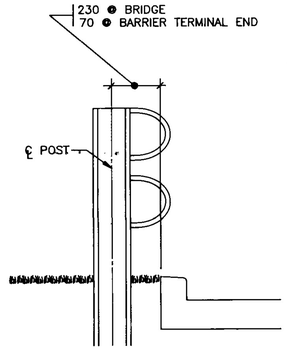

D SECTION

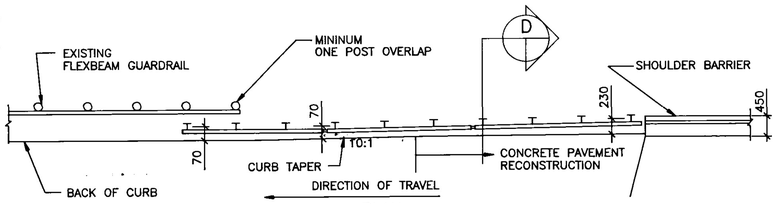

PLAN

3 EAST SIDE – NORTH END OF BRIDGE

BILL OF MATERIALS

ITEM	QUANTITY			
	WEST SIDE – SOUTH END OF BRIDGE	WEST SIDE – NORTH END OF BRIDGE	EAST SIDE – SOUTH END OF BRIDGE	EAST SIDE – NORTH END OF BRIDGE
13–13 X 25 STAINLESS STEEL HEX. HEAD CAP SCREW	56	110	96	80
27 O.D. X 14 I.D. X 2 THICK STAINLESS STEEL WASHER	56	110	96	80
RAIL CLAMP BAR	28	54	48	40
SPLICE BAR	2	6	6	4
RAIL END CAP	4	2	0	4
BARRIER POST 1600 mm	7	13	12	10
BARRIER POST 800 mm	0	1	0	0
BARRIER RAIL 11430 mm	4	7	8	6
BARRIER RAIL 7620 mm	0	1	0	0

AS-BUILT
DATE 91.02.26 BY
CHECKED BY

B-5903-28

B.M.
ELEV.

NO.	REVISIONS	DATE	BY
2	REVISED AS CONSTRUCTED	90-12-14	FPC
△1	ADDENDUM	90-3-19	G.O.

WARDROP ENGINEERING INC.

DESIGNED BY G.O. | CHECKED BY M.S.
DRAWN BY G.M.D. | APPROVED BY
HOR. SCALE: VERTICAL: NOT TO SCALE
AUTHORIZED BY W. NAUMKO/STRUCTS & BRIDGES ENGINEER — DATE 90.02.23
ACCEPTED BY G.R. SMITH/BRIDGE ENGINEER — DATE 90.02.23
DATE 90/01/15

ENGINEER'S SEAL
PROVINCE OF MANITOBA
90/02/20
G. O. OUELLETTE
REGISTERED PROFESSIONAL ENGINEER

CONSULTANT DRAWING NO.
890007–02–00

THE CITY OF WINNIPEG
WORKS AND OPERATIONS DIVISION
STREETS AND TRANSPORTATION DEPARTMENT

EMPRESS STREET OVERPASS
STRUCTURE REHABILITATION, STRENGTHENING AND RELATED WORKS

LAYOUT OF BALANCE ALUMINUM SHOULDER BARRIER AND DETAILS

CITY DRAWING NUMBER
B100–90–25(R1)