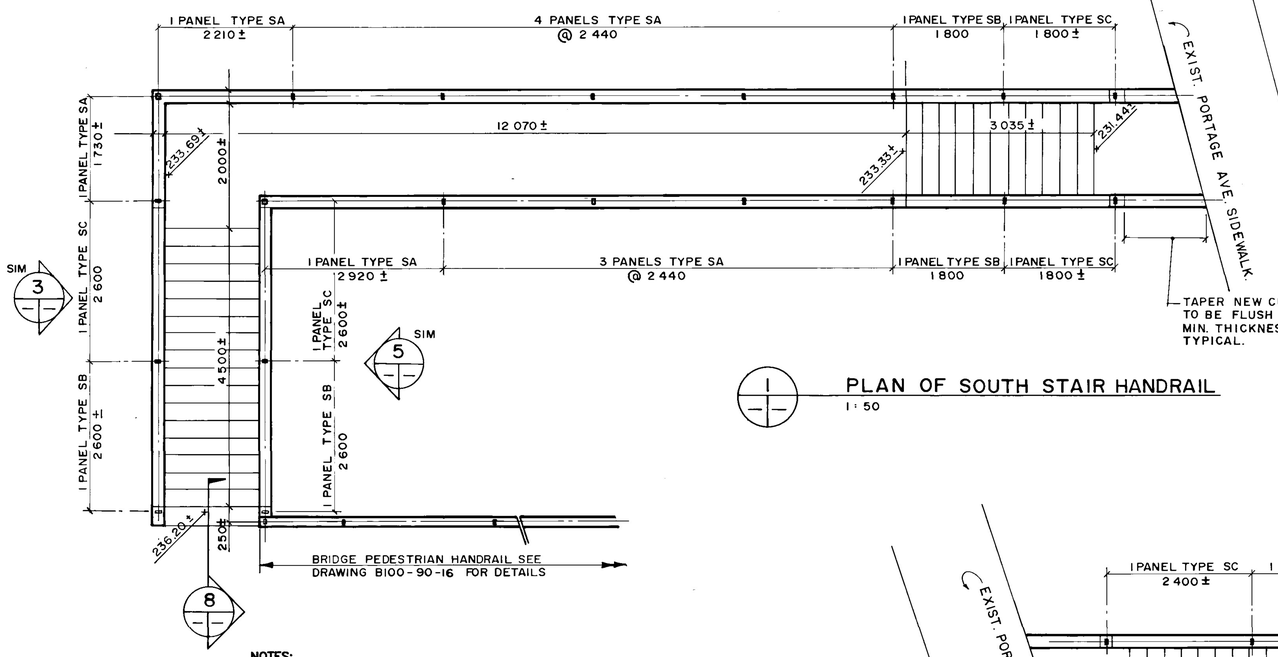


1 — PLAN OF SOUTH STAIR HANDRAIL
1 : 50

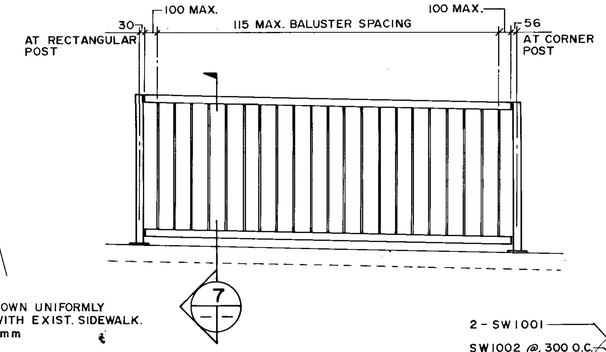


6 — TYPICAL PANEL ELEVATION
1 : 20

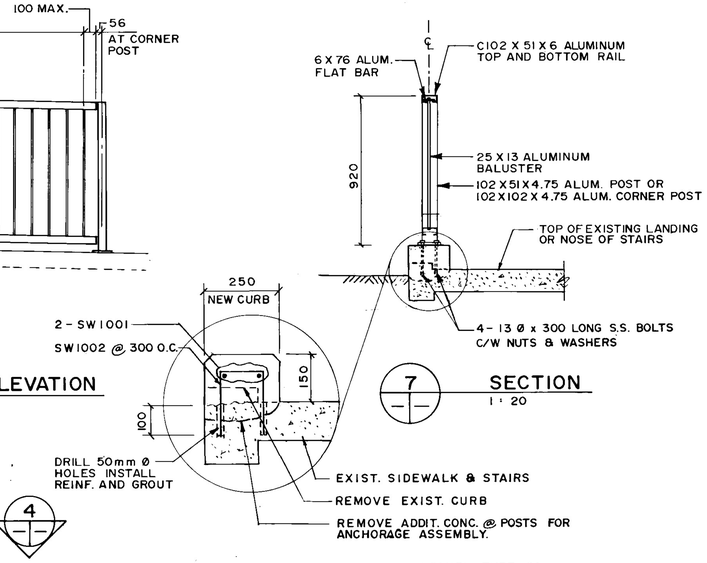


7 — SECTION
1 : 20

**NOTES:**

1. Remove existing steel pipe handrail and replace with new aluminum pedestrian handrail as shown.
2. This drawing is representational only. All dimensions must be verified by the contractor prior to fabrication of handrails.
3. Connections, inserts, notes, and handrail panel details same as bridge pedestrian handrail details unless noted otherwise. Refer to drawing B100-90-16.
4. Existing stair concrete to be patched with epoxy grout as directed by Contract Administrator.
5. Remove existing concrete curbs, chip down additional 50mm @ posts to accomodate post bolting assembly & install new curb. See Section 7

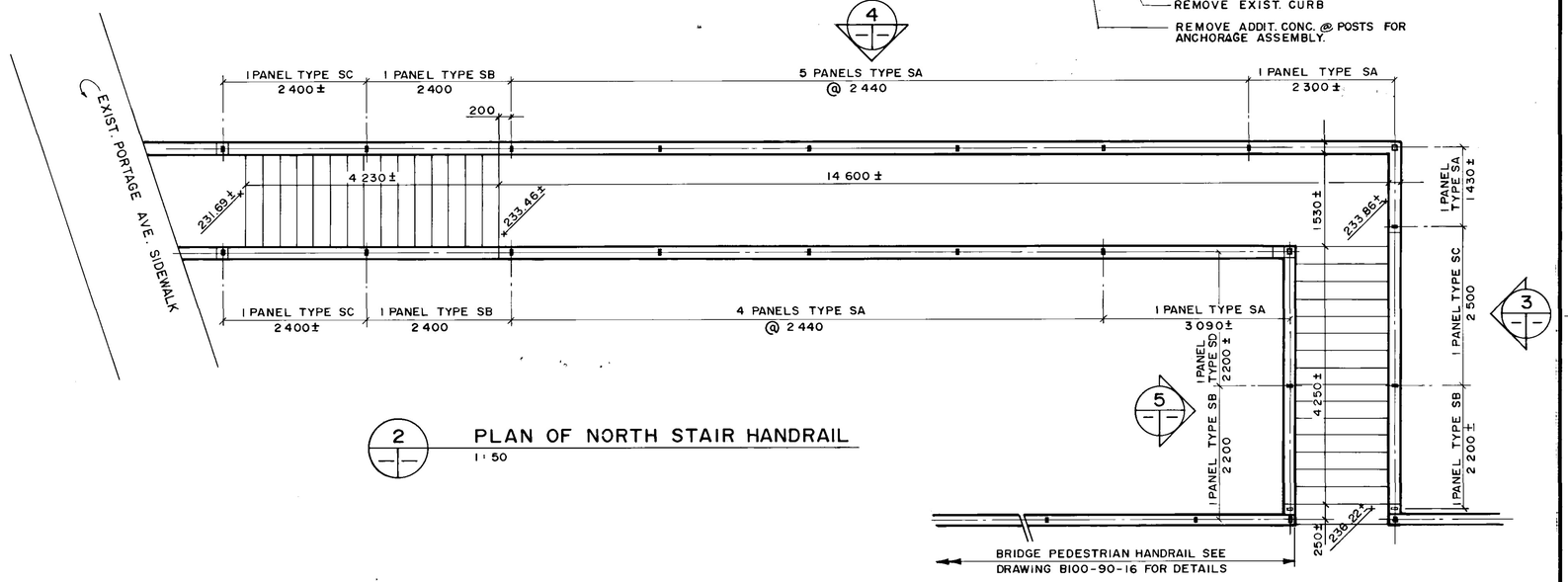


2 — PLAN OF NORTH STAIR HANDRAIL
1 : 50

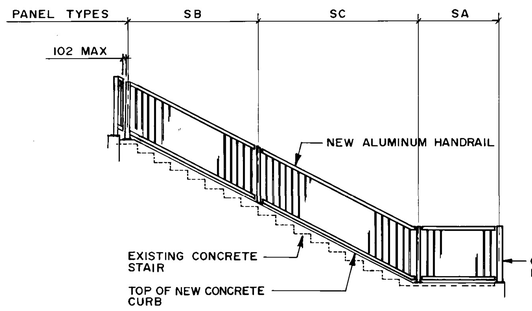


3 — TYPICAL ELEVATION
1 : 50

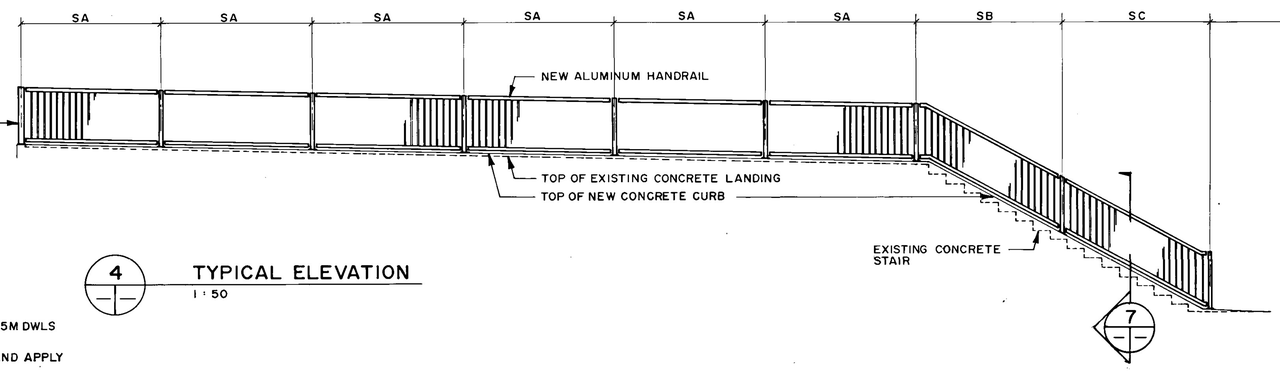


4 — TYPICAL ELEVATION
1 : 50

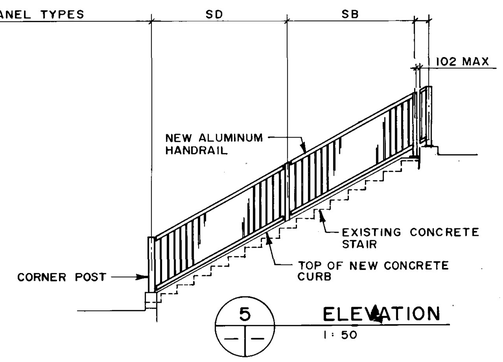


5 — ELEVATION
1 : 50

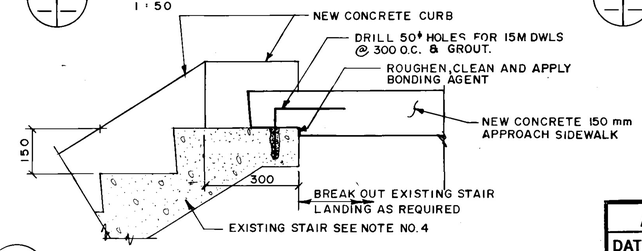


8 — SECTION - TOP OF EXISTING STAIR
1 : 10

**AS-BUILT**
DATE 91.02.26 BY
CHECKED BY

**LOCATION APPROVED**
UNDERGROUND STRUCTURES
N/A
SUPV. U/G STRUCTURES COMMITTEE — DATE

NOTE:
LOCATION OF UNDERGROUND STRUCTURES AS SHOWN ARE BASED ON THE BEST INFORMATION AVAILABLE BUT NO GUARANTEE IS GIVEN THAT ALL EXISTING UTILITIES ARE SHOWN OR THAT THE GIVEN LOCATIONS ARE EXACT. CONFIRMATION OF EXISTENCE AND EXACT LOCATION OF ALL SERVICES MUST BE OBTAINED FROM THE INDIVIDUAL UTILITIES BEFORE PROCEEDING WITH CONSTRUCTION.

B.M.
ELEV.

| NO | REVISIONS | DATE | BY |
|---|---|---|---|
| 1 | REVISED AS CONSTRUCTED | 90-12-14 | FPC |

**WARDROP ENGINEERING INC.**
WINNIPEG TORONTO TRAVERSE BAY EDMONTON

| | | | |
|---|---|---|---|
| DESIGNED BY | JC & FPC | CHECKED BY | |
| DRAWN BY | LG | APPROVED BY | |
| HOR. SCALE / VERTICAL | AS NOTED | AUTHORIZED BY / DATE | W. NAUMICK / STREETS & BRIDGES ENGINEER — 90 12 23 |
| | | ACCEPTED BY / DATE | G.R. SMITH / BRIDGE ENGINEER — 91 12 23 |
| DATE | JAN. 15, 1990 | | |

ENGINEER
PROVINCE OF MANITOBA
C. D. STEWART
REGISTERED ENGINEER
CONSULTANT DRAWING NO.
890007-02-00

**THE CITY OF WINNIPEG**
**WORKS AND OPERATIONS DIVISION**
STREETS AND TRANSPORTATION DEPARTMENT

**EMPRESS STREET OVERPASS**
STRUCTURE REHABILITATION, STRENGTHENING AND RELATED WORKS

**ALUMINUM PEDESTRIAN HANDRAILS NORTH AND SOUTH STAIRS**

CITY DRAWING NUMBER
B100-90-19

**B-5903-22**