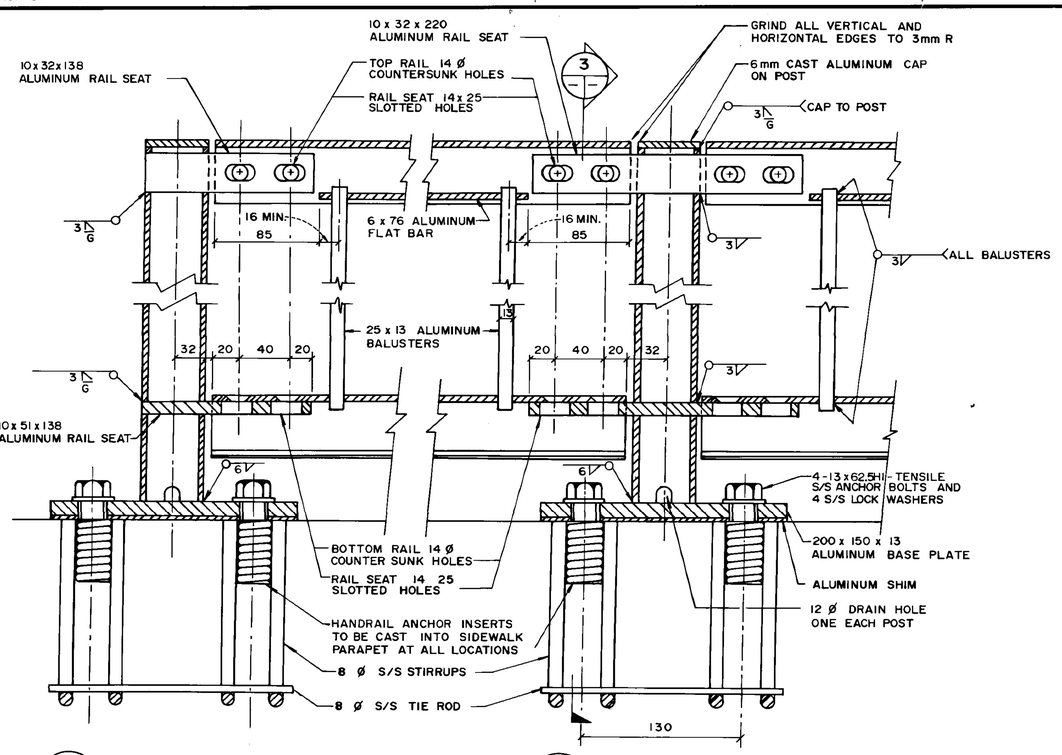

1 END POST
1:2.5

2 INTERMEDIATE POST
1:2.5

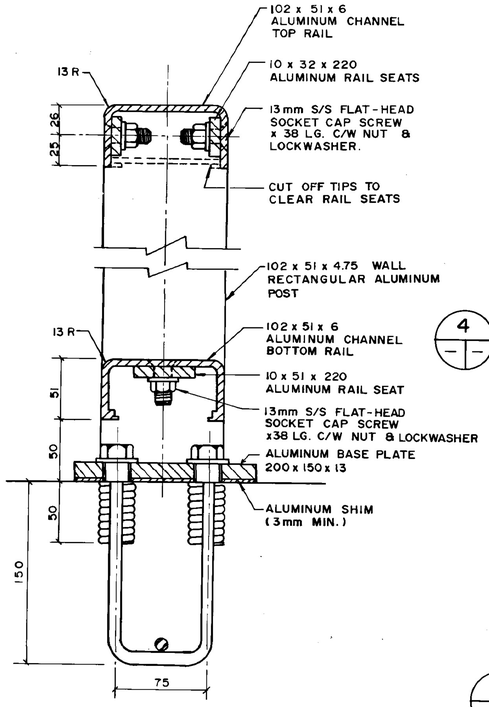

3 SECTION
1:2.5

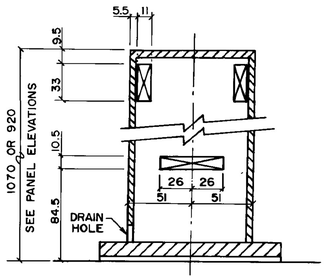

4 POST DETAIL SHOWING SLOTS FOR RAIL SEATS
1:2.5

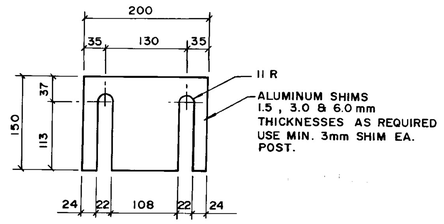

5 POST SHIM PLATE
1:5

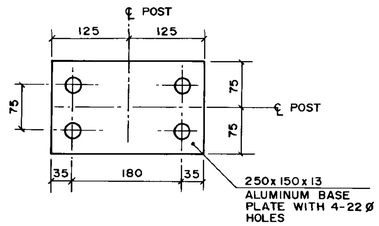

6 PLAN-CORNER POST BASE PLATE
1:5

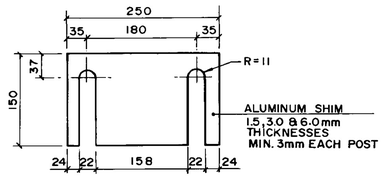

7 CORNER POST SHIM PLATE
1:5

TYPICAL POST DETAILS

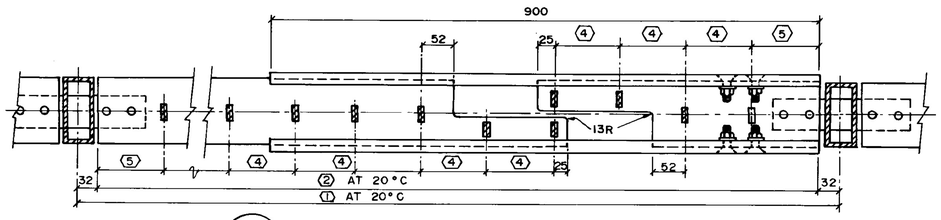

8 PLAN AT LOWER RAIL
1:5

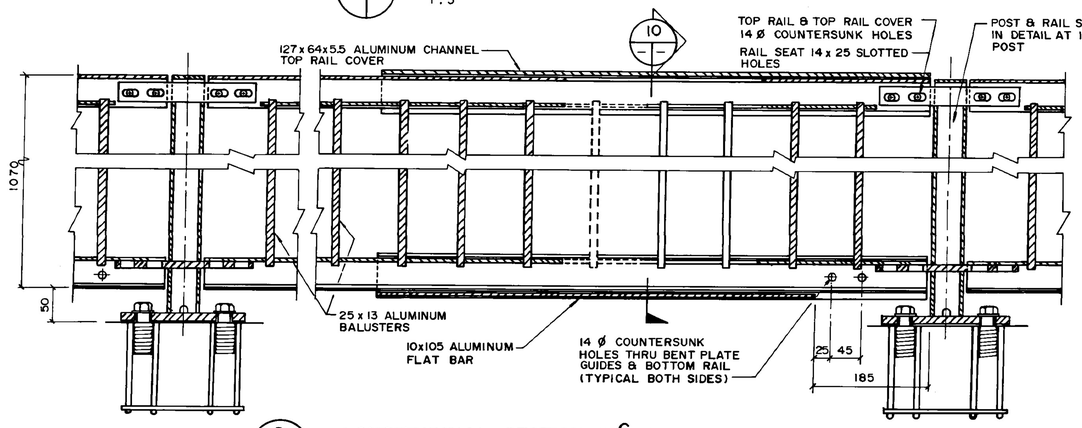

9 LONGITUDINAL SECTION @ ℄ RAILS
1:5

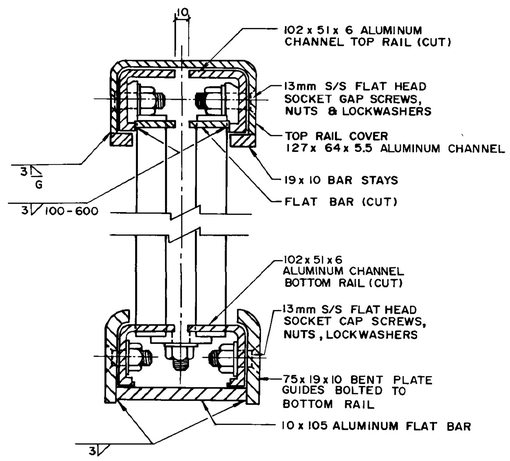

10 SECTION
1:2.5

EXPANSION PANEL TYPE 'B' DETAILS

B-5903-20

AS-BUILT
DATE 91.02.26 BY
CHECKED BY

NO	REVISIONS	DATE	BY
1	REVISED AS CONSTRUCTED	901214	FPC

B.M. ELEV

WARDROP ENGINEERING INC.

DESIGNED BY JC & FPC
CHECKED BY
DRAWN BY GI
APPROVED BY
HOR. SCALE AS NOTED
VERTICAL
AUTHORIZED BY W. NAUMKO/STREETS & BRIDGES ENGINEER DATE 90 12 23
ACCEPTED BY G.R. SMITH/BRIDGE ENGINEER DATE 90 12 23
DATE JAN. 15, 1990

ENGINEER PROVINCE OF MANITOBA C.D. STEWART 90/02/20 REGISTERED ENGINEER

CONSULTANT DRAWING NO. 890007-02-00

THE CITY OF WINNIPEG
WORKS AND OPERATIONS DIVISION
STREETS AND TRANSPORTATION DEPARTMENT

EMPRESS STREET OVERPASS
STRUCTURE REHABILITATION, STRENGTHENING AND RELATED WORKS

ALUMINUM PEDESTRIAN HANDRAIL DETAILS 2

CITY DRAWING NUMBER B100-90-17