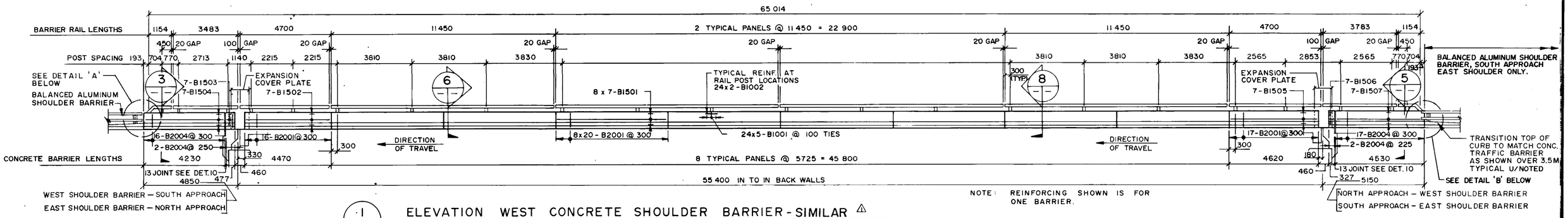

1 ELEVATION WEST CONCRETE SHOULDER BARRIER - SIMILAR △
EAST CONCRETE SHOULDER BARRIER - SHOWN
1 : 100

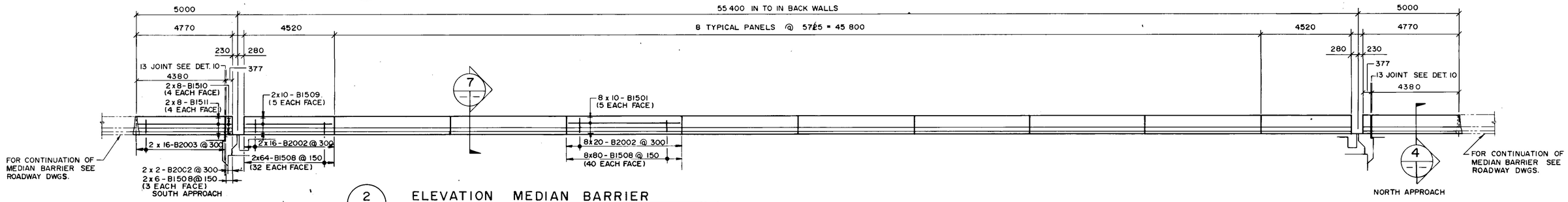

2 ELEVATION MEDIAN BARRIER
1 : 100

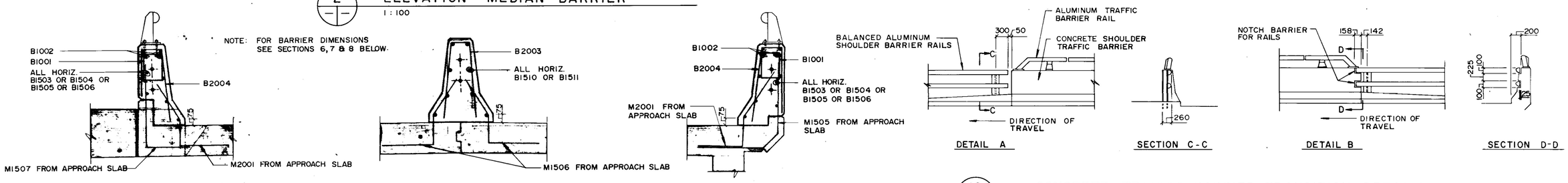

3 WEST SHOULDER BARRIER - APPROACH
1 : 20

4 MEDIAN BARRIER - APPROACH
1 : 20

5 EAST SHOULDER BARRIER - APPROACH
1 : 20

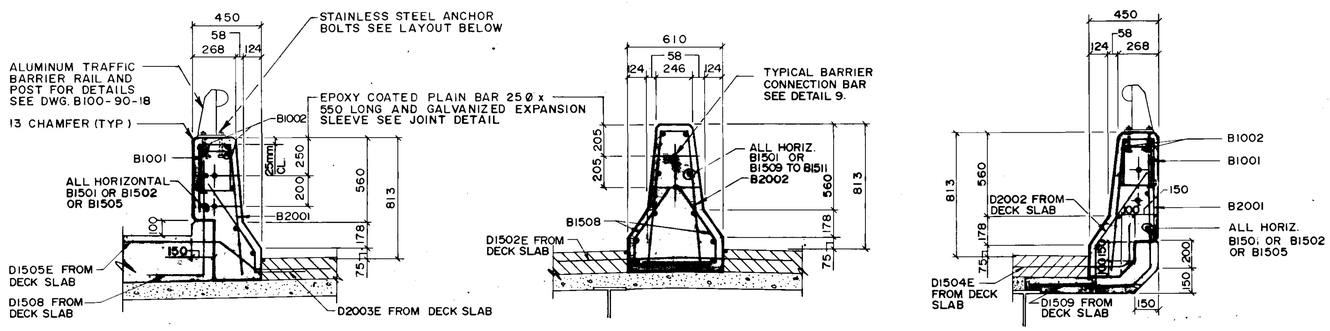

6 WEST SHOULDER BARRIER - BRIDGE
1 : 20

7 MEDIAN BARRIER - BRIDGE
1 : 20

8 EAST SHOULDER BARRIER - BRIDGE
1 : 20

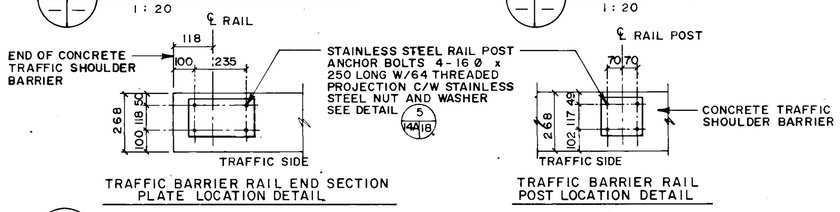

11 RAIL POST ANCHOR BOLT LAYOUT DETAILS
NTS (PLAN VIEW)

12 CONCRETE TRAFFIC BARRIER TRANSITION DETAILS
1 : 50

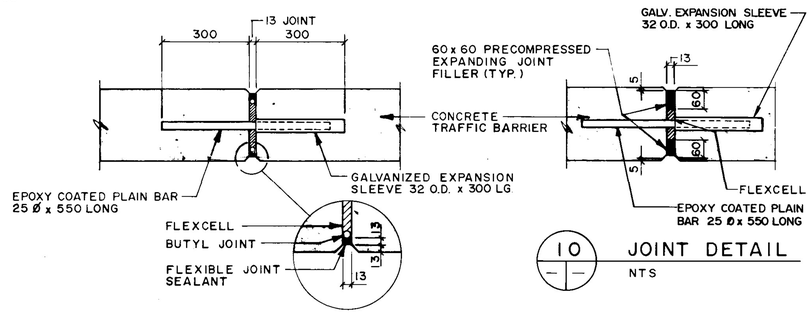

9 TYPICAL BARRIER CONNECTION DETAIL
NTS

10 JOINT DETAIL
NTS

NOTE: EPOXY COATED PLAIN BAR AND GALVANIZED EXPANSION SLEEVE TO BE LOCATED AT ALL CONCRETE SHOULDER TRAFFIC BARRIER JOINTS, HELD IN PLACE SECURELY BY A WOODEN TEMPLATE DURING CONCRETE PLACEMENT.

REINFORCING STEEL NOT CONTINUOUS THROUGH JOINTS.

AS-BUILT
DATE 91.02.26 BY
CHECKED BY

LOCATION APPROVED
UNDERGROUND STRUCTURES
N/A
SUPV. U/G STRUCTURES COMMITTEE — DATE

NOTE:
LOCATION OF UNDERGROUND STRUCTURES AS SHOWN ARE BASED ON THE BEST INFORMATION AVAILABLE BUT NO GUARANTEE IS GIVEN THAT ALL EXISTING UTILITIES ARE SHOWN OR THAT THE GIVEN LOCATIONS ARE EXACT. CONFIRMATION OF EXISTENCE AND EXACT LOCATION OF ALL SERVICES MUST BE OBTAINED FROM THE INDIVIDUAL UTILITIES BEFORE PROCEEDING WITH CONSTRUCTION

B.M.
ELEV

NO	REVISIONS	DATE	BY
1	REVISED AS CONSTRUCTED	90-12-14	FPC
1	ADDENDUM	90-3-19	FPC

WARDROP ENGINEERING INC.
WINNIPEG TORONTO THUNDER BAY EDMONTON

DESIGNED BY	JC & FPC	CHECKED BY	
DRAWN BY	LG & GI	APPROVED BY	
HOR. SCALE / VERTICAL	AS NOTED	AUTHORIZED BY	DATE 91.02.23
DATE	JAN. 15, 1990	ACCEPTED BY	DATE 91.02.23

AUTHORIZED BY: N. NAUMOVICH / CITY ENGINEER & BRIDGES ENGINEER
ACCEPTED BY: G.R. SMITH / BRIDGE ENGINEER

ENGINEERS SEAL: PROVINCE OF MANITOBA — C. D. STEWART — 90/02/26 — REGISTERED ENGINEER

CONSULTANT DRAWING NO. 890007-02-00

THE CITY OF WINNIPEG
WORKS AND OPERATIONS DIVISION
STREETS AND TRANSPORTATION DEPARTMENT

EMPRESS STREET OVERPASS
STRUCTURE REHABILITATION, STRENGTHENING AND RELATED WORKS

CONCRETE & REINFORCING DETAILS MEDIAN AND SHOULDER TRAFFIC BARRIERS

CITY DRAWING NUMBER: B100-90-14A(R1)

B-5903-17