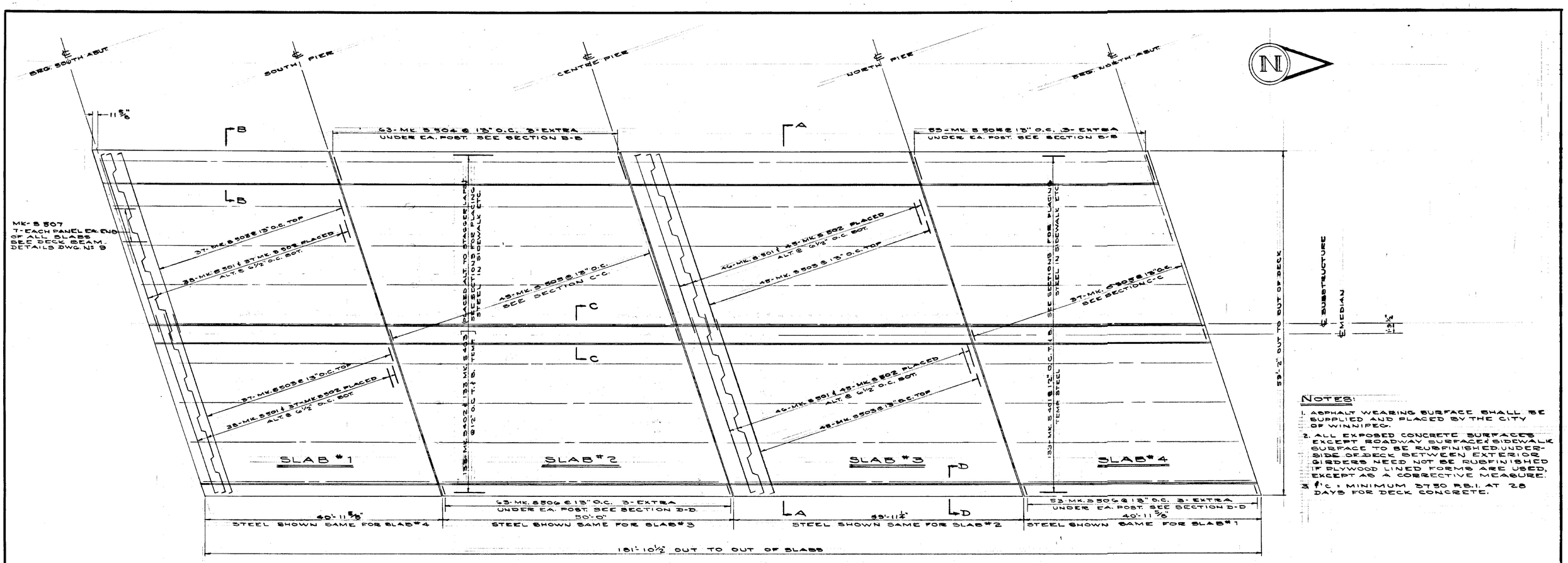

DECK PLAN REINFORCING

SCALE: 1/8" = 1'-0"

NOTES:

1. ASPHALT WEARING SURFACE SHALL BE SUPPLIED AND PLACED BY THE CITY OF WINNIPEG.
2. ALL EXPOSED CONCRETE SURFACES EXCEPT ROADWAY SURFACE & SIDEWALK SURFACE TO BE RUBFINISHED. UNDERSIDE OF DECK BETWEEN EXTERIOR GIRDERS NEED NOT BE RUBFINISHED IF PLYWOOD LINED FORMS ARE USED, EXCEPT AS A CORRECTIVE MEASURE.
3. f'c = MINIMUM 3750 P.S.I. AT 28 DAYS FOR DECK CONCRETE.

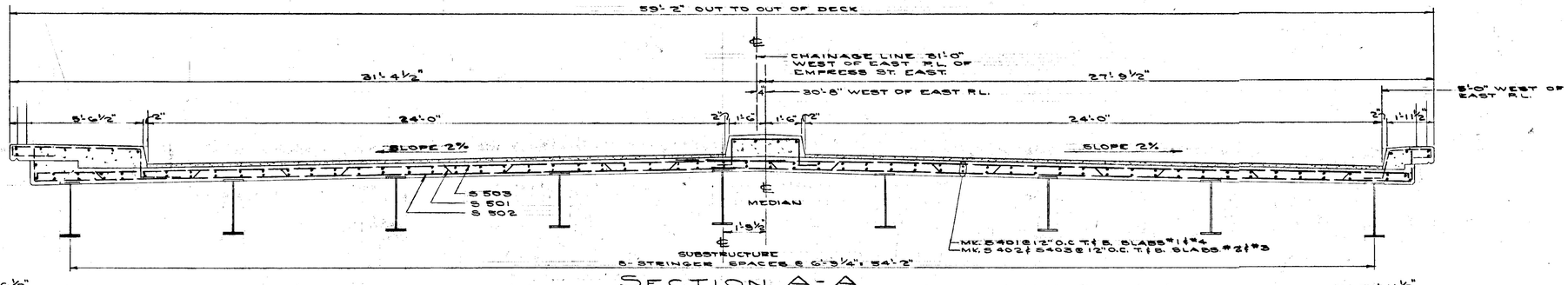

SECTION A-A

SCALE: 3/8" = 1'-0"

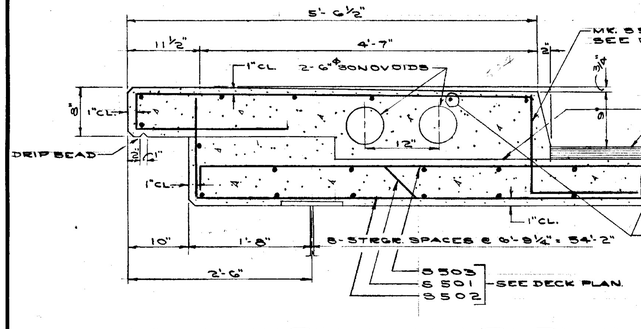

SECTION B-B

SHOWING SIDEWALK DETAIL
SCALE: 1" = 1'-0"

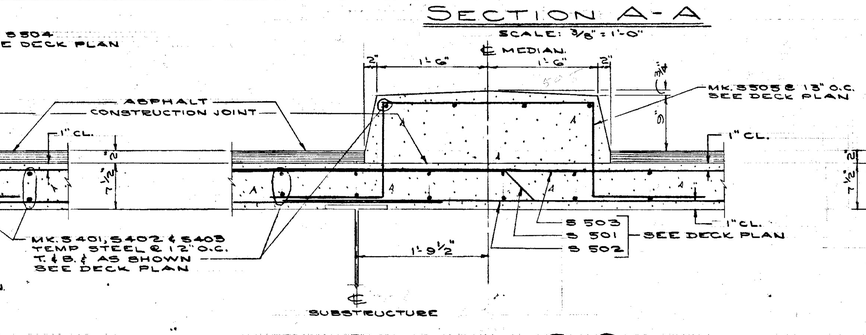

SECTION C-C

SHOWING SECTION THRU MEDIAN.
SCALE: 1" = 1'-0"

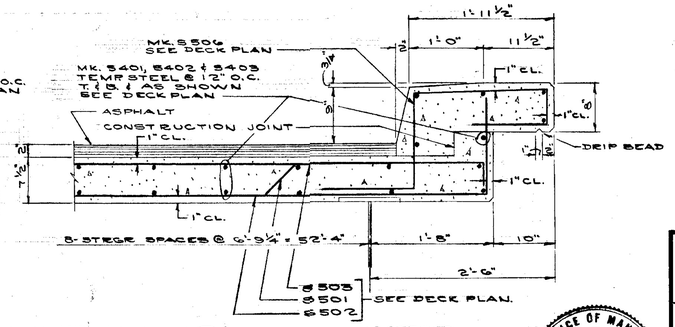

SECTION D-D

SHOWING SECTION THRU BARRIER CURB.
SCALE: 1" = 1'-0"

REVISIONS			
No.	DESC.	DATE	BY
1	Length Bay Centre & North Pier & Overall Length	June 1959	T.O.

B-5072-11

PROVINCE OF MANITOBA
R. W. McKNIGHT
REGISTERED ENGINEER

W. L. WARDROP & ASSOCIATES
(MANAGEMENT) LTD.
ENGINEERING CONSULTANTS
WINNIPEG CANADA

DECK REINFORCING LAYOUT
PORTAGE AVENUE OVERPASS
POLO PARK DEVELOPMENT

Scale: AS SHOWN	Date: JULY 31, 1958
Designed By: R.W. McK.	Project No. 5868
Drawn By: T.O.	Drawing No. 10
Checked By: RWM, JRZ, HBM.	