You created this PDF from an application that is not licensed to print to novaPDF printer (http://www.novapdf.com)

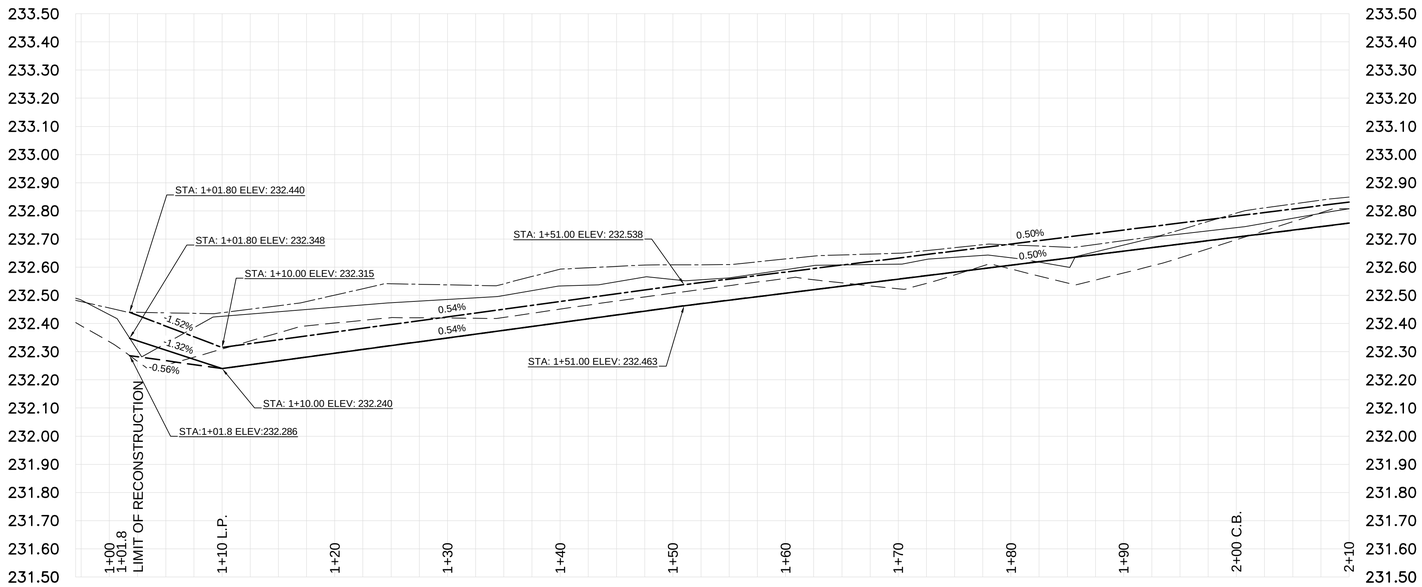

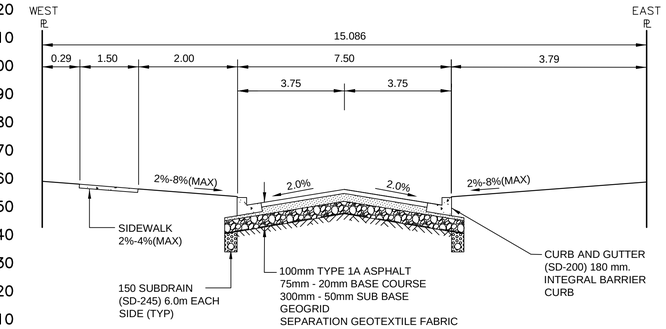

TYPICAL CROSS SECTION
N.T.S

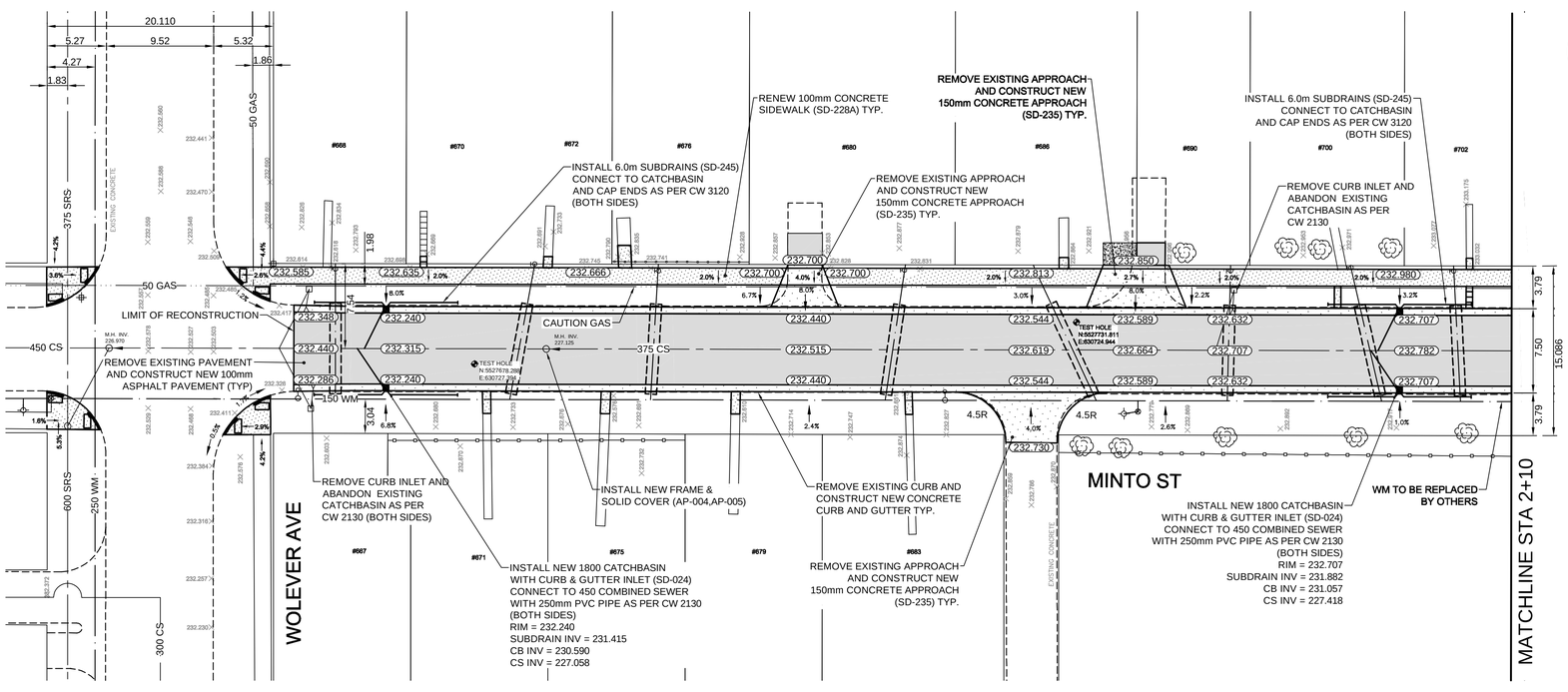

PRELIMINARY
NOT TO BE USED FOR CONSTRUCTION

ALL WATER SERVICES WITHIN THE LIMITS OF THE RECONSTRUCTION SHALL BE INSULATED AS PER SPECIFICATION E-10

PLAN :

CONSTRUCTION NOTES

1) CURB REPLACEMENT AS DIRECTED BY THE CONTRACT ADMINISTRATOR.
2) ALL STREET RADIUS CURB UNDER 15M RADIUS SHALL BE REPLACED AS MODIFIED OR AS DIRECTED BY THE CONTRACT ADMINISTRATOR.
3) INSTALL DETECTIBLE WARNING SURFACE TILES AT CURB RAMPS AS PER CW3326.

WARNING

IF POWER EQUIPMENT OR EXPLOSIVES ARE TO BE USED FOR EXCAVATION ON THIS PROJECT THE CONTRACTOR MUST:

1)OBTAIN CLEARANCE FROM THE GAS UTILITY PRIOR TO EXCAVATION.
2)TAKE PRECAUTION TO AVOID DAMAGE TO GAS UTILITY INSTALLATIONS.

SEE PROVINCIAL REGULATION 210/72 FOR DETAILS

METRIC
WHOLE NUMBERS INDICATE MILLIMETRES
DECIMALIZED NUMBERS INDICATE METRES

BID OPPORTUNITY NO. 4-2017

EXISTING	LEGEND - PLAN	PROPOSED	EXISTING	LEGEND - PLAN	PROPOSED	EXISTING	LEGEND - PROFILE	PROPOSED
	HYDRANT			LDS/WWS			CONCRETE	
	VALVE			WATERMAIN			CONCRETE SIDEWALK	
	CURB STOP			GAS			ASPHALT	
	MANHOLE			TRAFFIC SIGNALS			GRAVEL	
	CATCH BASIN			HYDRO/STREET LIGHT			CONCRETE PAVERS	
	CURB INLET			MTS			PAVING STONE	
	HYDRO POLE			CURB RENEWAL			FENCE	
	LIGHT STANDARD			PROPERTY LINE		EXISTING	LEGEND - PLAN	PROPOSED
	TRAFFIC SIGNAL POLE			RAMP CURB			WEST GUTTER	
	SURVEY BAR		231.000	ELEVATIONS	231.000		CENTER LINE	
	TEST HOLE			TREE			EAST GUTTER	

LOCATION APPROVED
UNDERGROUND STRUCTURES

SUPR. U/G STRUCTURES COMMITTEE — DATE

NOTE:
LOCATION OF UNDERGROUND STRUCTURES AS SHOWN ARE BASED ON THE BEST INFORMATION AVAILABLE. BUT NO GUARANTEE IS GIVEN THAT ALL EXISTING UTILITIES ARE SHOWN OR THAT THE GIVEN LOCATIONS ARE EXACT. CONFIRMATION OF EXISTENCE AND EXACT LOCATION OF ALL SERVICES MUST BE OBTAINED FROM THE INDIVIDUAL UTILITIES BEFORE PROCEEDING WITH CONSTRUCTION.

B.M. I.B. @ N.E. CORNER OF #706 MINTO ST.
ELEV. 232.140

NO.	REVISIONS	DATE	BY
1.	SUBMIT FOR PLAN APPROVAL	17/02/23	T.K.

ENGINEERING DIVISION
TECHNOLOGY SERVICES BRANCH
106 - 1155 PACIFIC AVE

DESIGNED BY	T.K.	CHECKED BY	R.W.
DRAWN BY	T.K.	APPROVED BY	
HOR. SCALE:	1 : 250		
VERTICAL:	1 : 10		
DATE	2017/03/29		

ENGINEER'S SEAL
PROVINCE OF MANITOBA
FIRST
LAST
Member
#
REGISTERED ENGINEER

Winnipeg

THE CITY OF WINNIPEG
PUBLIC WORKS DEPARTMENT

MINTO STREET
FROM **WOLEVER AVENUE** TO **ST MATTHEWS AVENUE**
ASPHALT RECONSTRUCTION AND ASSOCIATED WORKS
FROM **STA. 1+00** TO **STA. 2+10**

CITY DRAWING NUMBER
SE-17-17
SHEET 6 OF 13
1