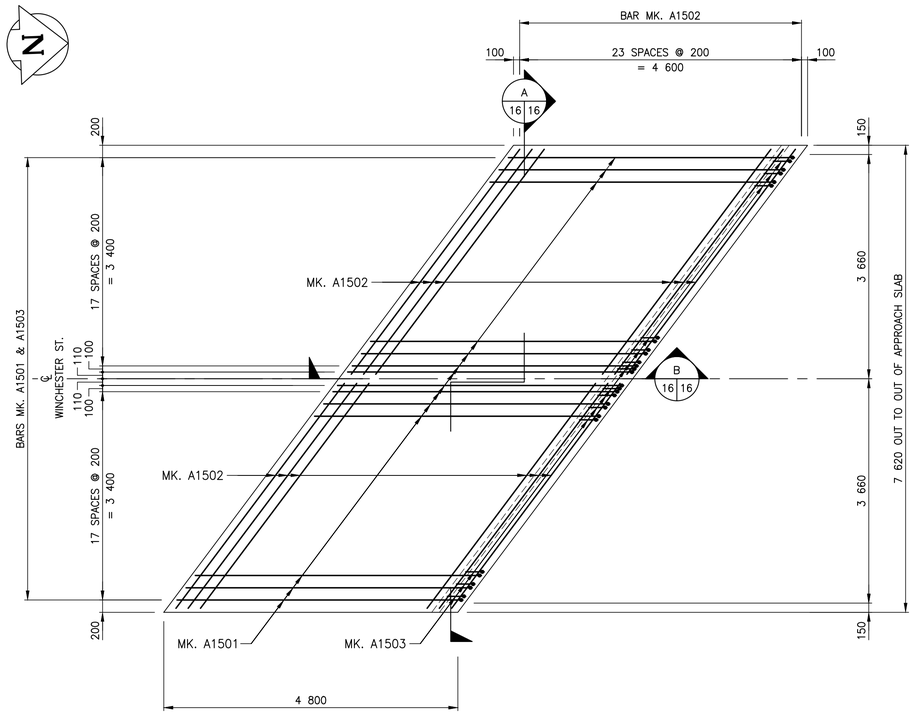

PLAN

SHOWING TOP MAT REINFORCING STEEL IN APPROACH SLAB.
NORTH APPROACH SLAB SHOWN. SOUTH APPROACH SLAB SIMILAR.
SCALE 1:50

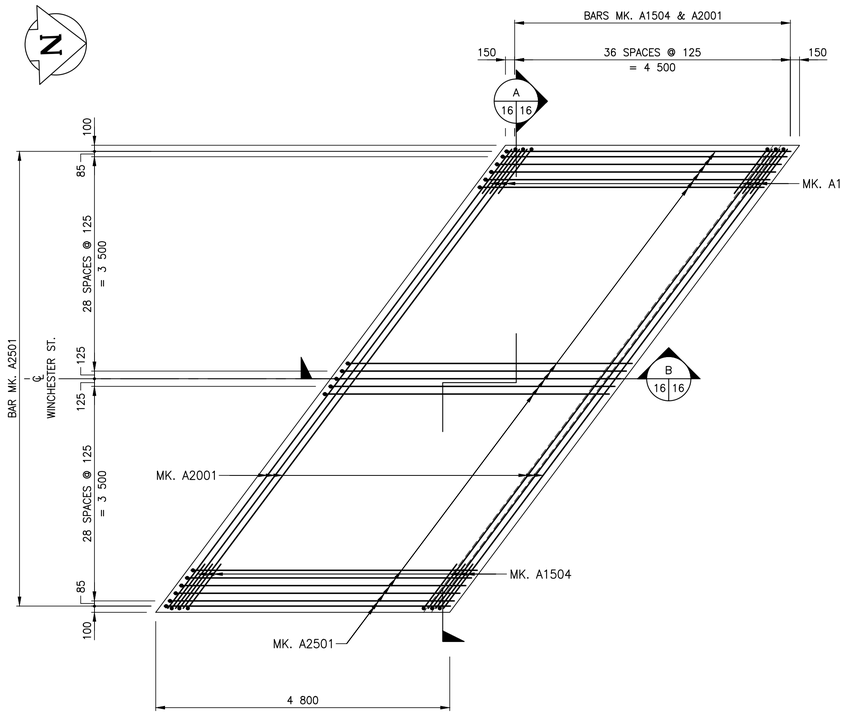

PLAN

SHOWING BOTTOM MAT REINFORCING STEEL IN APPROACH SLAB.
NORTH APPROACH SLAB SHOWN. SOUTH APPROACH SLAB SIMILAR.
SCALE 1:50

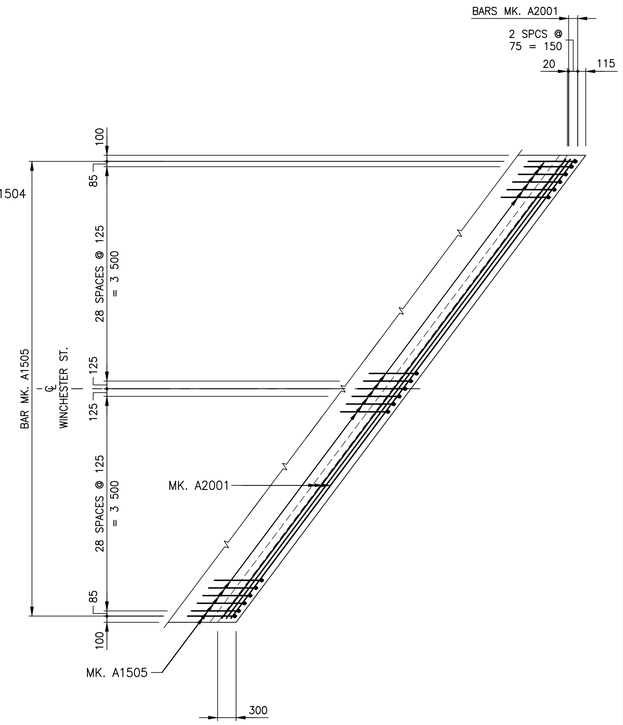

PLAN

SHOWING ADDITIONAL BOTTOM MAT REINFORCING STEEL IN APPROACH SLAB
NORTH APPROACH SLAB SHOWN. SOUTH APPROACH SLAB SIMILAR.
SCALE 1:50

WEST EAST SOUTH NORTH

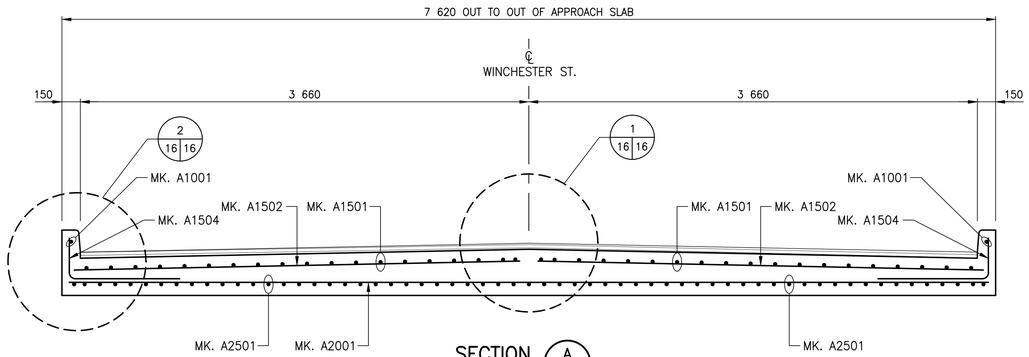

SECTION A
SCALE 1:25 (16 16)

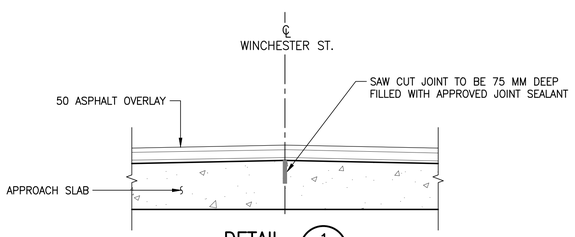

DETAIL 1
SCALE 1:10 (16 16)

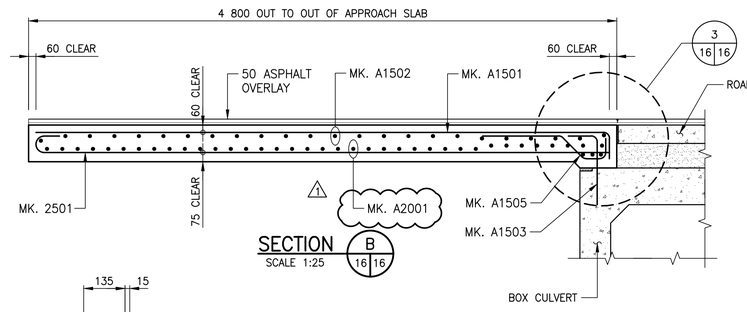

SECTION B
SCALE 1:25 (16 16)

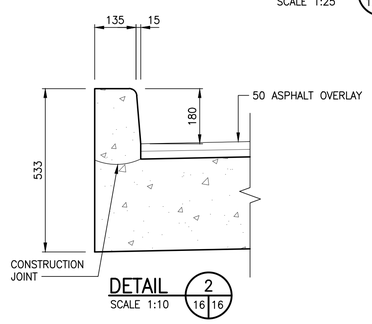

DETAIL 2
SCALE 1:10 (16 16)

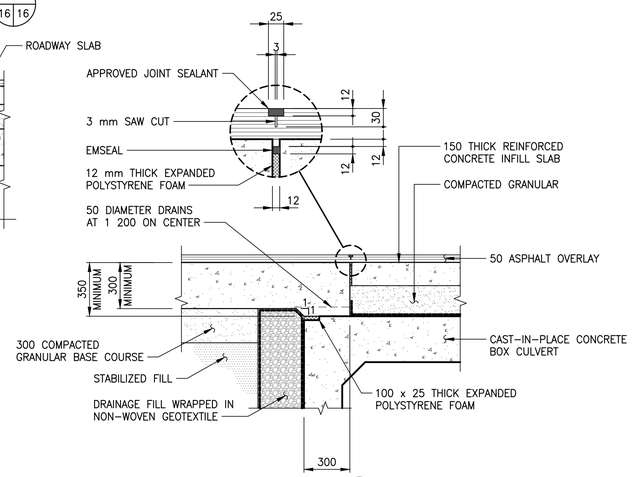

DETAIL 3
SCALE 1:20 (16 16)

METRIC
WHOLE NUMBERS INDICATE MILLIMETRES
DECIMALIZED NUMBERS INDICATE METRES

NOTE

1. FOR BILL OF REINFORCING STEEL, SEE SHEET 23.

NOTE:
These design documents are prepared solely for the use by the party with whom the design professional has entered into a contract and there are no representations of any kind made by the design professional to any party with whom the design professional has not entered into a contract.

ENGINEERS GEOSCIENTISTS MANITOBA
Certificate of Authorization
WSP Canada Group Limited
No. 6657

LOCATIONS APPROVED UNDERGROUND STRUCTURES

SIGNED BY: _____ SUPV U/G STRUCTURES _____ DATE

LOCATION OF UNDERGROUND STRUCTURES AS SHOWN ARE BASED ON THE BEST INFORMATION AVAILABLE BUT NO GUARANTEE IS GIVEN THAT ALL EXISTING UTILITIES ARE SHOWN OR THAT THE GIVEN LOCATIONS ARE EXACT CONFIRMATION OF EXISTANCE AND EXACT LOCATION OF ALL SERVICES MUST BE OBTAINED FROM THE INDIVIDUAL UTILITIES BEFORE PROCEEDING

G.B.M. = TOP NUT OF FIRST HYDRANT SOUTH OF INTERSECTION BETWEEN NESS AVENUE AND LINWOOD STREET
ELEV. = 233.659

No.	REVISIONS	DATE	BY
1	ISSUED FOR ADDENDUM No. 2	17.12.08	JL
0	ISSUED FOR TENDER	17.11.23	JL

WSP Canada Group Limited
93 Lombard Avenue, Suite 111
Winnipeg MB R3B 3B1
T+ 1 204-943-3178
F+ 1 204-943-4948
www.wsp.com

DESIGNED BY	AG	CHECKED BY	MLW
DRAWN BY	FD	APPROVED BY	JL
HOR. SCALE	AS NOTED	RELEASED FOR CONSTRUCTION	
VERTICAL	AS NOTED		
DATE	17.11.23	DATE	

ENGINEER'S SEAL: PROVINCE OF MANITOBA — A. CHATEFAR — Member 37456 — REGISTERED PROFESSIONAL ENGINEER

CONSULTANT PROJECT No. 17M-00806-00

Winnipeg

THE CITY OF WINNIPEG
PUBLIC WORKS DEPARTMENT
ENGINEERING DIVISION

TRURO CREEK CULVERT REPLACEMENT AT WINCHESTER STREET

APPROACH SLAB DETAILS

CITY DRAWING NUMBER: C322-17-16
BID OPPORTUNITY NUMBER: 1014-2017
SHEET 16 OF 25
REV 0

A1 SIZE (594 mm x 841 mm)
Plotted: December 8, 2017 at 12:13:40 PM | Last saved by: Petersonc
File: P:\2017\17M-00806-00 – Truro Creek Culvert Replacements\MMM Drawings\17M-00806-00 Truro Creek Culvert Replacements DD Winchester 16 approach slabs.dwg | Layout: 16 Approach Slab Details