A1 SIZE – 594mm x 841mm

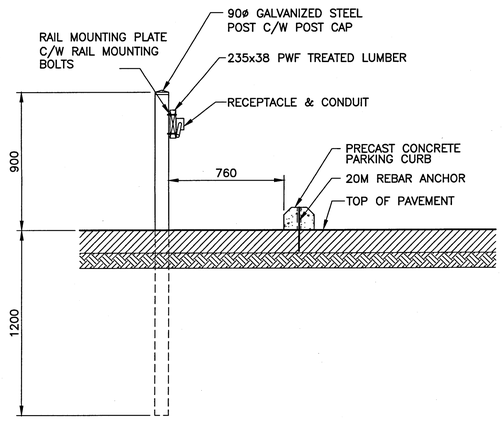

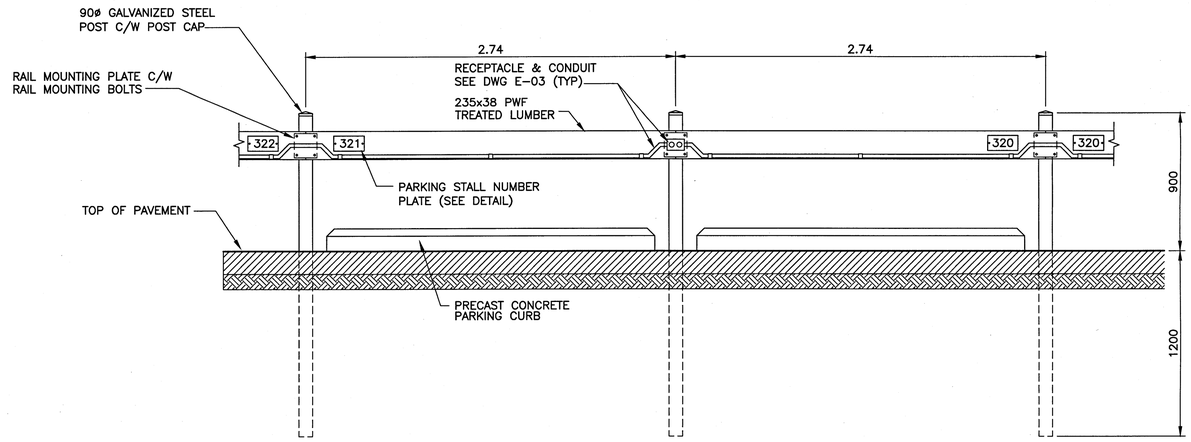

PARKING LOT HITCHING RAIL DETAILS (TYP.)

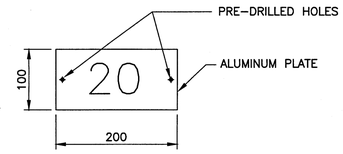

NOTE:

1. 100mmx200mm POWDER COATED WHITE WHITE ALUMINUM C/W VINYL CUT LETTERS APPLIED UP TO 3 DIGITS
2. PARKING STALL NUMBER PLATES CAN BE ORDERED THROUGH ABLE SIGNS (CONTACT AT 204-275-1470) OR APPROVED EQUAL.

PARKING STALL NUMBER PLATE DETAIL

SCALE: 1:10

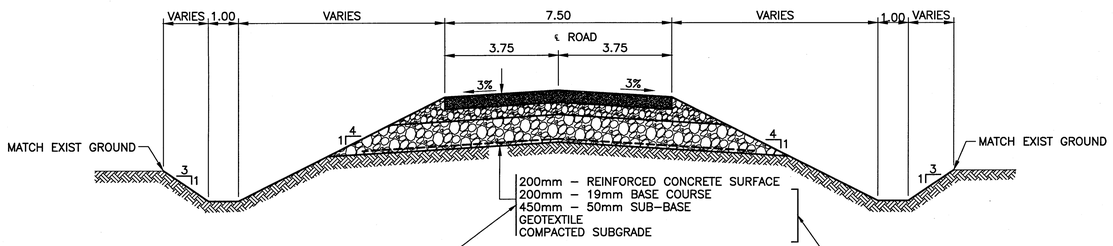

TYPICAL CROSS-SECTION TO BE USED FOR ALL CONCRETE SURFACED ROADWAYS AND PARKING LOTS ON-SITE UNLESS OTHERWISE NOTED ON THE DESIGN DRAWINGS.

EXISTING ROAD BASE CONSTRUCTED IN CONTRACT 1 FOR MAJORITY OF PERIMETER ROADWAY AROUND SITE. BASE COURSE LAYER TO BE GRADED AND TOPPED UP WITH ADDITIONAL BASE COURSE MATERIAL AS REQUIRED BEFORE CONSTRUCTING CONCRETE PAVEMENT TO FINISHED GRADE. FOR ANY SEGMENTS OF SITE PERIMETER ROADWAY FOR WHICH A ROAD BASED HAS NOT YET CONSTRUCTED, TYPICAL CROSS SECTION SHOWN SHALL BE USED FOR FULL PAVEMENT THICKNESS.

CONCRETE PAVED PERIMETER ROAD SECTION (TYP.)

SCALE: H=1:100 V=1:50 (A1)

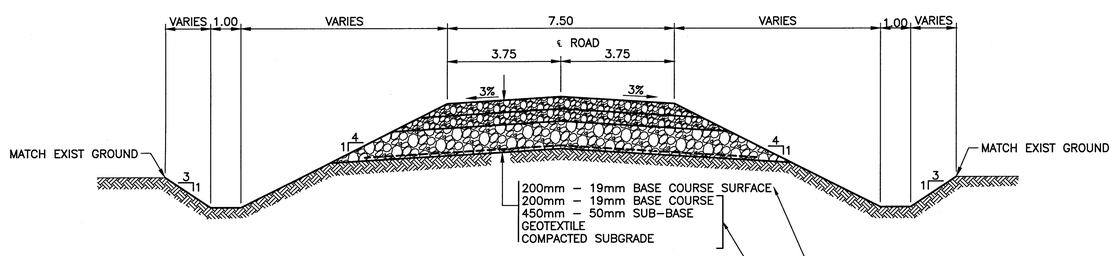

ADDITIONAL BASE COURSE SURFACE LAYER TO BE CONSTRUCTED TO FINISHED GRADES ALONG GRAVEL SURFACED PORTIONS OF SITE PERIMETER ROADWAYS AS NOTED ON DESIGN DRAWINGS.

EXISTING ROAD BASE CROSS-SECTION CONSTRUCTED IN CONTRACT 1 FOR MAJORITY OF SITE PERIMETER ROADWAY.

GRAVEL SURFACED PERIMETER ROAD SECTION (TYP.)

SCALE: H=1:100 V=1:50 (A1)

0 1.0 2.0 3.0 4.0m

SCALE: 1:50m (A1)

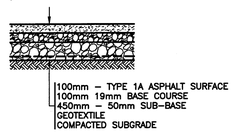

ASPHALT SURFACED DRIVE AISLE AND PARKING LOT CROSS-SECTION (TYP.)

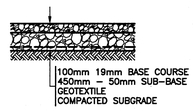

GRAVEL SURFACED PARKING AND ACCESS ROAD CROSS-SECTION (TYP.)

CONSTRUCTION NOTES:

1. ALL WORK SHALL BE PERFORMED IN ACCORDANCE WITH THE LATEST REVISION OF THE CITY OF WINNIPEG STANDARD CONSTRUCTION SPECIFICATIONS.

APEGM
Certificate of Authorization
KGS Group
No. 245

B.M. BRASS PLATE LOCATED IN GRADE BEAM OF ADMININSTRATON BUILDING
ELEV. 234.059

NO.	REVISIONS	DATE	DESIGN	CHECK
02	ISSUED FOR CONSTRUCTION – 976-2016	2017/04/05	EMS	BJM
01	ISSUED FOR CONSTRUCTION	08/2014	EMS	BJM
00	ISSUED FOR TENDER	06/2014	EMS	BJM

CH2MHILL. SNC-LAVALIN KGS GROUP

DESIGNED BY: EMS	CHECKED BY: BJM
DRAWN BY: DMW	APPROVED BY: RJH
SCALE: AS NOTED	RELEASED FOR CONSTRUCTION BY: J. SHUMKA
DATE: 2014/06/27	DATE: 2017/04/05
CONSULTANT NO.: 13-0338-002	

ENGINEER'S SEAL
PROVINCE OF MANITOBA
B.J. MIKOLAYENKO
Member
24688
REGISTERED PROFESSIONAL ENGINEER
MARCH 29 2017

Winnipeg
THE CITY OF WINNIPEG
WATER AND WASTE DEPARTMENT

SOUTH END WATER POLLUTION CONTOL CENTRE
SEWPCC UPGRADE/EXPANSION PROJECT
CIVIL
MISCELLANEOUS DETAILS

CITY DRAWING NUMBER	SHEET	REV.	SIZE
1-0102-CDTL-A001	001	02	A1

PLOT DATE: Mar 29, 2017 – 11:16am

FILE NAME: 1-0102-CDTL-A001-001.dwg

LAST SAVE: 2017/03/29 – 11:16am
PATH: P:\Projects\2013\13-0338-002\Dwg\Mun\Contract 4\1-0102-CDTL-A001-001.dwg