A1 SIZE – 594mm x 841mm

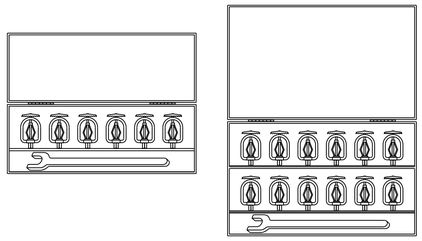

NOTES:

A. PROVIDE SPARE SPRINKLERS AND CABINETS IN ACCORDANCE WITH NFPA 13 (2013) 6.2.9.

B. THE REQUIRED NUMBER STIPULATED IN NFPA APPLIES TO EACH TYPE (STYLE AND RATING) IF FEWER THAN SIX OF A PARTICULAR TYPE, PROVIDE TWO SPARE SPRINKLERS.

C. MOUNT ON WALL NEAR FIRE SPRINKLER RISER AT 5'–0" ABOVE FINISHED FLOOR.

D. A LIST OF THE SPRINKLERS INSTALLED IN THE PROPERTY SHALL BE POSTED IN THE SPRINKLER CABINET AND SHALL MEET NFPA 13, 6.2.9.7.1 REQ.

SPARE SPRINKLER HEAD CABINET
NTS

2113–500

HYDRAULIC SYSTEM

THIS BUILDING IS PROTECTED BY A HYDRAULICALLY DESIGNED AUTOMATIC SPRINKLER SYSTEM

LOCATION

NO. OF SPRINKLERS

BASIS FOR DESIGN
1. DENSITY
2. DESIGNED AREA OF DISCHARGE

SYSTEM DEMAND
1. WATER FLOW RATE
2. RESIDUAL PRESSURE AT THE BASE OF THE RISER
3. STATIC PRESSURE
4. OCCUPANCY CLASSIFICATION
5. HOSE STREAM
6. CONTRACTORS NAME

NOTES:

A. SECURE SYSTEM SIGN TO ALARM VALVE WITH CHAIN. THE IDENTIFICATION SIGN SHALL BE IN ACCORDANCE WITH NFPA 13 (2013), PARAGRAPH 24.5.

B. GENERAL INFORMATION SIGN SHALL ALSO BE PROVIDED PER NFPA, 13 PARAGRAPH 24.6 REQUIREMENTS AND SECURED TO THE FIRE RISER.

SPRINKLER SYSTEM - GENERAL INFORMATION
FOR

High-piled storage	☐Yes	☐No	Date:	
Rack storage:	☐Yes	☐No	Flow test Data:	
Commodity class:			Static:	psi
Max storage ht	ft		Resid:	psi
Aisle width (min)	ft		Flow:	gpm
Encapsulation	☐Yes	☐No	Pitot:	psi
Solid shelving:	☐Yes	☐No	Date:	
Flammable/ combustible liquids	☐Yes	☐No	Location:	
Other storage:	☐Yes	☐No	Location of aux/low point drains:	
Hazardous materials:	☐Yes	☐No		
Idle pallets:	☐Yes	☐No		
Antifreeze systems	☐Yes	☐No		
Location:			Original main drain test results:	
Dry or aux systems	☐Yes	☐No	Static:	psi
Location:			Residual:	psi

Name of contractor or designer:

Address:

Phone:

C. SIGNS SHALL BE RED WITH WHITE LETTERING.

D. SIGNS SHALL BE CONSTRUCTED OF CORROSION RESISTANT METAL.

SYSTEM IDENTIFICATION SIGNS
NTS

2113–250

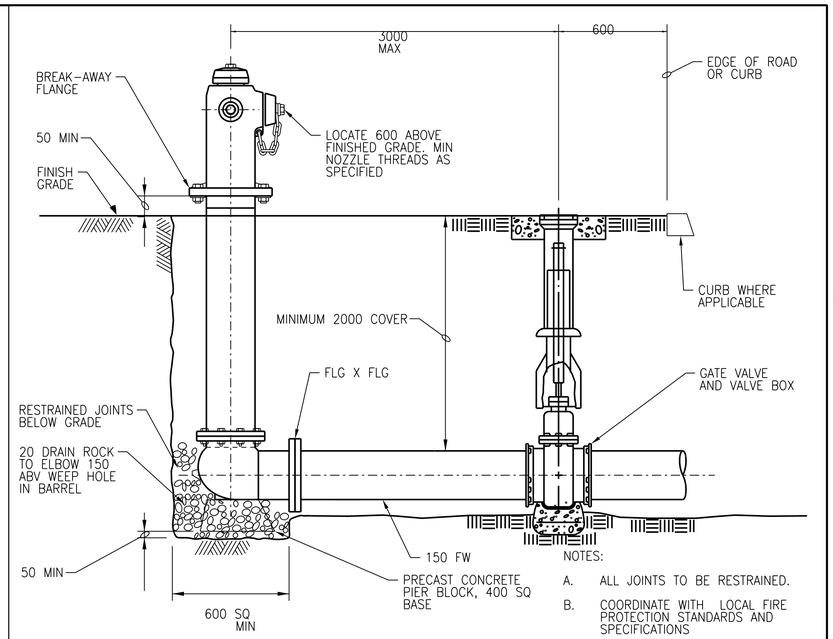

NOTES:

A. ALL JOINTS TO BE RESTRAINED.

B. COORDINATE WITH LOCAL FIRE PROTECTION STANDARDS AND SPECIFICATIONS

C. PROVIDE BOLLARDS, SIMILAR AS SHOWN IN PIV DETAIL THIS SHEET WHERE REQUIRED

FIRE HYDRANT
NTS

2111–110

©CH2M HILL 2017. ALL RIGHTS RESERVED.

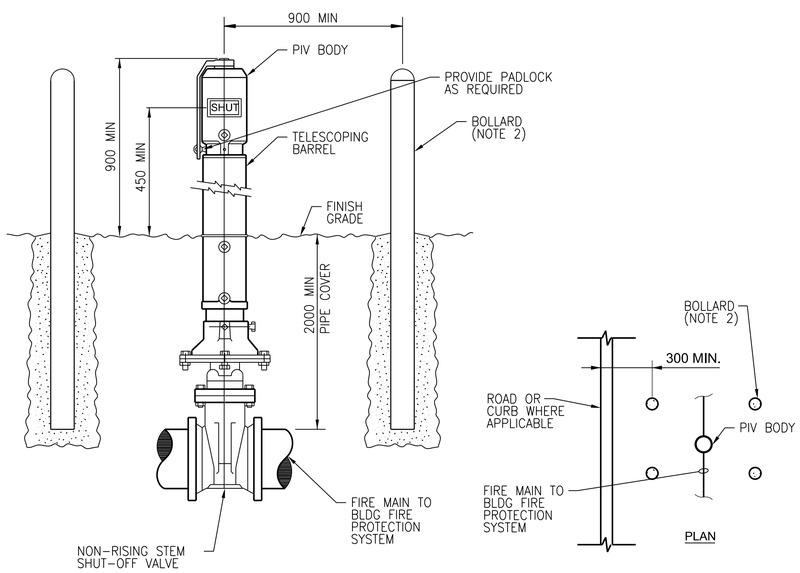

NOTE:

1. PROVIDE PADLOCK KEYED TO BASE STANDARDS AS REQUIRED.
2. SEE DETAIL A5/A–806A FOR EXTERIOR BOLLARD DESIGN.

POST INDICATOR VALVE (PIV)
NTS

2113–150

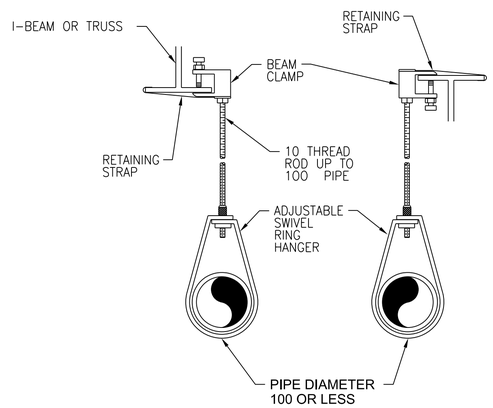

NOTE:
A. LOAD NOT TO EXCEED 400 POUNDS

PIPE HANGER W/RING
NTS

2113–550

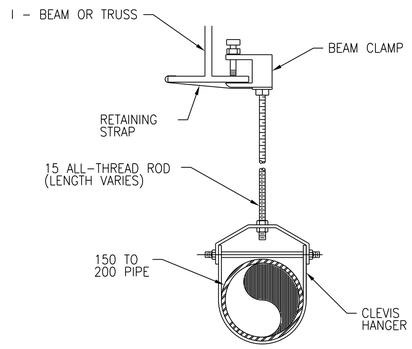

NOTE:
A. LOAD NOT TO EXCEED 400 POUNDS
B. MAXIMUM HANGAR SPACING FOR STEEL PIPE SIZES 50 AND UP IS 4500.

PIPE HANGER WITH CLEVIS
NTS

2113–551

APEGM
Certificate of Authorization
CH2M HILL Canada Ltd.
No. 1441

NO.	REVISIONS	DATE	DESIGN	CHECK
00	ISSUED FOR CONSTRUCTION – 976–2016	2017/04/05	B.S.	J.C.

CH2MHILL. SNC·LAVALIN KGS GROUP

DESIGNED BY: C. OSBERG	CHECKED BY: T. TRAN
DRAWN BY: W. SHANNON	APPROVED BY: H.T. FREIHAMMER
SCALE: NTS	ISSUED FOR CONSTRUCTION BY: J. SHUMKA
DATE: 2017/04/05	DATE: 2017/04/05
CONSULTANT NO.: 474248	

ENGINEER'S SEAL
PROVINCE OF MANITOBA T.T. TRAN Member 40578 REGISTERED PROFESSIONAL ENGINEER
T.T. Apr 19/17.

Winnipeg
THE CITY OF WINNIPEG
WATER AND WASTE DEPARTMENT

SOUTH END WATER POLLUTION CONTROL CENTRE
SEWPCC UPGRADING/EXPANSION PROJECT
MECHANICAL
FIRE PROTECTION
STANDARD DETAILS (1)

CITY DRAWING NUMBER	SHEET	REV.	SIZE
1–0102–MDTL–A011		00	A1