A1 SIZE – 594mm x 841mm

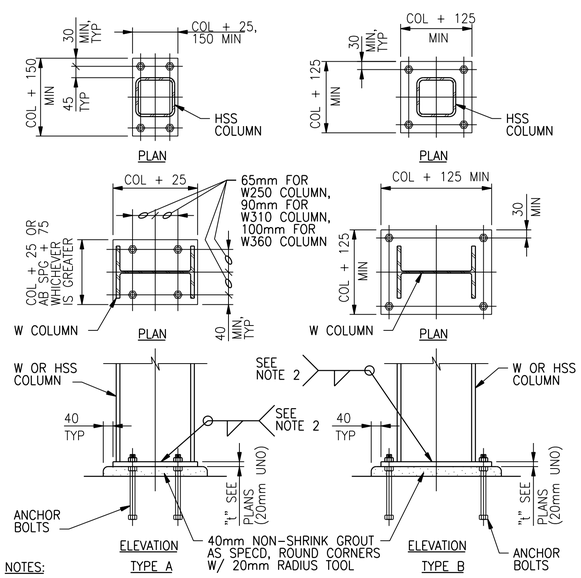

NOTES:

1. UNLESS OTHERWISE NOTED, ANCHOR BOLTS SHALL BE 20mm DIA x REQUIRED WITH LEVELING NUTS AND 300mm MINIMUM EMBED AND BASEPLATES SHALL BE CENTERED ON COLUMN.
2. WELD SIZE SHALL BE DETERMINED BY THE THICKEST MEMBER JOINED; MINIMUM WELD SIZE SHALL BE 5mm FILLET FOR MATERIAL THICKNESSES UP TO AND INCLUDING 15mm, 6mm FILLET FOR THICKNESSES OVER 15mm TO 20mm, AND 8mm FILLET FOR MATERIAL THICKNESSES OVER 20mm. ALL WELDS SHALL BE SINGLE-PASS WELDS.

COLUMN BASE-STEEL

NTS

0512-001

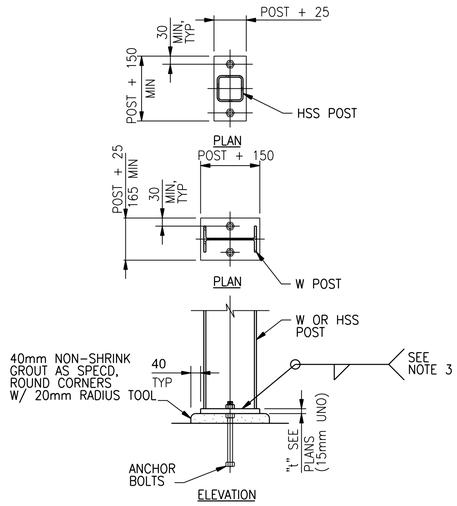

NOTES:

1. UNLESS OTHERWISE NOTED, ANCHOR BOLTS SHALL BE 20mm DIA x REQUIRED WITH LEVELING NUTS AND 300mm MINIMUM EMBED AND BASEPLATES SHALL BE CENTERED ON POSTS.
2. USE OF 2 – BOLT STEEL POST BASEPLATE ANCHORAGE DETAIL SHOWN SHALL BE LIMITED TO STEEL SUPPORT MEMBERS WEIGHING LESS THAN 135 kg IN ACCORDANCE WITH OSHA STANDARDS.
3. WELD SIZE SHALL BE DETERMINED BY THE THICKEST MEMBER JOINED; MINIMUM WELD SIZE SHALL BE 5mm FILLET FOR MATERIAL THICKNESSES UP TO AND INCLUDING 15mm, 6mm FILLET FOR THICKNESSES OVER 15mm TO 20mm, AND 8mm FILLET FOR MATERIAL THICKNESSES OVER 20mm. ALL WELDS SHALL BE SINGLE-PASS WELDS.

POST BASE – STEEL

NTS

0512-002

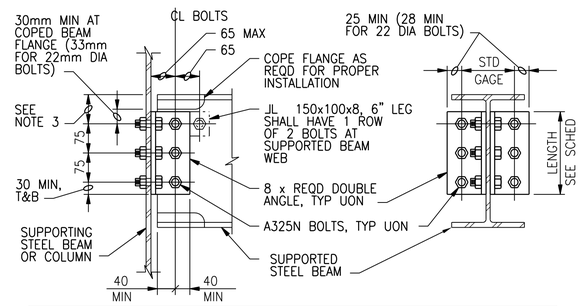

NOMINAL BEAM DEPTH, mm	ROWS OF BOLTS	BOLT DIA, mm	DOUBLE ANGLE, LENGTH, mm	COMMENTS
920	10	22	750	ANGLE THK = 10
840	9	22	675	ANGLE THK = 10
760	8	22	600	ANGLE THK = 10
690	7	20	520	-
610	6	20	445	-
530	5	20	365	-
410-460	4	20	290	-
310-380	3	20	215	-
200-250	2	20	140	-
150	1	20	75	JL 150x100x8
100	1	20	65	JL 150x100x8

NOTES

1. ALL BEAM FRAMING CONNECTIONS SHALL CONFORM TO THIS DETAIL UNLESS SPECIFICALLY NOTED OTHERWISE OR APPROVED IN WRITING BY THE ENGINEER.
2. PROVIDE ADDITIONAL 40mm LENGTH TO DOUBLE ANGLE FOR STAGGERED BOLT CONNECTIONS WHEN REQUIRED OR USED.
3. DIMENSION SHALL BE 75mm UNLESS OTHERWISE REQUIRED FOR PROPER FABRICATION.

TYPICAL BEAM CONNECTION – STEEL

NTS

0512-020

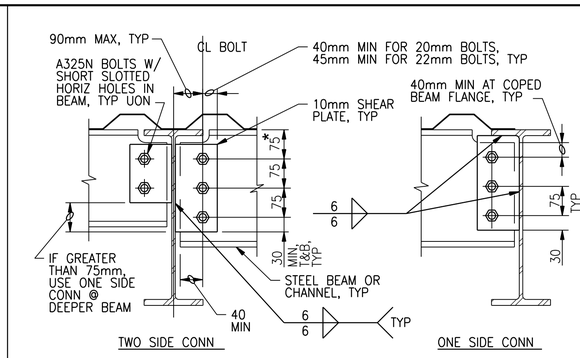

NOMINAL BEAM DEPTH, mm	ROWS OF BOLTS	BOLT DIA, mm	LENGTH OF SHEAR PLATE
690	8	22	610
610	7	20	520
530	6	20	445
460	5	20	370
410	4	20	290
310-380	3	20	215
200-250	2	20	140

NOTES:

1. THIS DETAIL APPLIES ONLY WHERE SPECIFICALLY SHOWN ON DRAWINGS.
2. CONNECTION DETAIL SHOWN APPLICABLE ONLY TO BEAMS BRACED BY METAL DECK (COMPOSITE OR NON-COMPOSITE); FOR OTHER BEAM FRAMING CONDITIONS, SEE DETAIL 0512-020
3. (*) DIMENSION SHALL BE 75mm UNLESS OTHERWISE REQUIRED FOR PROPER FABRICATION.

BEAM SINGLE PLATE SHEAR CONNECTION – STEEL

NTS

0512-022

©CH2M HILL 2017. ALL RIGHTS RESERVED.

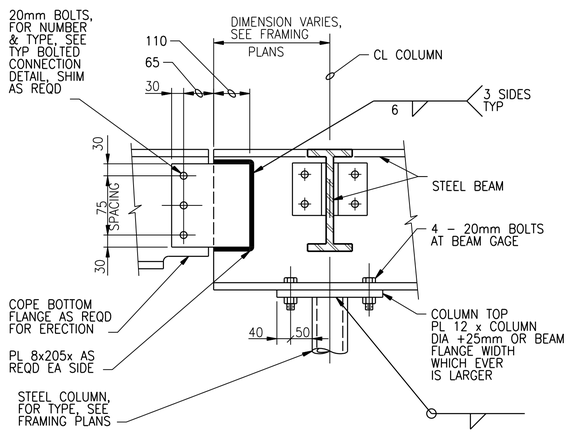

BEAM COLUMN CONNECTION – STEEL

NTS

0512-040

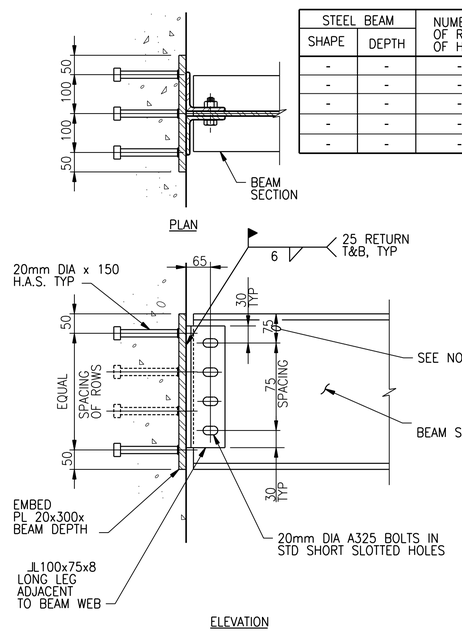

STEEL BEAM SHAPE	STEEL BEAM DEPTH	NUMBER OF ROWS OF H.A.S.	NUMBER OF ROWS OF BOLTS
-	-	-	-
-	-	-	-
-	-	-	-
-	-	-	-
-	-	-	-

NOTE:

65mm FOR 200mm BEAM DEPTH.

EMBEDDED CONNECTION – STEEL

NTS

0512-055

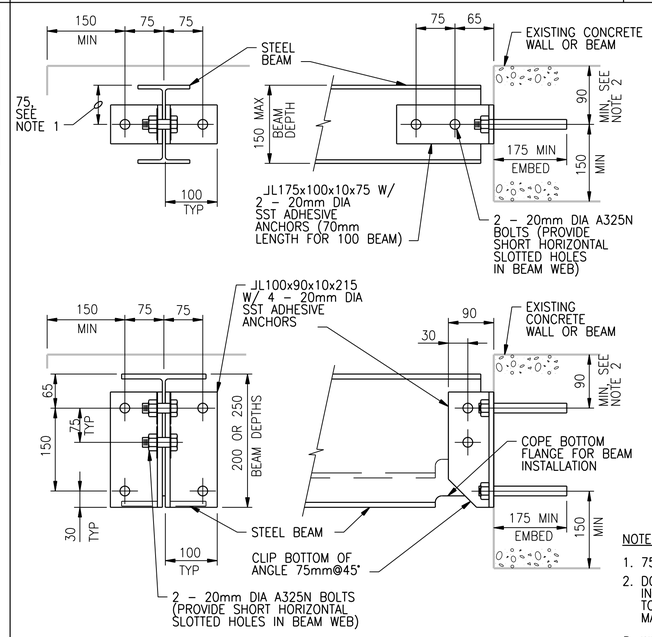

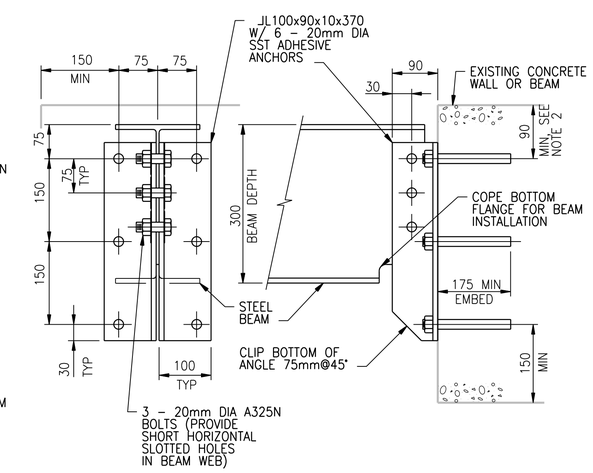

NOTES:

1. 75mm DIMENSION TYPICAL EXCEPT 65mm FOR 125mm BEAMS AND 50mm FOR 100mm BEAMS.
2. DO NOT CUT EXISTING CONCRETE BEAM TOP REINFORCING DURING DRILL-IN ANCHOR INSTALLATION. FIELD LOCATE BEAM REINFORCING PRIOR TO FABRICATION. ADD LENGTH TO CLIP ANGLES AS REQUIRED TO LOWER ANCHORS TO CLEAR REINFORCING WHILE MAINTAINING SPACING AND EDGE DISTANCE AS SHOWN.
3. WHERE BOTH ENDS OF BEAM ARE ATTACHED TO A WALL, PROVIDE LONG HORIZONTALLY SLOTTED HOLES IN BEAM WEB AT ONE END. TIGHTEN NUTS SNUG TIGHT, BACK OFF 1/2 TURN, AND LOCK WITH DOUBLE NUT.

BEAM/WALLCONNECTION – STEEL

NTS

0512-056

APEGM
Certificate of Authorization
CH2M HILL Canada Ltd.
No. 1441

NO.	REVISIONS	DATE	DESIGN	CHECK
02	ISSUED FOR CONSTRUCTION – 976-2016	2017/04/05	G.O.	J.C.
01	ISSUED FOR CONSTR – B.O. 899-2015	04/2016	G.O.	J.C.
00	ISSUED FOR TENDER – B.O. 899-2015	01/2015	G.O.	J.C.

CH2MHILL. SNC·LAVALIN KGS GROUP

DESIGNED BY: J. THANNICKAL
CHECKED BY: E. LUI
DRAWN BY: G. OMORI
APPROVED BY: H.T. FREIHAMMER
SCALE: NTS
ISSUED FOR CONSTRUCTION BY: J. SHUMKA
DATE: 2017/04/05
DATE: 2017/04/05
CONSULTANT NO.: 474248

ENGINEER'S SEAL
APR 5, 2017
PROVINCE OF MANITOBA
E. LUI
Member 37003
REGISTERED PROFESSIONAL ENGINEER

THE CITY OF WINNIPEG
WATER AND WASTE DEPARTMENT

SOUTH END WATER POLLUTION CONTROL CENTRE
SEWPCC UPGRADING/EXPANSION PROJECT
STRUCTURAL
STANDARD DETAILS (15)

CITY DRAWING NUMBER	SHEET	REV.	SIZE
1-0102-SDTL-A016		02	A1

PLOT DATE: 2017\03\29
FILE NAME: 1-0102-SDTL-A016.dgn