A1 SIZE – 594mm x 841mm

FUSE SCHEDULE			
TB	IDENTIFIER	SIZE	RATED CURRENT
TB21	F021	5x20mm	1.6A FA
	F022	5x20mm	1.6A FA
	F023	5x20mm	1.6A FA
	F024	5x20mm	1.6A FA
	F025	5x20mm	1.6A FA
TB23	F221	5x20mm	1.6A FA
	F222	5x20mm	1.6A FA
	F223	5x20mm	1.6A FA
	F224	5x20mm	1A FA
	F225	5x20mm	1.6A FA
	F226	5x20mm	1.6A FA

NOTES
FA = FAST ACTING

POWER CONSUMPTION SCHEDULE AT 24 VDC			
LOAD	RM01 CURRENT (mA)	RM02 CURRENT (mA)	NOTES
NSW-K910	400	400	1
NSW-K920	460	460	1
NSW-K921	400	400	1
LED24V15	–	500	1
TOTAL	1260	1760	

NOTES
1. BASED ON DATA SHEET.

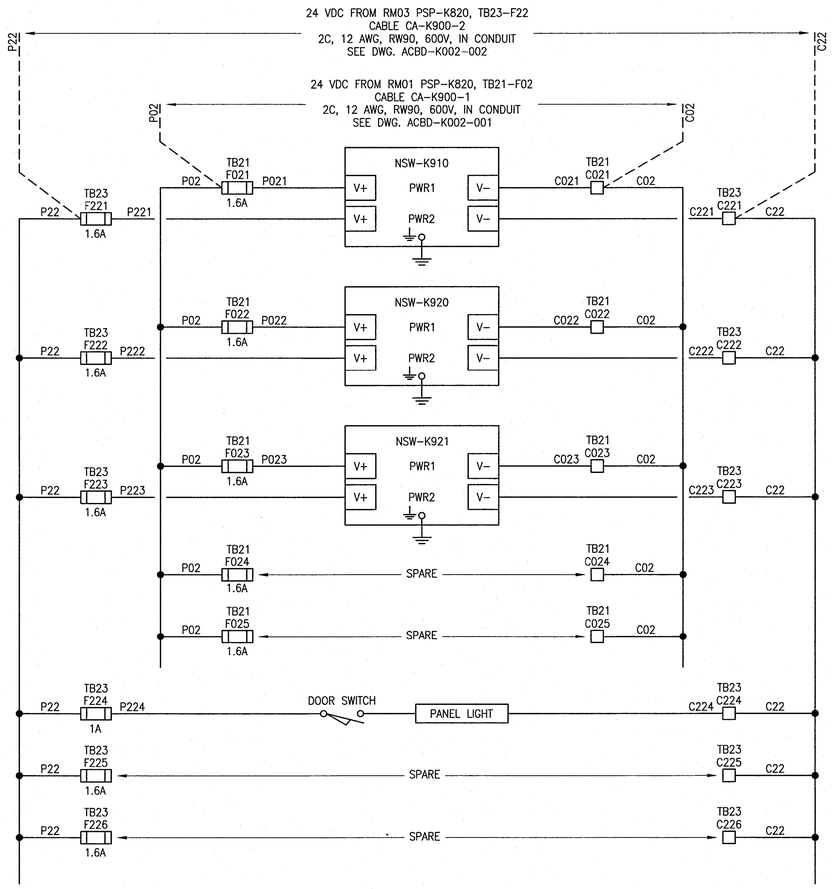

TERMINAL LAYOUT TB21

F021
F022
F023
F024
F025
C021
C022
C023
C024
C025

TERMINAL LAYOUT TB23

F221
F222
F223
F224
F225
F226
C221
C222
C223
C224
C225
C226

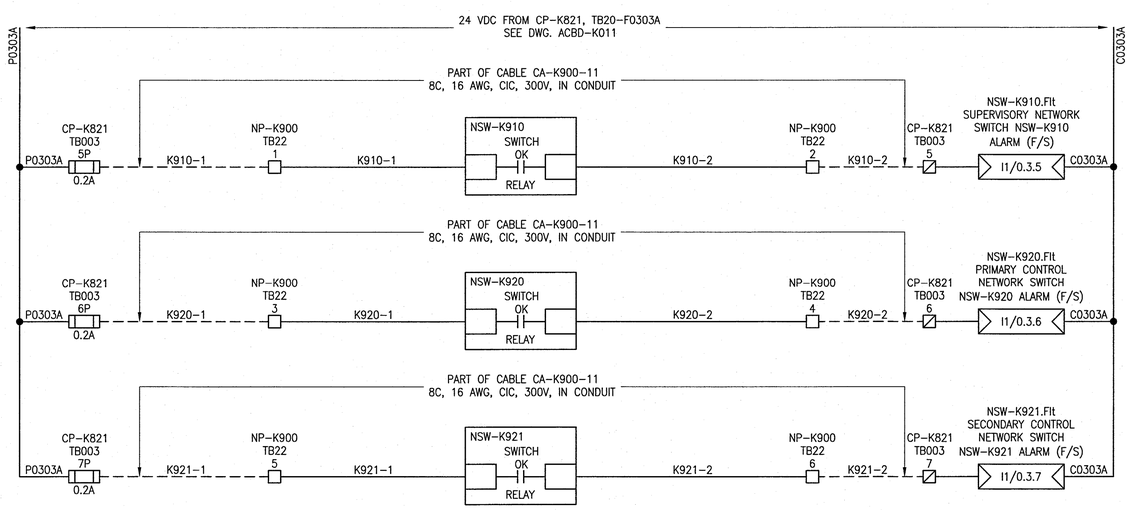

TERMINAL LAYOUT TB22

1
2
3
4
5
6

LEGEND:

- EQUIPMENT GROUND
- NP-K900 TERMINAL
- CP-K821 TERMINAL

REFERENCE DRAWINGS	DESCRIPTION
–	–

APEGM Certificate of Authorization
SNC-Lavalin Inc.
No. 4489

NO.	REVISIONS	DATE	DESIGN	CHECK
00	ISSUED FOR CONSTRUCTION – 976-2016	2017/04/05	MW	PC

CH2MHILL. SNC·LAVALIN KGS GROUP

DESIGNED BY: M. WANG	CHECKED BY: P. CHICATUN
DRAWN BY: M. WANG	APPROVED BY: E. RYCZKOWSKI
SCALE: NTS	ISSUED FOR CONSTRUCTION BY: J. SHUMKA
DATE: 2015/02/05	DATE: 2017/04/05
CONSULTANT NO.: 474248	

ENGINEER'S SEAL
PROVINCE OF MANITOBA
CHICATUN
Member
30307
REGISTERED PROFESSIONAL ENGINEER
APR. 4 2017
REV.00

THE CITY OF WINNIPEG
WATER AND WASTE DEPARTMENT

SOUTH END WATER POLLUTION CONTROL CENTRE
SEWPCC UPGRADING/EXPANSION PROJECT
AUTOMATION – POWER DISTRIBUTION SCHEMATIC
HIGH RATE CLARIFICATION BUILDING
NP-K900 NETWORK CABINET

CITY DRAWING NUMBER	SHEET	REV.	SIZE
1-0102-ACBD-K902	001	00	A1

LAST SAVE: 2017/04/01 – 2:14pm
PATH: C:\pw_workdir\ch2mhill_wsg\sh04326A\d0356391\1-0102-ACBD-K902.dwg

PLOT DATE: Apr 01, 2017 – 2:14pm

FILE NAME:1-0102-ACBD-K902.dwg