A1 SIZE – 594mm x 841mm

©CH2M HILL 2017. ALL RIGHTS RESERVED.

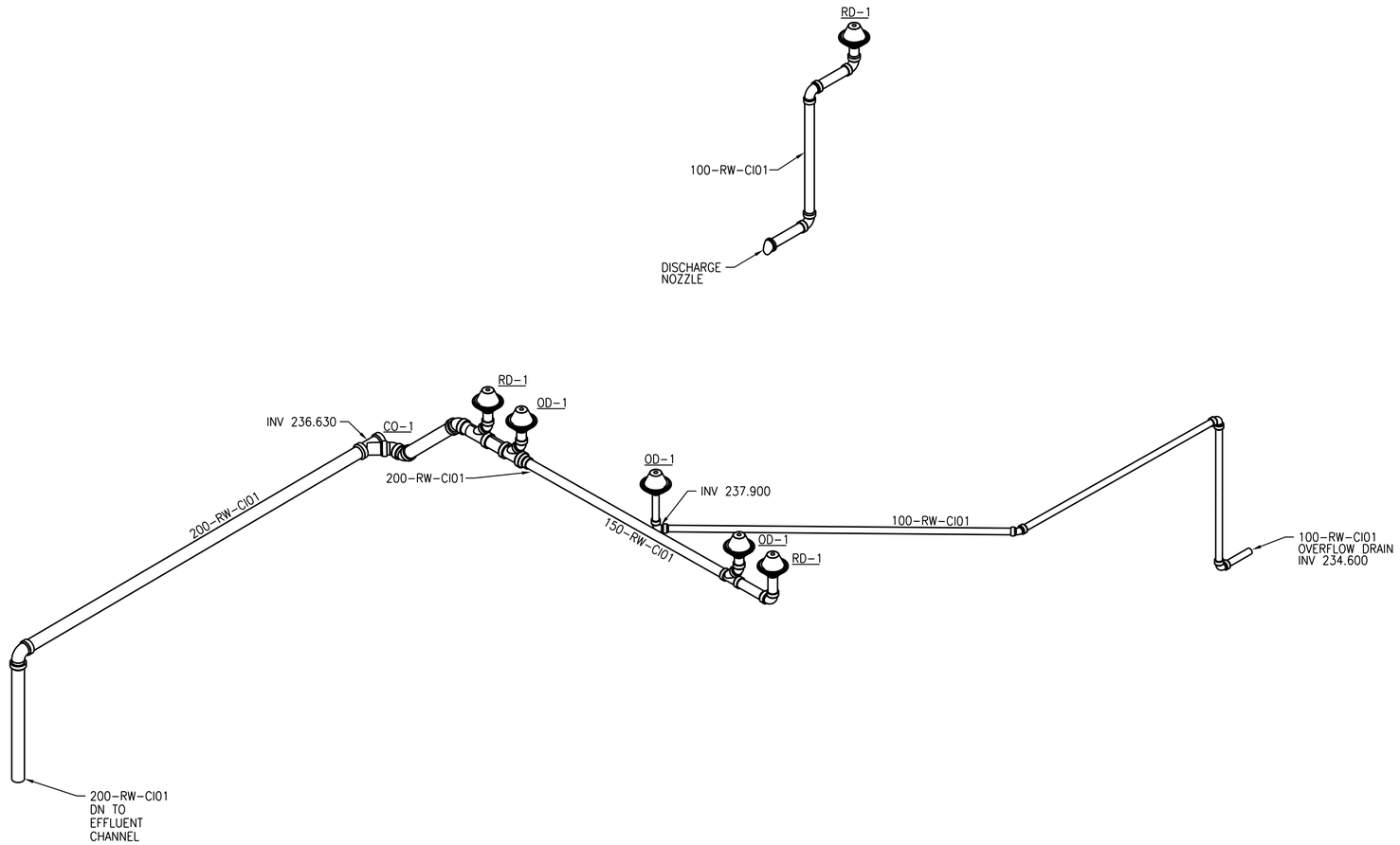

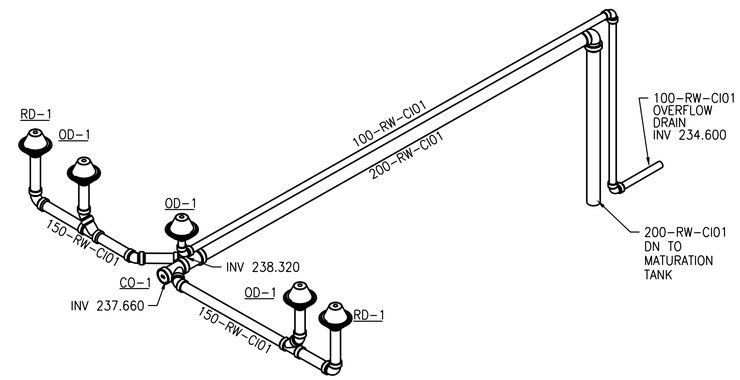

ROOF DRAIN ISOMETRIC

NTS

APEGM
Certificate of Authorization
CH2M HILL Canada Ltd.
No. 1441

NO.	REVISIONS	DATE	DESIGN	CHECK
00	ISSUED FOR CONSTRUCTION – 976-2016	2017/04/05	R.A.	J.C.

CH2MHILL. SNC·LAVALIN KGS GROUP

DESIGNED BY: T. TRAN	CHECKED BY: D. CUDDINGTON
DRAWN BY: R. ARCHER	APPROVED BY: H.T. FRIEHAMMER
SCALE: NTS	ISSUED FOR CONSTRUCTION BY: J. SHUMKA
DATE: 2017/04/05	DATE: 2017/04/05
CONSULTANT NO.: 474248	

ENGINEER'S SEAL
PROVINCE OF MANITOBA
T.T. TRAN
Member
40578
REGISTERED PROFESSIONAL ENGINEER
Apr 19/17.

Winnipeg
THE CITY OF WINNIPEG
WATER AND WASTE DEPARTMENT

SOUTH END WATER POLLUTION CONTROL CENTRE
SEWPCC UPGRADING/EXPANSION PROJECT
MECHANICAL
HIGH RATE CLARIFICATION BUILDING
PLUMBING – ROOF DRAINAGE ISOMETRIC

CITY DRAWING NUMBER	SHEET	REV.	SIZE
1-0102-MISO-K502	001	00	A1

PLOT DATE: 2017\03\31

FILE NAME: 1-0102-MISO-K502.dgn