A1 SIZE – 594mm x 841mm

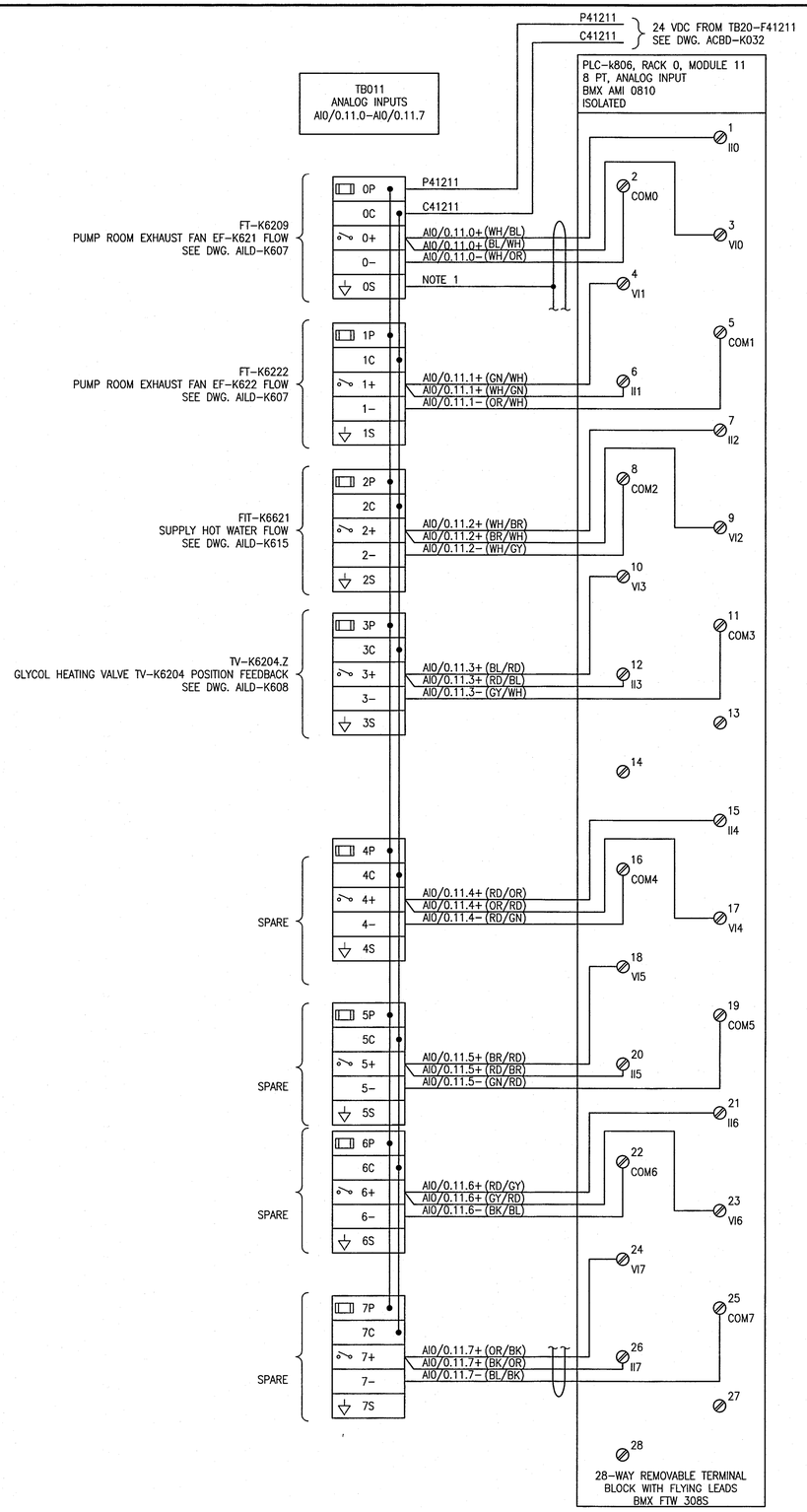

FUSE SCHEDULE

TB	IDENTIFIER	SIZE	RATED CURRENT (A) FA
TB011	0P	5x20mm	1
	1P	5x20mm	1
	2P	5x20mm	1
	3P	5x20mm	1
	4P	5x20mm	1
	5P	5x20mm	1
	6P	5x20mm	1
	7P	5x20mm	1

NOTES:

1. CONNECT FLYING LEADS CABLE OVERALL SHIELD TO TERMINAL 0S.

LEGEND:

ISOLATED GROUND

REFERENCE DRAWINGS	DESCRIPTION
–	–

APEGM Certificate of Authorization
SNC-Lavalin Inc.
No. 4489

NO.	REVISIONS	DATE	DESIGN	CHECK
00	ISSUED FOR CONSTRUCTION – 976–2016	2017/04/05	MW	PC

CH2MHILL. SNC·LAVALIN KGS GROUP

DESIGNED BY: M. WANG
CHECKED BY: P. CHICATUN
DRAWN BY: M. WANG
APPROVED BY: E. RYCZKOWSKI
SCALE: NTS
ISSUED FOR CONSTRUCTION BY: J. SHUMKA
DATE: 2016/11/20
DATE: 2017/04/05
CONSULTANT NO.: 474248

ENGINEER'S SEAL
PROVINCE OF MANITOBA
CHICATUN
Member
30307
REGISTERED PROFESSIONAL ENGINEER
APR. 4, 2017
REV. 00

Winnipeg
THE CITY OF WINNIPEG
WATER AND WASTE DEPARTMENT

SOUTH END WATER POLLUTION CONTROL CENTRE
SEWPCC UPGRADING/EXPANSION PROJECT
AUTOMATION – WIRING DIAGRAM
HIGH RATE CLARIFICATION BUILDING
CP–K826, PLC–K806 – ANALOG INPUTS

CITY DRAWING NUMBER	SHEET	REV.	SIZE
1–0102–ACBD–K035	003	00	A1

PLOT DATE: Apr 01, 2017 – 10:25am
FILE NAME: 1–0102–ACBD–K035–003.dwg

LAST SAVE: 2017/04/01 – 10:25am
PATH: C:\pw_workdir\ch2mhill_wbg\sh043264\a0356273\1–0102–ACBD–K035–003.dwg