A1 SIZE – 594mm x 841mm

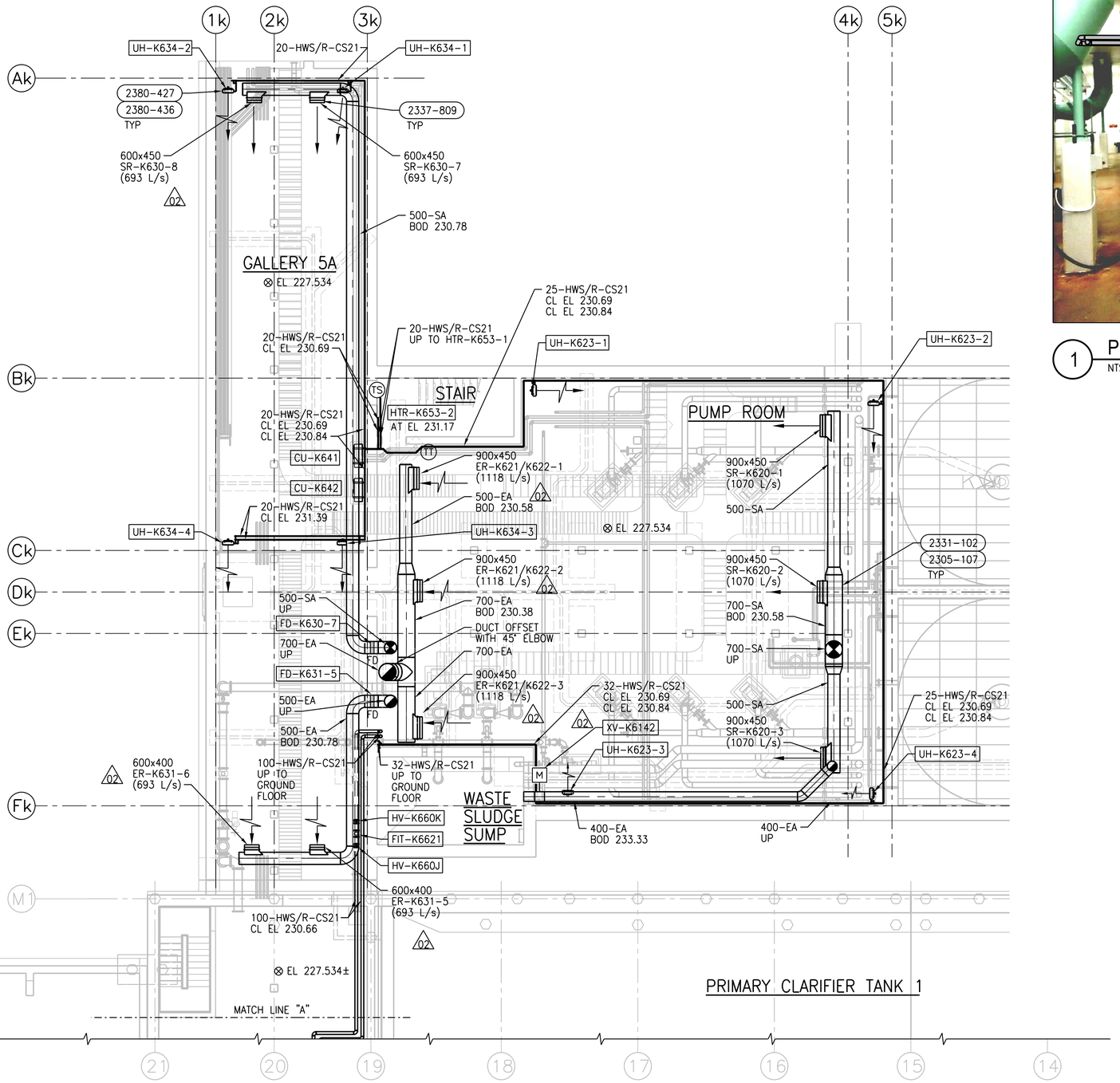

BASEMENT PLAN
1:100

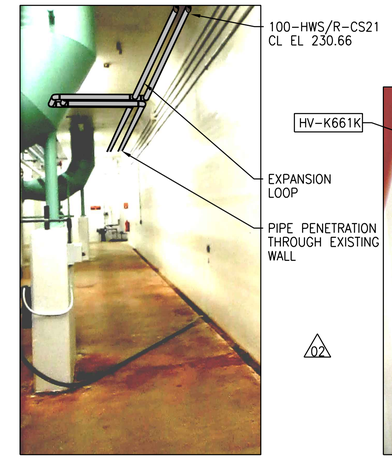

1 PHOTO
NTS

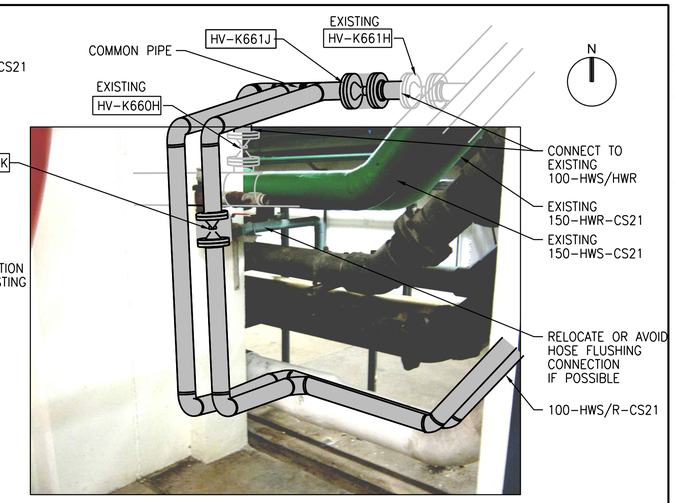

2 PHOTO
NTS

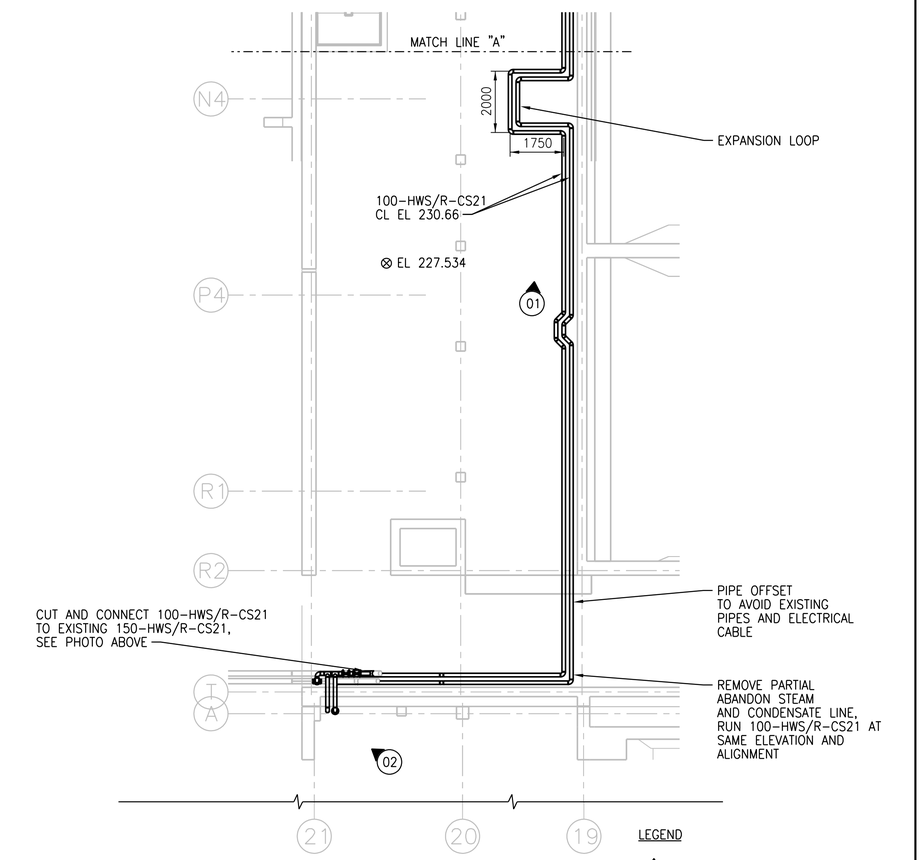

NOTES:

1. REFER TO DUCT SCHEDULE FOR MATERIAL 02
2. FIELD RUN REFRIGERANT PIPES (CU-02) FROM ACC UNITS IN ELECTRICAL ROOM TO CONDENSERS IN BASEMENT GALLERY 5A

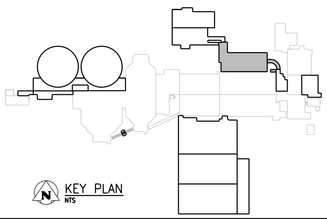

KEY PLAN
NTS

APEGM
Certificate of Authorization
CH2M HILL Canada Ltd.
No. 1441

NO.	REVISIONS	DATE	DESIGN	CHECK
03	ISSUED FOR CONSTRUCTION – 976-2016	2017/04/05	K.F.	J.C.
02	ISSUED FOR 90% PRELIMINARY REVIEW	11/2015	K.F.	J.C.
01	ISSUED FOR CONSTRUCTION	10/2015	K.F.	J.C.
00	ISSUED FOR ADDENDUM NO. 2	09/2015	K.F.	J.C.

CH2MHILL
SNC·LAVALIN
KGS GROUP

DESIGNED BY: R. BLACKWOOD	CHECKED BY: T. TRAN
DRAWN BY: K. FONG	APPROVED BY: H.T. FREIHAMMER
SCALE: 1:100	ISSUED FOR CONSTRUCTION BY: J. SHUMKA
DATE: 2017/04/05	DATE: 2017/04/05
CONSULTANT NO.: 474248	

ENGINEER'S SEAL
April 6, 2017
PROVINCE OF MANITOBA
R.P.C. BLACKWOOD
Member 40579
REGISTERED PROFESSIONAL ENGINEER

Winnipeg
THE CITY OF WINNIPEG
WATER AND WASTE DEPARTMENT

SOUTH END WATER POLLUTION CONTROL CENTRE
SEWPCC UPGRADING/EXPANSION PROJECT
MECHANICAL
HIGH RATE CLARIFICATION BUILDING
HVAC – BASEMENT PLANS AND PHOTOS

CITY DRAWING NUMBER	SHEET	REV.	SIZE
1-0102-MGAD-K601		03	A1

PLOT DATE: 2017\04\02
FILE NAME:

©CH2M HILL 2017. ALL RIGHTS RESERVED.