A1 SIZE – 594mm x 841mm

SPECIFIC NOTES:

1. INSTALL HAZARDOUS CONDUIT SEAL WHERE CONDUIT ENTERS AND LEAVES THE HAZARDOUS AREA.

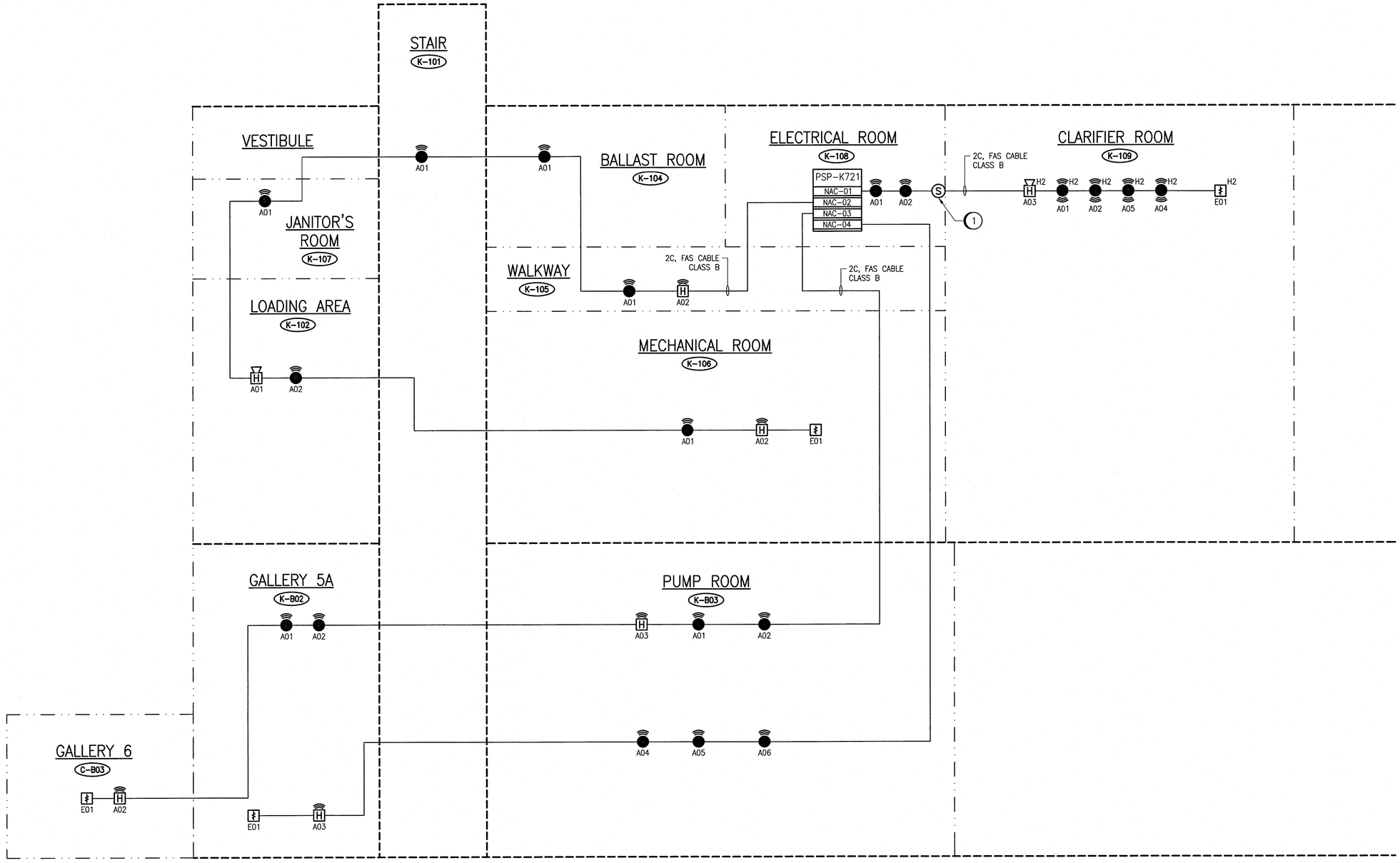

GENERAL NOTE:

1. DEVICE TAGS ARE SHOWN IN SHORTHAND NOTATION. FULL DEVICE TAG FORMAT IS FAS–K–xxx–yyy, WHERE xxx IS THE ROOM NUMBER, AND yyy IS THE DEVICE IDENTIFIER. REFER TO DRAWING 1–0102–EFAS–A001.
2. ALL REQUIRED HAZARDOUS CONDUIT SEALS ARE NOT NECESSARILY SHOWN. INSTALL AS PER CEC REQUIREMENTS.
3. UTILIZE A MINIMUM WIRE SIZE FOR NAC CIRCUITS OF 12 AWG, OR LARGER AS REQUIRED.

REFERENCE DRAWINGS	DESCRIPTION
1–0102–EFAS–K002	FIRE ALARM LAYOUT, GROUND PLAN
1–0102–EFAS–K001	FIRE ALARM LAYOUT, BASEMENT PLAN
1–0102–EFAS–A001	FIRE ALARM UPGRADES, LEGEND AND DETAILS

APEGM Certificate of Authorization
SNC-Lavalin Inc.
No. 4489

NO.	REVISIONS	DATE	DESIGN	CHECK
00	ISSUED FOR CONSTRUCTION – 976–2016	2017/04/05	EFB	EFB

CH2MHILL. SNC·LAVALIN KGS GROUP

DESIGNED BY: E. BOHNCKE
CHECKED BY: E. RYCZKOWSKI
DRAWN BY: M. WANG
APPROVED BY: D. BECKER
SCALE: NTS
ISSUED FOR CONSTRUCTION BY: J. SHUMKA
DATE: 2015/01/27
DATE: 2017/04/05
CONSULTANT NO.: 474248

ENGINEER'S SEAL
PROVINCE OF MANITOBA
D.E. BECKER
Member 23646
REGISTERED PROFESSIONAL ENGINEER
April 5 2017

Winnipeg
THE CITY OF WINNIPEG
WATER AND WASTE DEPARTMENT

SOUTH END WATER POLLUTION CONTROL CENTRE
SEWPCC UPGRADING/EXPANSION PROJECT
ELECTRICAL – FIRE ALARM
HIGH RATE CLARIFICATION BUILDING
RISER DIAGRAM, NOTIFICATION CIRCUITS

CITY DRAWING NUMBER	SHEET	REV.	SIZE
1–0102–EFAS–K004	001	00	A1

LAST SAVE: 2017/03/24 – 9:40am
PATH: C:\DWG\1–0102–EFAS–K004.dwg

PLOT DATE: Mar 24, 2017 – 9:40am
FILE NAME:1–0102–EFAS–K004.dwg