A1 SIZE – 594mm x 841mm

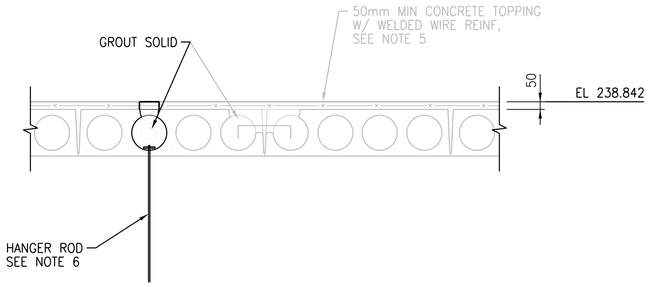

1 DETAIL
1:20
SGAD-K006,
SGAD-K008,
SGAD-K009

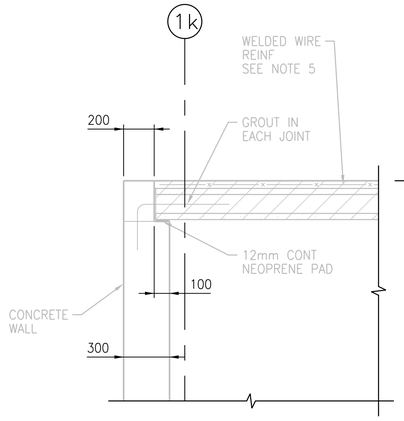

2 DETAIL
1:20
SGAD-K006,
SGAD-K008,
SGAD-K015,
SGAD-K017,
SGAD-K018

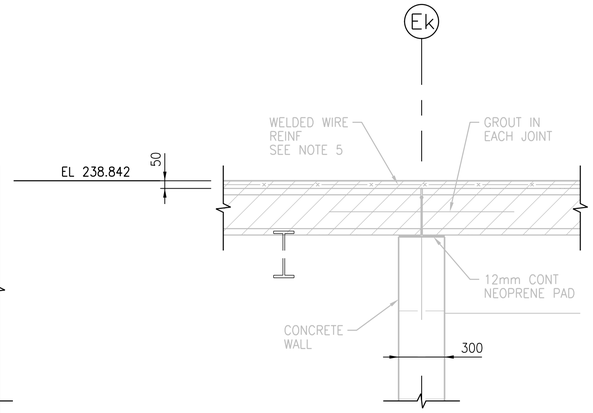

3 DETAIL
1:20
SGAD-K010

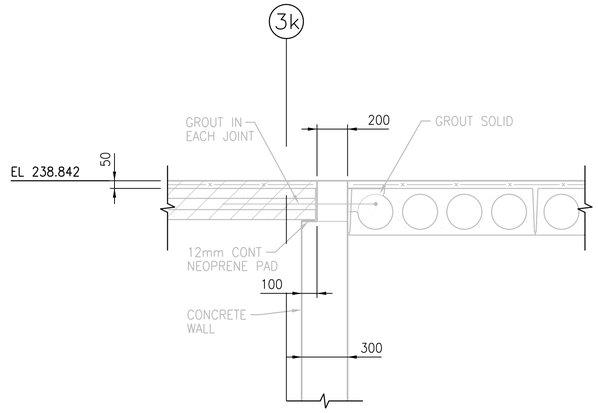

4 DETAIL
1:20
SGAD-K008,
SGAD-K015,
SGAD-K017,
SGAD-K018

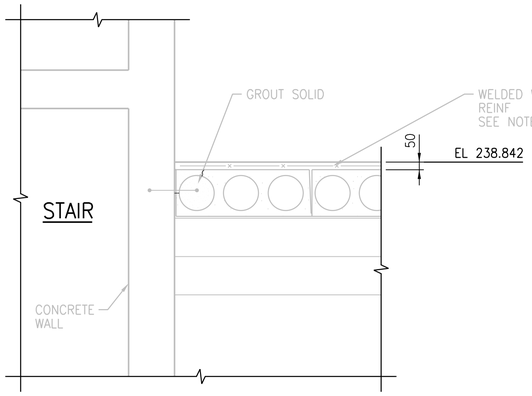

5 DETAIL
1:20
SGAD-K006

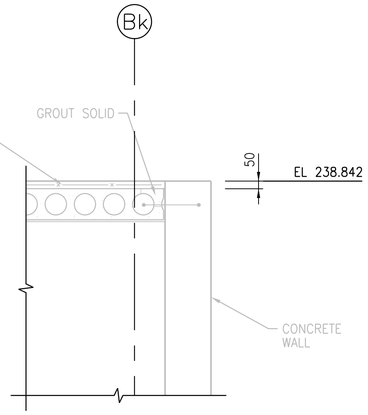

6 DETAIL
1:20
SGAD-K009,
SGAD-K016

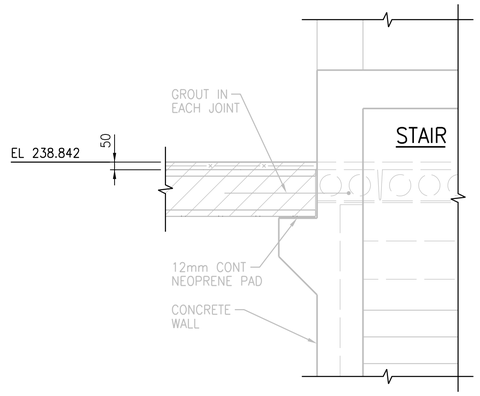

7 DETAIL
1:20
SGAD-K006,
SGAD-K010

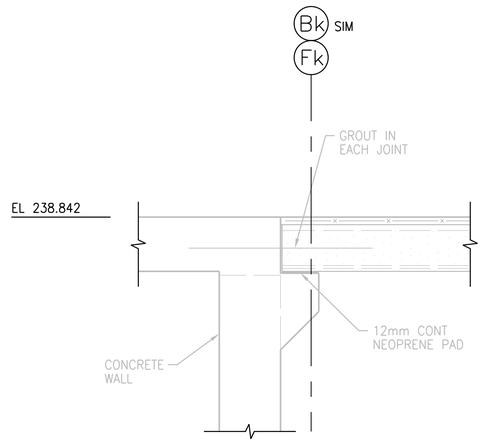

8 DETAIL
1:20
SGAD-K004

NOTES:

1. GENERAL CONCEPT FOR CONNECTIONS SHOWN.
   MANUFACTURER SHALL DESIGN AND PROVIDE ALL CONNECTIONS.
2. PROFESSIONAL ENGINEER FROM PRECAST SUPPLIER TO DESIGN AND PROVIDE
   APPROPRIATE SIZES PER THEIR DESIGN. GIVEN VALUES ARE MINIMUM REQUIREMENTS.
3. COORDINATE FINAL LOCATIONS AND DETAILS WITH CONTRACT ADMINISTRATOR.
4. ALL PLATES, ANGLES, CONNECTIONS, ETC. EXCEPT SST HARDWARE SHALL BE HOT-DIP GALVANIZED.
5. PROVIDE CONCRETE TOPPING MINIMUM 50mm THICK OVER ENTIRE PRECAST FLAT ROOF.
   REINFORCE WITH WELDED WIRE REINFORCEMENT 102 x 102 x MW25.4 x MW25.4.
6. COORDINATE HANGER SUPPORT CONNECTIONS WITH PRECAST MANUFACTURER.
   PORTION OF SUPERIMPOSED DEAD LOAD ALLOWANCE FOR PIPES, DUCTS, TRAYS, ETC. IS 1.0 kPa.

APEGM
Certificate of Authorization
CH2M HILL Canada Ltd.
No. 1441

NO.	REVISIONS	DATE	DESIGN	CHECK
02	ISSUED FOR CONSTRUCTION – 976-2016	2017/04/05	G.O.	J.C.
01	ISSUED FOR CONSTRUCTION	10/2015	G.O.	J.C.
00	ISSUED FOR TENDER	08/2015	G.O.	J.C.

PLOT DATE: 2017\04\02

CH2MHILL
SNC·LAVALIN
KGS GROUP CONSULTING ENGINEERS

DESIGNED BY: E. LUI	CHECKED BY: R. PARIKH
DRAWN BY: G. OMORI	APPROVED BY: H.T. FREIHAMMER
SCALE: AS NOTED	ISSUED FOR CONSTRUCTION BY: J. SHUMKA
DATE: 2017/04/05	DATE: 2017/04/05
CONSULTANT NO.: 474248	

ENGINEER'S SEAL
APR 5, 2017
PROVINCE OF MANITOBA
S.H.E. LUI
Member 37003
REGISTERED PROFESSIONAL ENGINEER

FILE NAME:

Winnipeg
THE CITY OF WINNIPEG
WATER AND WASTE DEPARTMENT

SOUTH END WATER POLLUTION CONTROL CENTRE
SEWPCC UPGRADING/EXPANSION PROJECT
STRUCTURAL
HIGH RATE CLARIFICATION BUILDING
PRECAST HOLLOW CORE ROOF DETAILS

CITY DRAWING NUMBER	SHEET	REV.	SIZE
1-0102-SDTL-K002		02	A1

©CH2M HILL 2017. ALL RIGHTS RESERVED.