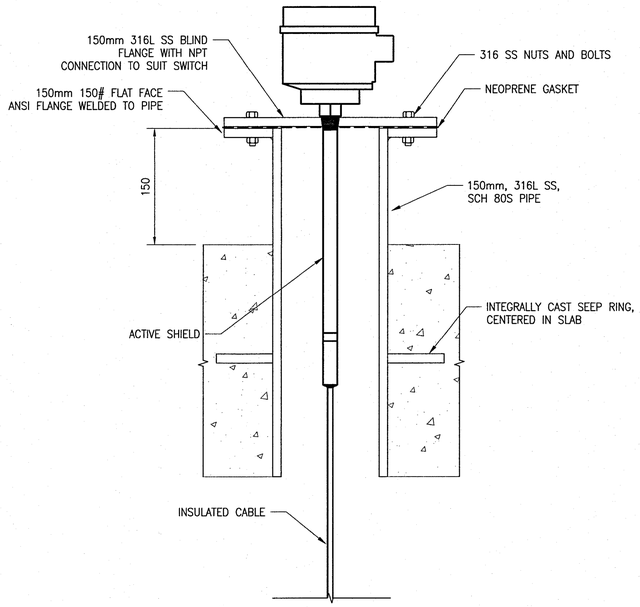

A WASTE SLUDGE SUMP LEVEL SWITCHES
NTS

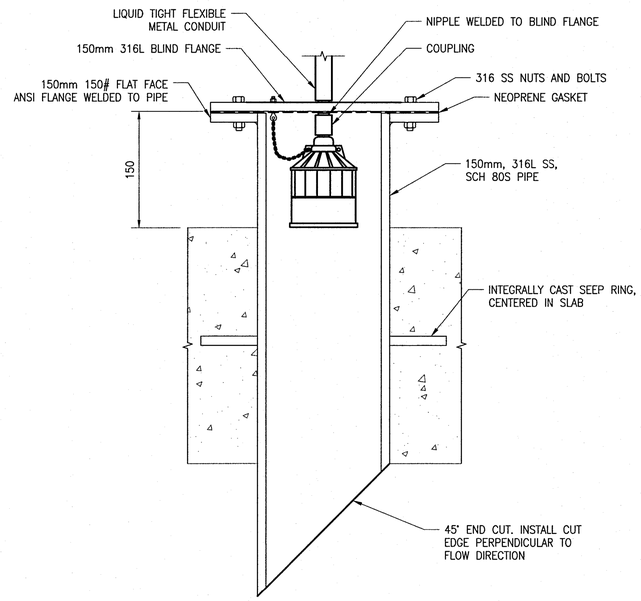

B ULTRASONIC LEVEL SENSOR – FLANGE MOUNT
NTS

APEGM Certificate of Authorization
SNC-Lavalin Inc.
No. 4489

NO.	REVISIONS	DATE	DESIGN	CHECK
02	ISSUED FOR CONSTRUCTION – 976-2016	2017/04/05	TMC	TMC
01	ISSUED FOR CONSTRUCTION	10/2015	TMC	TMC
00	ISSUED FOR ADDENDUM NO. 2	09/2015	TMC	TMC

CH2MHILL. SNC·LAVALIN KGS GROUP

DESIGNED BY: T. CHURCH
CHECKED BY: T. CHURCH
DRAWN BY: S. BOGHOSIAN
APPROVED BY: T. CHURCH
SCALE: NTS
ISSUED FOR CONSTRUCTION BY: J. SHUMKA
DATE: 2015/05/04
DATE: 2017/04/05
CONSULTANT NO.: 474248

ENGINEER'S SEAL
PROVINCE OF MANITOBA
T. M. CHURCH
Member 32682
REGISTERED PROFESSIONAL ENGINEER
Apr. 5, 2017

Winnipeg
THE CITY OF WINNIPEG
WATER AND WASTE DEPARTMENT

SOUTH END WATER POLLUTION CONTROL CENTRE
SEWPCC UPGRADING/EXPANSION PROJECT
AUTOMATION – INSTALLATION DETAILS
HIGH RATE CLARIFICATION BUILDING
LEVEL INSTRUMENTS

CITY DRAWING NUMBER	SHEET	REV.	SIZE
1-0102-ADTL-K001	001	02	A1

PLOT DATE: Apr 03, 2017 – 9:27am
FILE NAME: 1-0102-ADTL-K001.dwg

A1 SIZE – 594mm x 841mm
LAST SAVE: 2017/04/03 – 9:27am
PATH: C:\pw_workdir\ch2mhill_wbg\ve006717\d0356273\1-0102-ADTL-K001.dwg