A1 SIZE – 594mm x 841mm

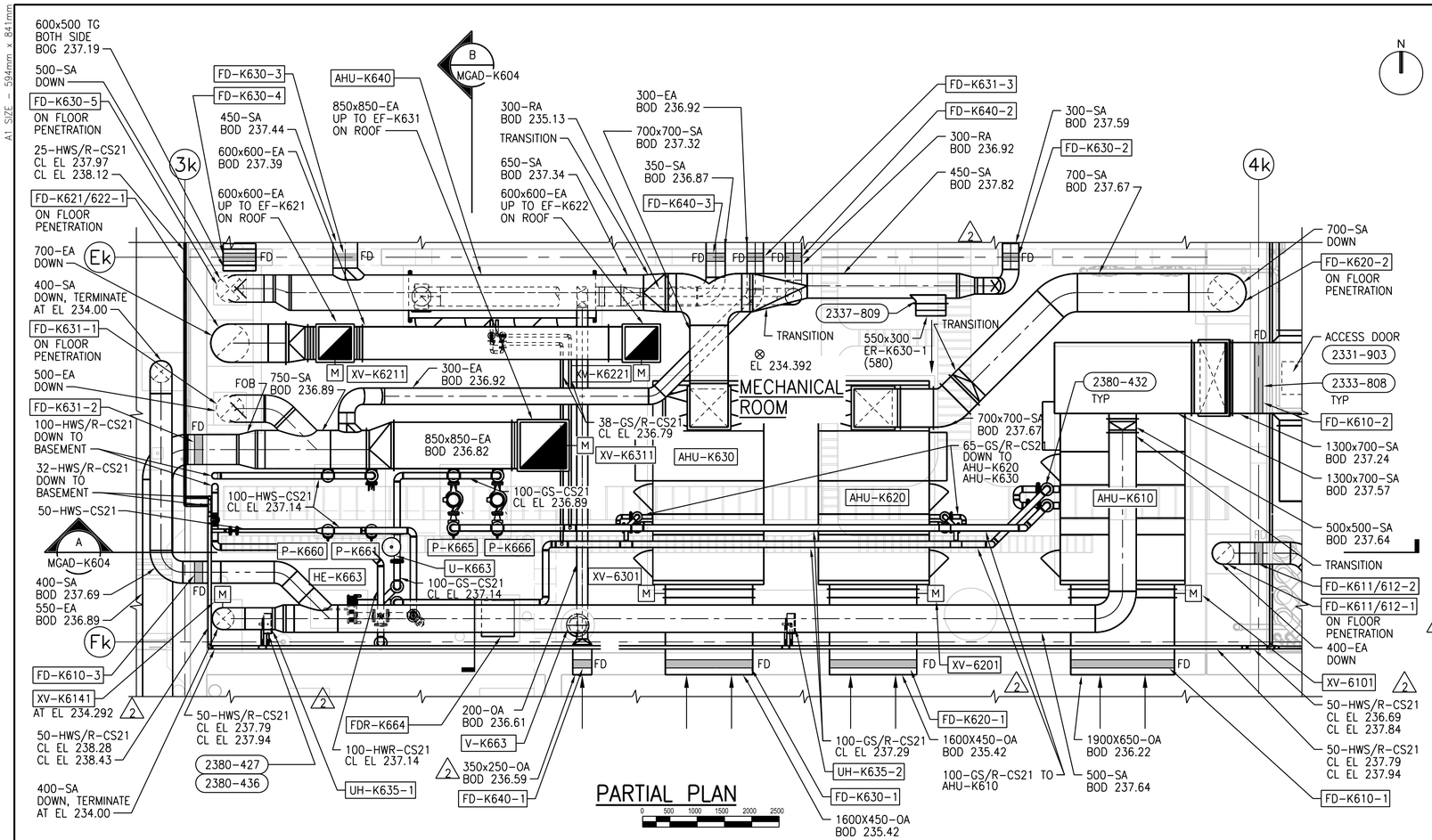

PARTIAL PLAN

0 500 1000 1500 2000 2500

FIRE DAMPER SCHEDULE						
TAG	DUCT SIZE	CONCRETE OPENING	LOCATION	DAMPER TYPE	MODEL	MATERIAL
FD-K610-1	1900x650	1925x750	MECHANICAL ROOM	B	0120	GS61
FD-K610-2	1300x700	1325x825	MECHANICAL ROOM	B	0120	SS66
FD-K610-3	400 DIA	475x500	MECHANICAL ROOM	CR	0130	GS61
FD-K620-1	1600x450	1625x550	MECHANICAL ROOM	B	0120	GS61
FD-K620-2	700 DIA	775x850	MECHANICAL ROOM	CR	0130	GS61
FD-K630-1	1600x450	1625x550	MECHANICAL ROOM	B	0120	GS61
FD-K630-2	300 DIA	375x400	MECHANICAL ROOM	CR	0130	GS61
FD-K630-3	450 DIA	525x575	MECHANICAL ROOM	CR	0130	GS61
FD-K630-4	600x500	625x600	MECHANICAL ROOM	B	0120	GS61
FD-K630-5	500 DIA	575x625	MECHANICAL ROOM	CR	0130	GS61
FD-K630-6	300 DIA	375x400	BALLAST ROOM	CR	0130	GS61
FD-K640-1	350x250	375x325	MECHANICAL ROOM	B	0120	GS61
FD-K640-2	300 DIA	375x400	MECHANICAL ROOM	CR	0130	GS61
FD-K640-3	350 DIA	425x450	MECHANICAL ROOM	CR	0130	GS61
FD-K640-4	450x400	475x475	ELECTRICAL ROOM	B	0120	GS61
FD-K640-5	400x400	425x475	ELECTRICAL ROOM	B	0120	GS61
FD-K611/612-1	400 DIA	475x500	MECHANICAL ROOM	CR	0130	GS61
FD-K611/612-2	400 DIA	475x500	MECHANICAL ROOM	CR	0130	SS66
FD-K621/622-1	700 DIA	775x850	MECHANICAL ROOM	CR	0130	GS61
FD-K631-1	500 DIA	575x625	MECHANICAL ROOM	CR	0130	GS61
FD-K631-2	550 DIA	625x675	MECHANICAL ROOM	CR	0130	GS61
FD-K631-3	300 DIA	375x400	MECHANICAL ROOM	CR	0130	GS61
FD-K631-4	300 DIA	375x400	BALLAST ROOM	CR	0130	GS61
FD-K630-7	500 DIA	575x625	PUMP ROOM	CR	0130	GS61
FD-K631-5	500 DIA	575x625	PUMP ROOM	CR	0130	GS61
NOTE: DAMPER MANUFACTURER, NAILOR HART						

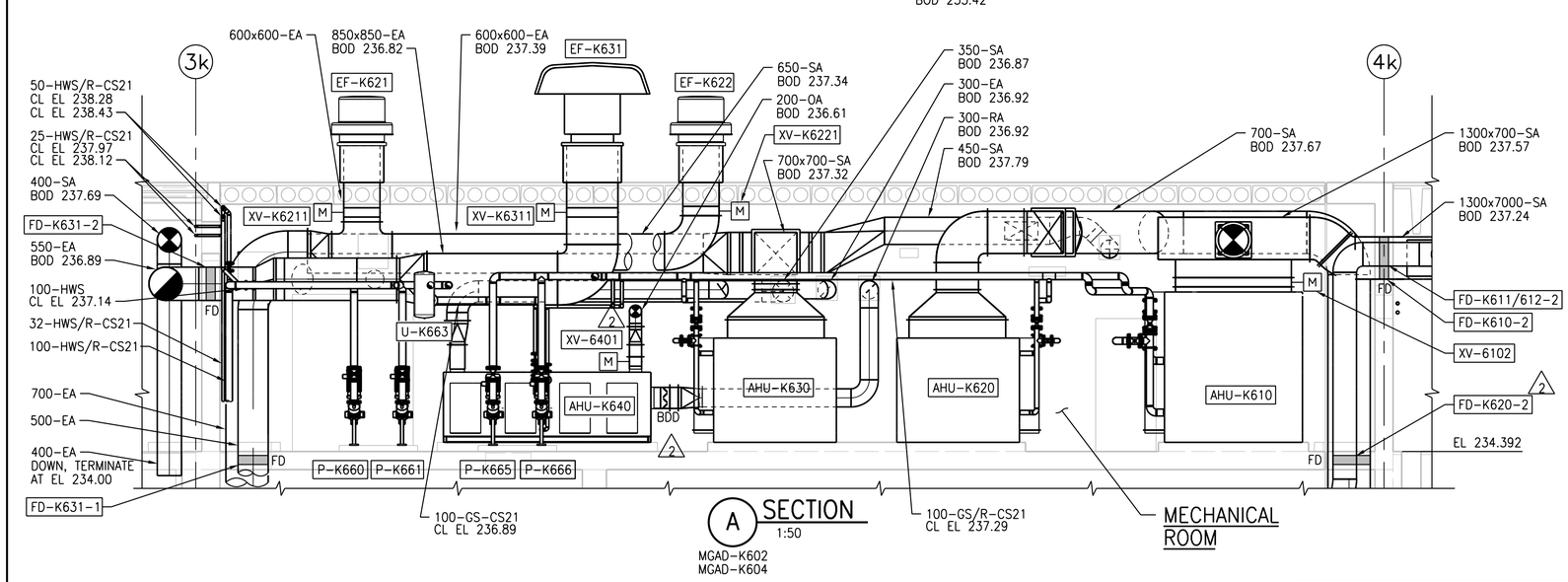

A SECTION 1:50

MGAD-K602
MGAD-K604

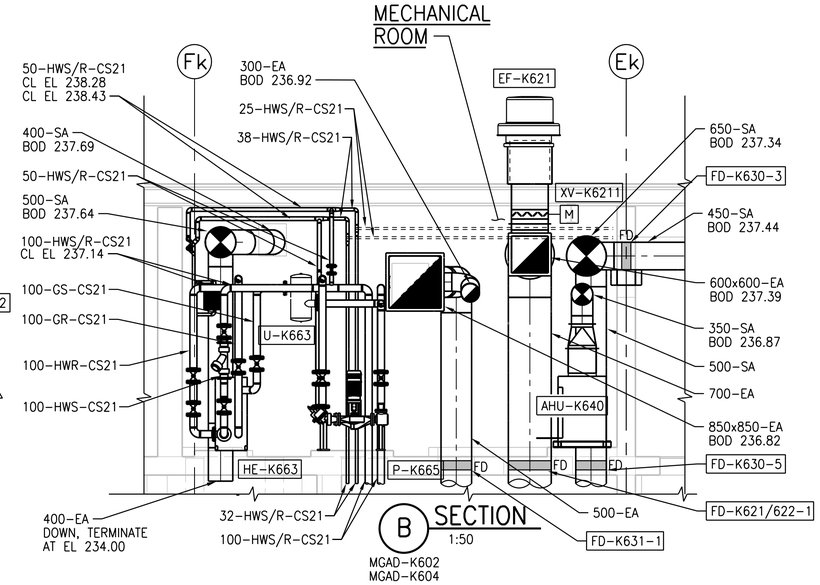

B SECTION 1:50

MGAD-K602
MGAD-K604

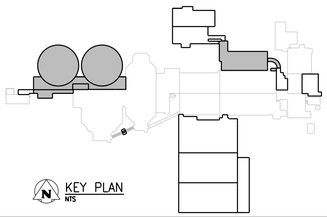

KEY PLAN
NTS

APEGM
Certificate of Authorization
CH2M HILL Canada Ltd.
No. 1441

NO.	REVISIONS	DATE	DESIGN	CHECK
03	ISSUED FOR CONSTRUCTION – 976-2016	2017/04/05	K.F.	J.C.
02	ISSUED FOR 90% PRELIMINARY REVIEW	11/2015	K.F.	J.C.
01	ISSUED FOR CONSTRUCTION	10/2015	K.F.	J.C.
00	ISSUED FOR TENDER	08/2015	K.F.	J.C.

CH2MHILL
SNC·LAVALIN
KGS GROUP

DESIGNED BY: R. BLACKWOOD
CHECKED BY: T. TRAN
DRAWN BY: K. FONG
APPROVED BY: H.T. FREIHAMMER
SCALE: 1:50
ISSUED FOR CONSTRUCTION BY: J. SHUMKA
DATE: 2017/04/05
DATE: 2017/04/05
CONSULTANT NO.: 474248

ENGINEER'S SEAL
April 6, 2017
PROVINCE OF MANITOBA
R.P.C. BLACKWOOD
Member 40579
REGISTERED PROFESSIONAL ENGINEER

Winnipeg
THE CITY OF WINNIPEG
WATER AND WASTE DEPARTMENT

SOUTH END WATER POLLUTION CONTROL CENTRE
SEWPCC UPGRADING/EXPANSION PROJECT
MECHANICAL
HIGH RATE CLARIFICATION BUILDING
HVAC – PARTIAL PLAN ,SECTIONS AND FIRE DAMPER SCHEDULE

CITY DRAWING NUMBER	SHEET	REV.	SIZE
1-0102-MGAD-K604		03	A1

PLOT DATE: 2017\03\31
FILE NAME:

©CH2M HILL 2017. ALL RIGHTS RESERVED.