A1 SIZE – 594mm x 841mm

FUSE SCHEDULE

TB	IDENTIFIER	SIZE	RATING
TB15	F51	6.3x32mm	10A TD
	F52	6.3x32mm	1A FA
TB16 (UPS)	F61	6.3x32mm	10A TD
	F62	6.3x32mm	2.25A TD
TB25	F41	6.3x32mm	10A TD
	F42	6.3x32mm	10A TD
	F43	6.3x32mm	10A TD
	F44	6.3x32mm	10A TD
	F45	6.3x32mm	10A TD
	F46	6.3x32mm	10A TD
	F47	6.3x32mm	10A TD
	F48	6.3x32mm	10A TD
	F49	6.3x32mm	10A TD

NOTES
FA = FAST ACTING
TD = TIME DELAY

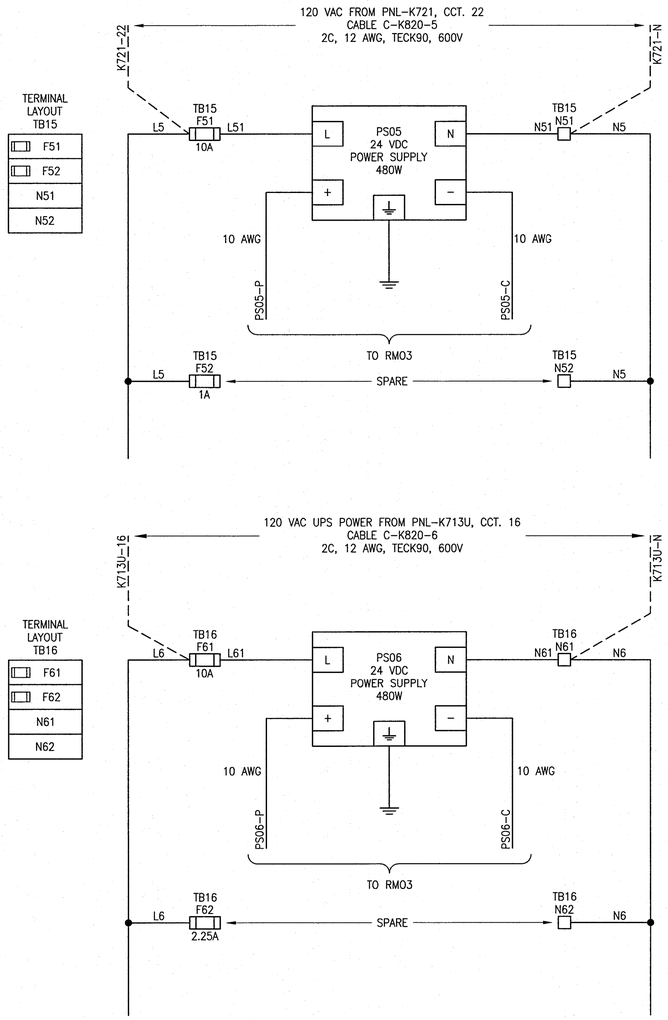

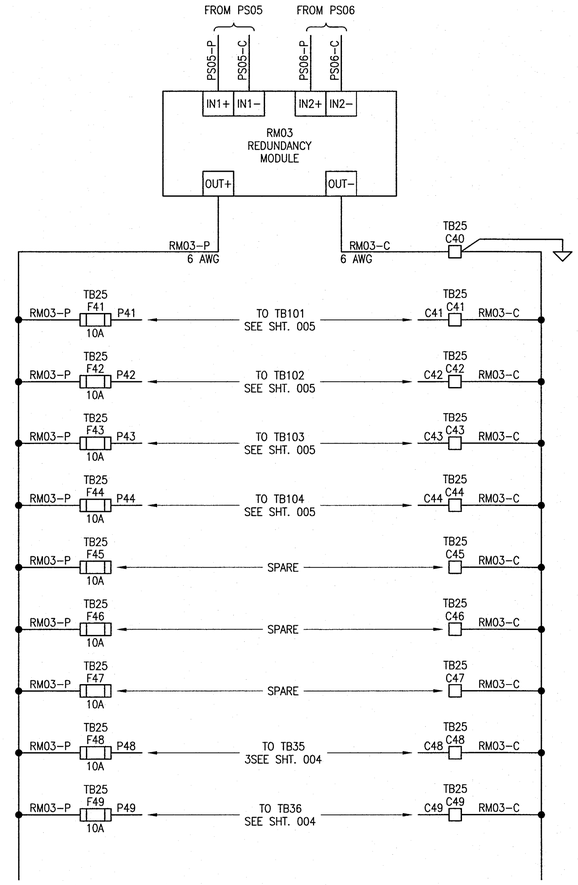

TERMINAL LAYOUT TB25

F41
F42
F43
F44
F45
F46
F47
F48
F49
C40
C41
C42
C43
C44
C45
C46
C47
C48
C49

RM03 POWER CONSUMPTION SCHEDULE AT 24 VDC

LOAD	CURRENT (mA)	NOTES
CP-K826	6440	–
CP-K827	6700	–
TOTAL	13140	

NOTES
1. BASED ON DATA SHEET.
2. DUAL FEED, LOADS INCLUDED.

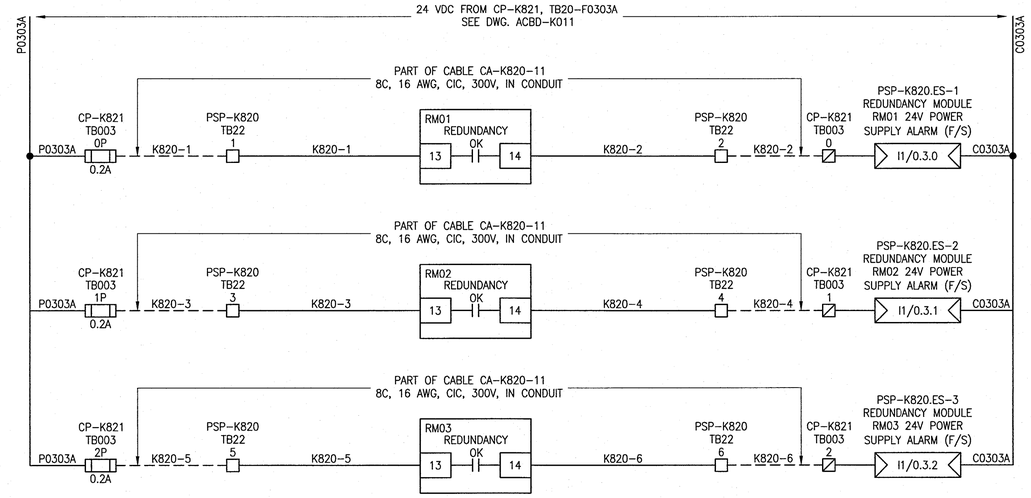

TERMINAL LAYOUT TB22

1
2
3
4
5
6

LEGEND:
- ISOLATED GROUND
- EQUIPMENT GROUND
- PSP-K820 TERMINAL
- CP-K821 TERMINAL

REFERENCE DRAWINGS	DESCRIPTION
–	–

APEGM Certificate of Authorization
SNC-Lavalin Inc.
No. 4489

NO.	REVISIONS	DATE	DESIGN	CHECK
00	ISSUED FOR CONSTRUCTION – 976-2016	2017/04/05	MW	PC

CH2MHILL. SNC·LAVALIN KGS GROUP

DESIGNED BY: M. WANG	CHECKED BY: P. CHICATUN
DRAWN BY: M. WANG	APPROVED BY: E. RYCZKOWSKI
SCALE: NTS	ISSUED FOR CONSTRUCTION BY: J. SHUMKA
DATE: 2014/06/01	DATE: 2017/04/05
CONSULTANT NO.: 474248	

ENGINEER'S SEAL
PROVINCE OF MANITOBA
CHICATUN
Member 30307
REGISTERED PROFESSIONAL ENGINEER
APR. 4 2017
REV. 00

Winnipeg
THE CITY OF WINNIPEG
WATER AND WASTE DEPARTMENT

SOUTH END WATER POLLUTION CONTROL CENTRE
SEWPCC UPGRADING/EXPANSION PROJECT
AUTOMATION – POWER DISTRIBUTION SCHEMATIC
HIGH RATE CLARIFICATION BUILDING
PSP-K820 POWER SUPPLY CABINET

CITY DRAWING NUMBER	SHEET	REV.	SIZE
1-0102-ACBD-K002	003	00	A1

LAST SAVE: 2017/04/03 – 9:02am
PATH: C:\pw_workdir\ch2mhill_wbg\ve006717\d0356273\1-0102-ACBD-K002-003.dwg

PLOT DATE: Apr 03, 2017 – 9:02am
FILE NAME: 1-0102-ACBD-K002-003.dwg