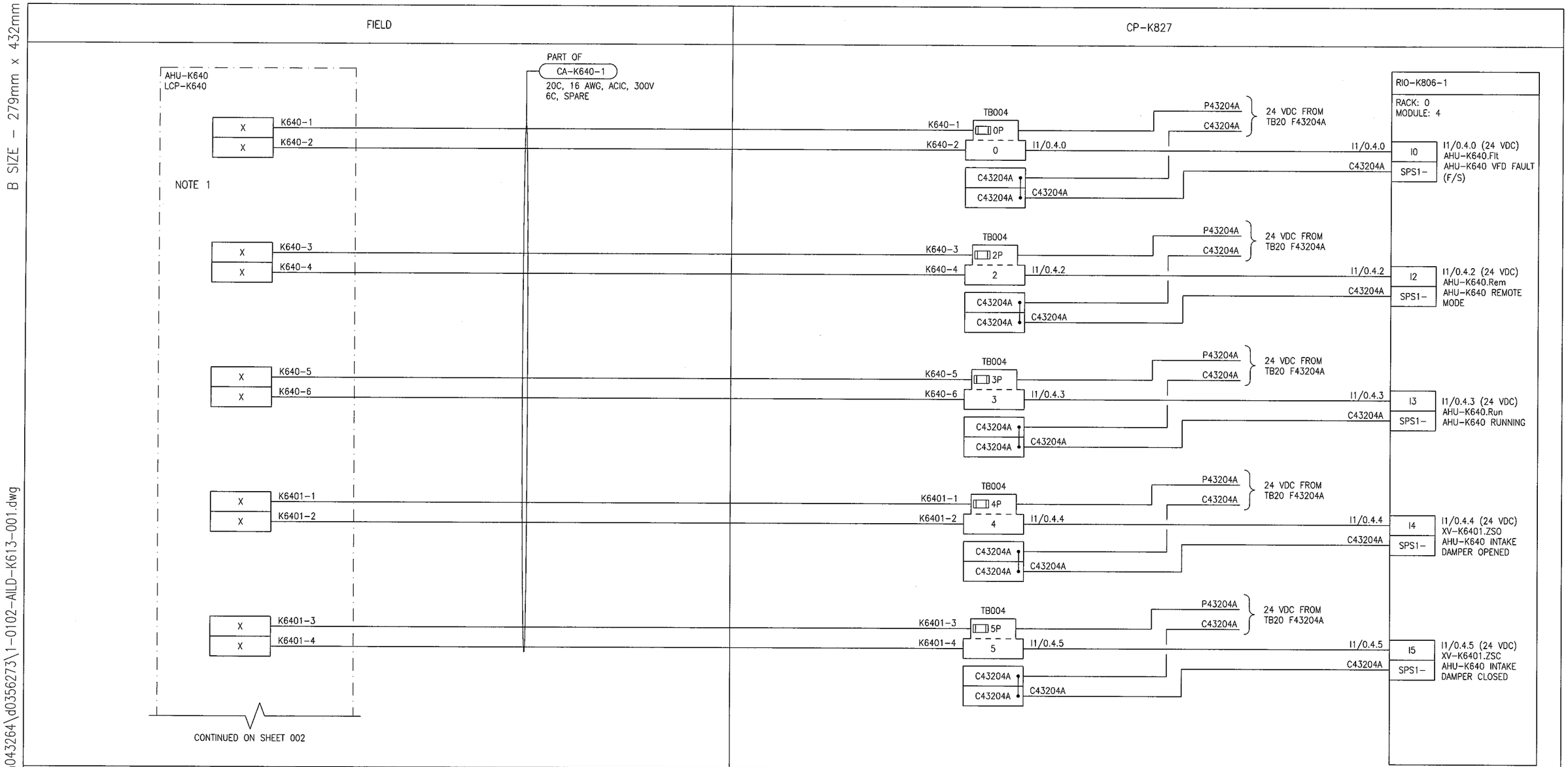

NOTES

1. COORDINATE WIRING WITH PACKAGE SYSTEM VENDOR. PROVIDE AS-BUILT MARKUPS BASED ON VENDOR SHOP DRAWINGS.

APEGM Certificate of Authorization
SNC-Lavalin Inc.
No. 4489

NO.	REVISIONS	DATE	DESIGN	CHECK
00	ISSUED FOR CONSTRUCTION – 976-2016	2017/04/05	SSB	TMC

SNC·LAVALIN CH2MHILL KGS GROUP CONSULTING ENGINEERS

DESIGNED BY: S. BOGHOSIAN	CHECKED BY: T. CHURCH
DRAWN BY: S. BOGHOSIAN	APPROVED BY: E. RYCZKOWSKI
SCALE: NTS	DATE: 2016/10/14
ISSUED FOR CONSTRUCTION BY: J. SHUMKA	DATE: 2017/04/05
CONSULTANT NO.: 474248	

ENGINEER'S SEAL
PROVINCE OF MANITOBA
T. M. Church
T. M. CHURCH
Member
32682
REGISTERED PROFESSIONAL ENGINEER
Apr. 5, 2017

Winnipeg
THE CITY OF WINNIPEG
WATER AND WASTE DEPARTMENT

SOUTH END WATER POLLUTION CONTROL CENTRE
SEWPCC UPGRADING/EXPANSION PROJECT
AUTOMATION – LOOP DIAGRAM
AHU-K640
ELECTRICAL ROOM AIR HANDLING UNIT

CITY DRAWING NUMBER	SHEET	REV.	SIZE
1-0102-AILD-K613	001	00	B

B SIZE – 279mm x 432mm

LAST SAVE: 2017/04/01 – 10:45am
PATH: C:\pw_workdir\ch2mhill_wbg\sh043264\d0356273\1-0102-AILD-K613-001.dwg

PLOT DATE: Apr 01, 2017 – 10:45am
FILE NAME: 1-0102-AILD-K613-001.dwg