A1 SIZE – 594mm x 841mm

FUSE SCHEDULE

TB	IDENTIFIER	SIZE	RATING
TB13	F31	6.3x32mm	10A TD
	F32	6.3x32mm	1A FA
TB14 (UPS)	F41	6.3x32mm	10A TD
	F42	6.3x32mm	2.25A TD
	F43	6.3x32mm	1A FA
	F44	6.3x32mm	1A TD
	F45	6.3x32mm	2.5 FA
	F46	6.3x32mm	1A FA
TB18	F81	5x20mm	2.5A TD
	F82	5x20mm	2.5A TD
	F83	5x20mm	2.5A TD
	F84	5x20mm	2.5A TD
	F85	5x20mm	2.5A TD
TB23	F21	6.3x32mm	10A TD
	F22	6.3x32mm	5A TD
	F23	6.3x32mm	10A TD
	F24	6.3x32mm	10A TD
	F25	6.3x32mm	10A TD
	F26	6.3x32mm	10A TD
	F27	6.3x32mm	1A TD
	F28	6.3x32mm	10A TD
	F29	6.3x32mm	10A TD

NOTES
FA = FAST ACTING
TD = TIME DELAY

UPS POWER CONSUMPTION SCHEDULE AT 120 VAC

LOAD	CURRENT (mA)	NOTES
PS04	5100	1
CPT02	850	1
FIT–K1202	292	1
LIT–K1202	300	1
AIT–K1253	834	1
TOTAL	7376	

NOTES
1. BASED ON DATA SHEET.

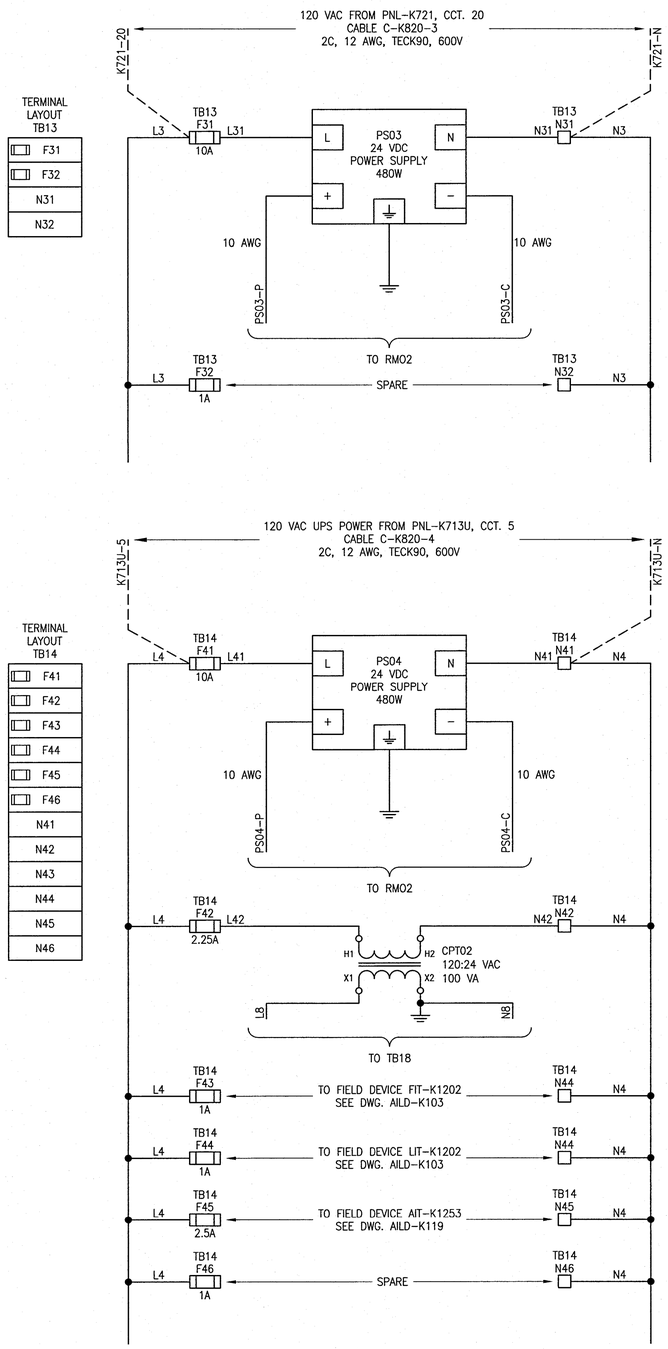

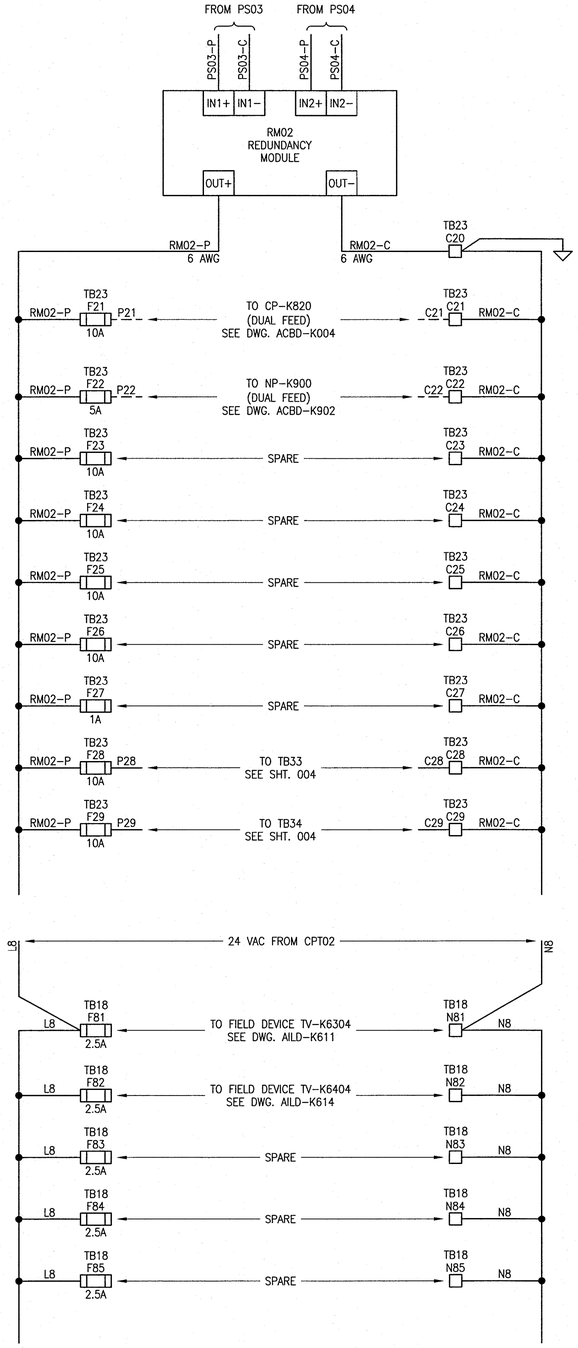

RM02 POWER CONSUMPTION SCHEDULE AT 24 VDC

LOAD	CURRENT (mA)	NOTES
CP–K820	4984	2
NP–K900	1760	2
LIT–K1232	833	1
FIT–K2541	380	1
CP–K821	1000	1
LED15V24	500	1
TOTAL	9457	

NOTES
1. BASED ON DATA SHEET.
2. DUAL FEED, LOADS INCLUDED.

CPT02 POWER CONSUMPTION SCHEDULE AT 24 VAC

LOAD	CURRENT (mA)	NOTES
TV–K6304	709	1
TV–K6404	709	1
TOTAL	1418	

NOTES
1. BASED ON DATA SHEET.

LEGEND:
ISOLATED GROUND
EQUIPMENT GROUND

REFERENCE DRAWINGS	DESCRIPTION
–	–

APEGM Certificate of Authorization
SNC-Lavalin Inc.
No. 4489

NO.	REVISIONS	DATE	DESIGN	CHECK
00	ISSUED FOR CONSTRUCTION – 976–2016	2017/04/05	MW	PC

CH2MHILL. SNC·LAVALIN KGS GROUP

DESIGNED BY: M. WANG	CHECKED BY: P. CHICATUN
DRAWN BY: M. WANG	APPROVED BY: E. RYCZKOWSKI
SCALE: NTS	ISSUED FOR CONSTRUCTION BY: J. SHUMKA
DATE: 2014/06/01	DATE: 2017/04/05
CONSULTANT NO.: 474248	

ENGINEER'S SEAL
PROVINCE OF MANITOBA
CHICATUN
Member
30307
REGISTERED PROFESSIONAL ENGINEER
APR. 4, 2017
REV. 00

Winnipeg
THE CITY OF WINNIPEG
WATER AND WASTE DEPARTMENT

SOUTH END WATER POLLUTION CONTROL CENTRE
SEWPCC UPGRADING/EXPANSION PROJECT
AUTOMATION – POWER DISTRIBUTION SCHEMATIC
HIGH RATE CLARIFICATION BUILDING
PSP–K820 POWER SUPPLY CABINET

CITY DRAWING NUMBER	SHEET	REV.	SIZE
1–0102–ACBD–K002	002	00	A1

LAST SAVE: 2017/04/01 – 10:23am
PATH: C:\pw_workdir\ch2mhill_wbg\sh043264\d0356273\1–0102–ACBD–K002–002.dwg

PLOT DATE: Apr 01, 2017 – 10:23am
FILE NAME: 1–0102–ACBD–K002–002.dwg