A1 SIZE – 594mm x 841mm

LEGEND:

——— COPPER COMMUNICATION CONNECTION

– – – FIBRE COMMUNICATION CONNECTION

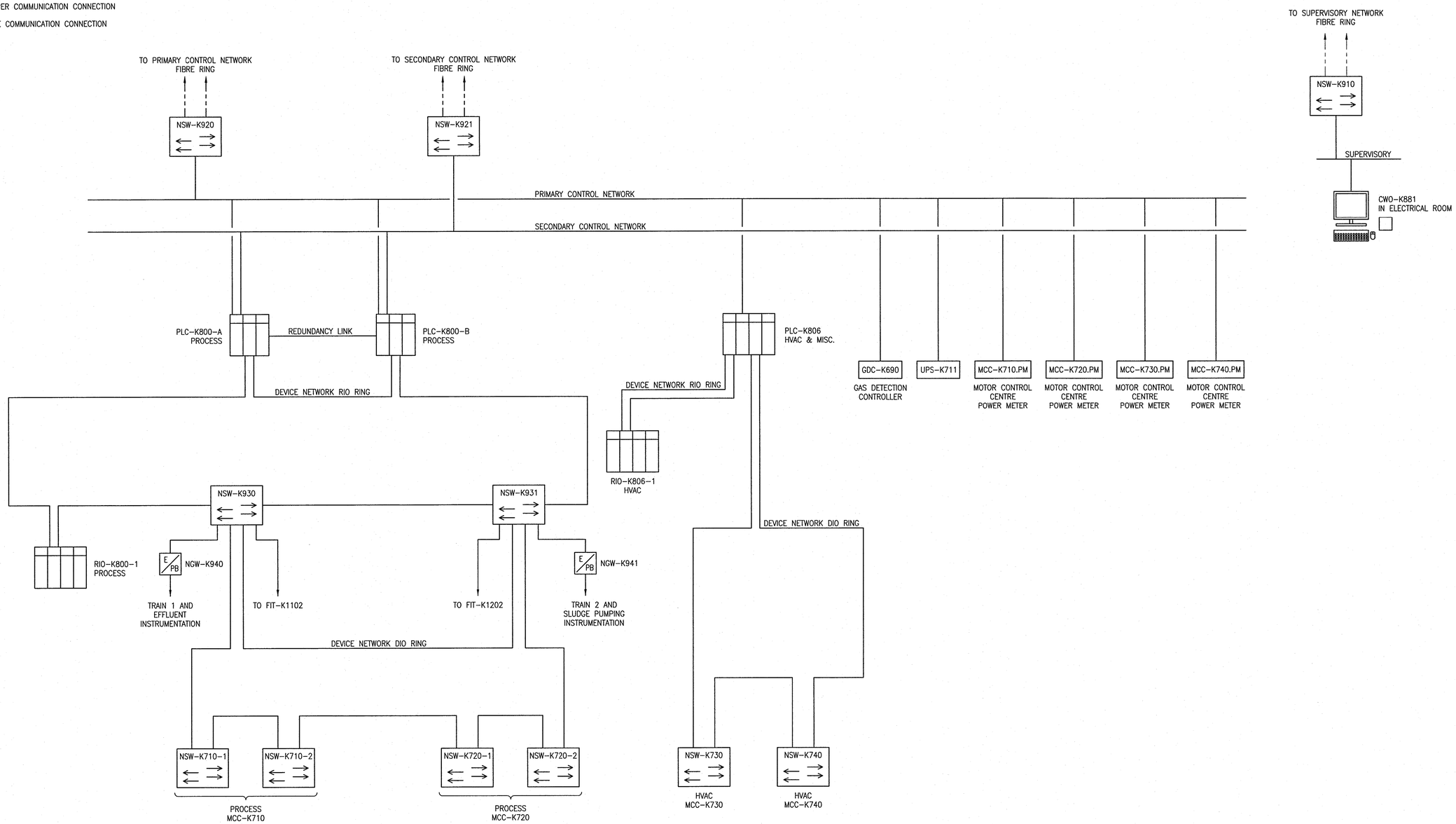

NOTES:

1. ONLY HIGH LEVEL ARCHITECTURE IS DEPICTED, CONNECTIONS MAY NOT BE EXACTLY AS SHOWN. SEE NETWORK DIAGRAM FOR ADDITIONAL DETAILS.

REFERENCE DRAWINGS	DESCRIPTION
1-0102-ANET-A001	SUPERVISORY, CONTROL AND SERVER NETWORK OVERVIEW
1-0102-ANET-A005	FACILITY FIBRE ALLOCATION

APEGM Certificate of Authorization
SNC-Lavalin Inc.
No. 4489

NO.	REVISIONS	DATE	DESIGN	CHECK
00	ISSUED FOR CONSTRUCTION – 976-2016	2017/04/05	PC	TMC

CH2MHILL. SNC·LAVALIN KGS GROUP

DESIGNED BY: P. CHICATUN	CHECKED BY: T. CHURCH
DRAWN BY: M. WANG	APPROVED BY: E. RYCZKOWSKI
SCALE: NTS	ISSUED FOR CONSTRUCTION BY: J. SHUMKA
DATE: 2014/06/01	DATE: 2017/04/05
CONSULTANT NO.: 474248	

ENGINEER'S SEAL
PROVINCE OF MANITOBA
CHICATUN
Member 30307
REGISTERED PROFESSIONAL ENGINEER
APR. 4, 2017
REV.00

Winnipeg
THE CITY OF WINNIPEG
WATER AND WASTE DEPARTMENT

SOUTH END WATER POLLUTION CONTROL CENTRE
SEWPCC UPGRADING/EXPANSION PROJECT
AUTOMATION
HIGH RATE CLARIFICATION
CONTROL SYSTEM ARCHITECTURE

CITY DRAWING NUMBER	SHEET	REV.	SIZE
1-0102-ABDG-K001	001	00	A1

PLOT DATE: Apr 01, 2017 – 10:09am

FILE NAME:1-0102-ABDG-K001.dwg

LAST SAVE: 2017/04/01 – 10:09am
PATH: C:\pw_workdir\ch2mhill_wbg\sh043264\d0356273\1-0102-ABDG-K001.dwg