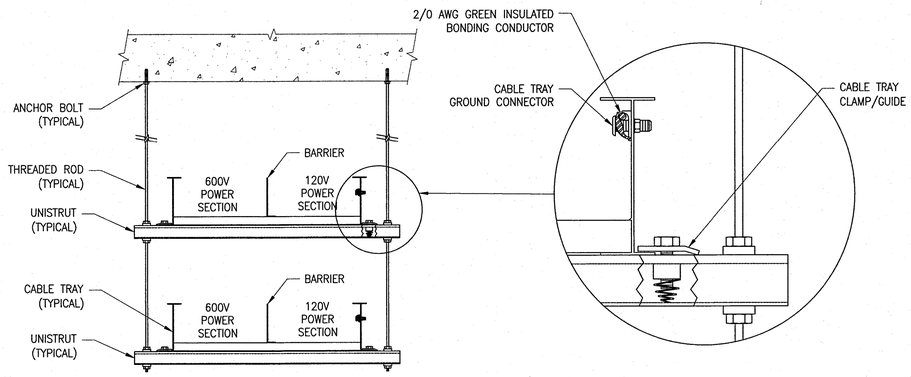

A TRAPEZE SUPPORT (2-TIER TRAY)
NTS
ECTR-K002

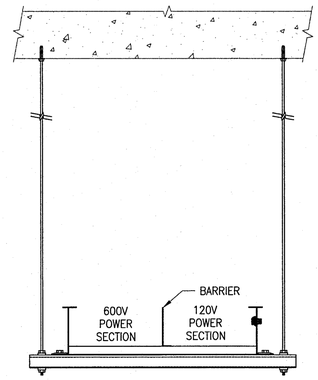

B TRAPEZE SUPPORT
NTS
ECTR-K002

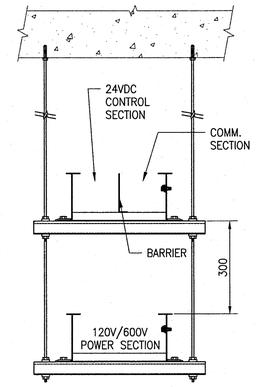

C TRAPEZE SUPPORT (2-TIER TRAYS)
NTS
ECTR-K002

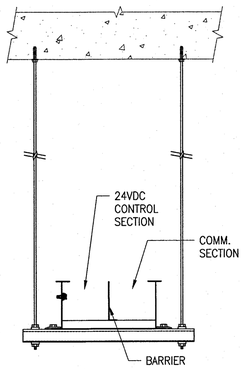

D TRAPEZE SUPPORT
NTS
ECTR-K002

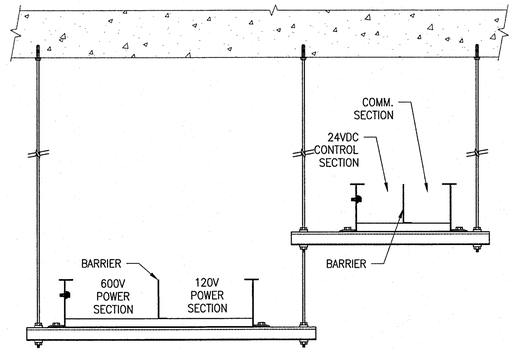

E TRAPEZE SUPPORT (ADJACENT TRAYS)
NTS
ECTR-K002

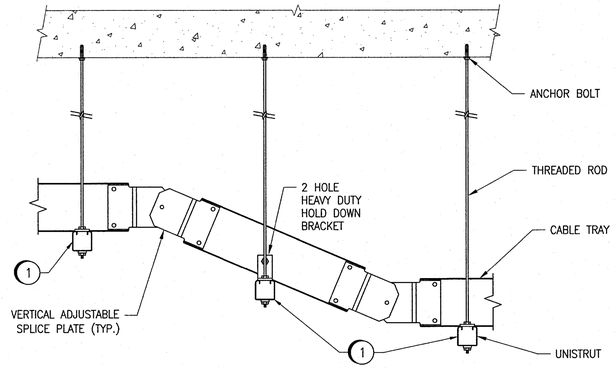

G CABLE TRAY RISER SUPPORT
NTS
ECTR-K001, K002

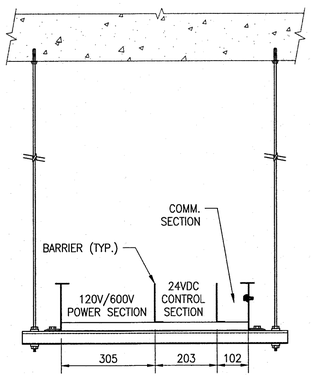

H TRAPEZE SUPPORT
NTS
ECTR-K002

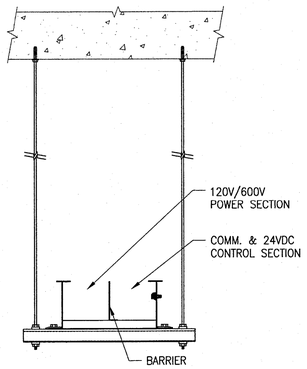

J TRAPEZE SUPPORT
NTS
ECTR-K002

GENERAL NOTES:

1. REFER TO DWG. 1-0102-ECTR-K002-001 FOR CABLE TRAY NOTES.
2. SECTIONS AND DETAILS SHOW GENERAL DESIGN CONCEPTS ONLY. ADJUST INSTALLATION AND MATERIALS TO REFLECT ACTUAL ON-SITE CONDITIONS / INSTALLATIONS.

SPECIFIC NOTES:

1. SUPPORTS SHALL BE LOCATED WITHIN 610mm (2 FT.) OF EACH SIDE OF THE VERTICAL ADJUSTABLE SPLICE PLATES.
2. WHERE THE CONTROL SECTION IS BEING SHARED BY THE COMMUNICATION AND 24VDC CONTROL CABLES, THE CABLES SHALL BE RUN APART FROM EACH OTHER (NOT BUNDLED).

REFERENCE DRAWINGS	DESCRIPTION

APEGM Certificate of Authorization
SNC-Lavalin Inc.
No. 4489

NO.	REVISIONS	DATE	DESIGN	CHECK
00	ISSUED FOR CONSTRUCTION - 976-2016	2017/04/05	SLJ	DEB

CH2MHILL. SNC·LAVALIN KGS GROUP

DESIGNED BY: S. JUGANAS	CHECKED BY: D. BECKER
DRAWN BY: MJ. PERSSON	APPROVED BY: D. BECKER
SCALE: NTS	ISSUED FOR CONSTRUCTION BY: J. SHUMKA
DATE: 2015/02/12	DATE: 2017/04/05
CONSULTANT NO.: 474248	

ENGINEER'S SEAL
PROVINCE OF MANITOBA
D.E. BECKER
Member 23646
REGISTERED PROFESSIONAL ENGINEER
April 5 2017

Winnipeg
THE CITY OF WINNIPEG
WATER AND WASTE DEPARTMENT

SOUTH END WATER POLLUTION CONTROL CENTRE
SEWPCC UPGRADING/EXPANSION PROJECT
ELECTRICAL
HIGH RATE CLARIFICATION BUILDING
CABLE TRAY DETAILS

CITY DRAWING NUMBER	SHEET	REV.	SIZE
1-0102-ECTR-K003	001	00	A1

PLOT DATE: Mar 28, 2017 - 10:45am
FILE NAME: 1-0102-ECTR-K003-001.dwg

A1 SIZE - 594mm x 841mm

LAST SAVE: 2017/03/28 - 10:45am
PATH: M:\614099\4ENG\47ELE\DD - General DWG\REV\2017-04-05 Issued for Construction - 976-2016\K HRC Building(High Rate Clarification)\DWG1-0102-ECTR-K003-001.dwg