B SIZE – 279mm x 432mm

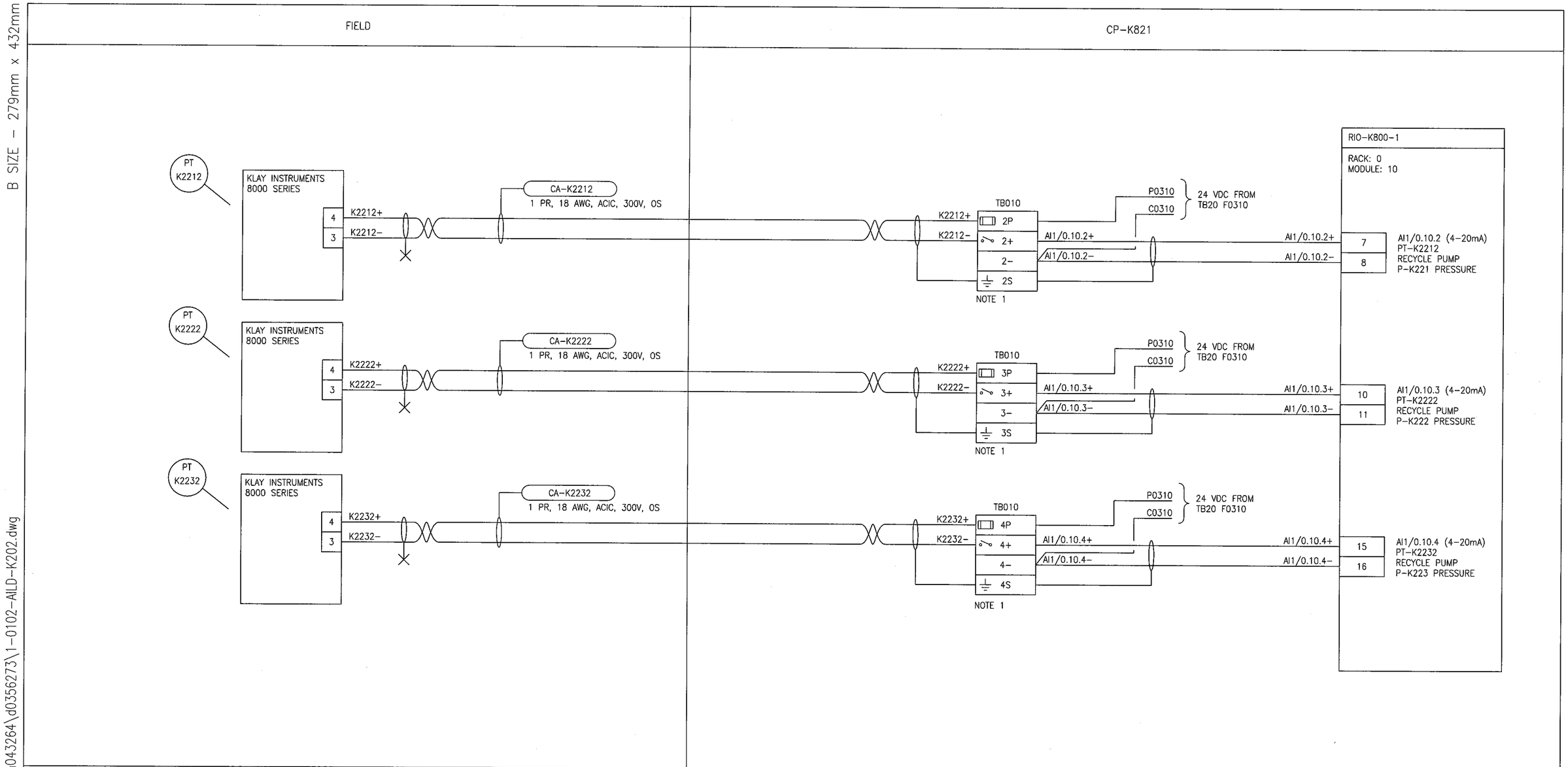


NOTES

1. GROUNDED TERMINALS CONNECTED TO ISOLATED GROUND THROUGH DIN RAIL.

APEGM Certificate of Authorization
SNC-Lavalin Inc.
No. 4489

SNC·LAVALIN CH2MHILL KGS GROUP CONSULTING ENGINEERS

| NO. | REVISIONS | DATE | DESIGN | CHECK |
|---|---|---|---|---|
| 00 | ISSUED FOR CONSTRUCTION – 976-2016 | 2017/04/05 | SSB | TMC |

| | |
|---|---|
| DESIGNED BY: S. BOGHOSIAN | CHECKED BY: T. CHURCH |
| DRAWN BY: MJ. PERSSON | APPROVED BY: E. RYCZKOWSKI |
| SCALE: NTS | DATE: 2016/09/07 |
| ISSUED FOR CONSTRUCTION BY: J. SHUMKA | DATE: 2017/04/05 |
| CONSULTANT NO.: 474248 | |

ENGINEER'S SEAL
PROVINCE OF MANITOBA
T.M. CHURCH
Member 32682
REGISTERED PROFESSIONAL ENGINEER
Apr. 5, 2017

Winnipeg
THE CITY OF WINNIPEG
WATER AND WASTE DEPARTMENT

SOUTH END WATER POLLUTION CONTROL CENTRE
SEWPCC UPGRADING/EXPANSION PROJECT
AUTOMATION – LOOP DIAGRAM
PT-K2212, PT-K2222 AND PT-K2232
SLUDGE RECYCLE PUMPS PRESSURE TRANSMITTERS

| CITY DRAWING NUMBER | SHEET | REV. | SIZE |
|---|---|---|---|
| 1-0102-AILD-K202 | 001 | 00 | B |

LAST SAVE: 2017/04/01 – 10:43am
PATH: C:\pw_workdir\ch2mhill_wbg\sh043264\d0356273\1-0102-AILD-K202.dwg

PLOT DATE: Apr 01, 2017 – 10:43am

FILE NAME: 1-0102-AILD-K202.dwg