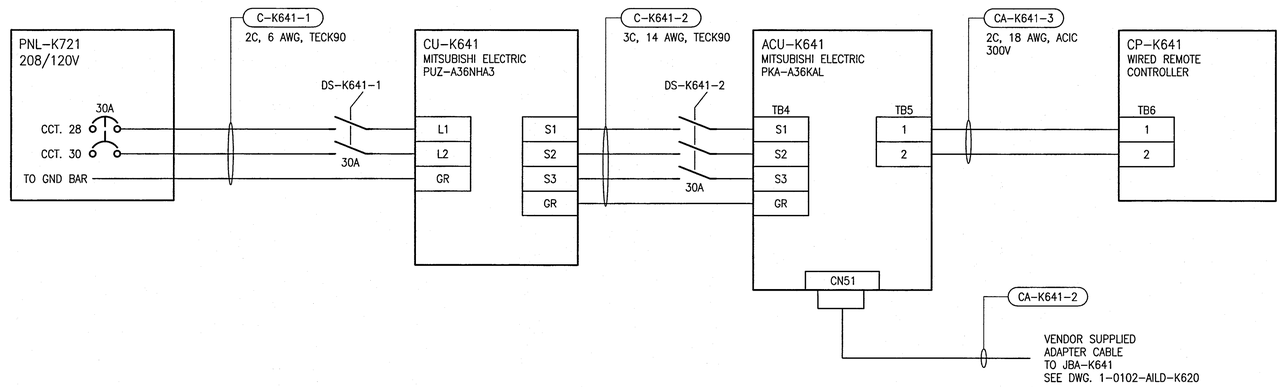

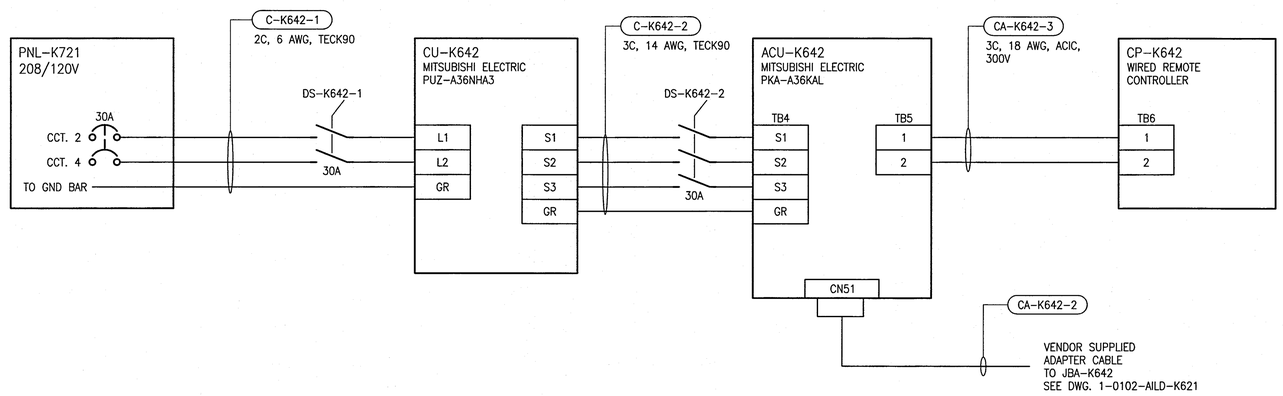

REFERENCE DRAWINGS	DESCRIPTION
–	–

APEGM
Certificate of Authorization
SNC-Lavalin Inc.
No. 4489

NO.	REVISIONS	DATE	DESIGN	CHECK
00	ISSUED FOR CONSTRUCTION – 976-2016	2017/04/05	SLJ	DEB

CH2MHILL.
SNC·LAVALIN
KGS GROUP CONSULTING ENGINEERS

DESIGNED BY: M. WANG	CHECKED BY: E. RYCZKOWSKI
DRAWN BY: M. WANG	APPROVED BY: D. BECKER
SCALE: NTS	ISSUED FOR CONSTRUCTION BY: J. SHUMKA
DATE: 2015/02/19	DATE: 2017/04/05
CONSULTANT NO.: 474248	

ENGINEER'S SEAL
PROVINCE OF MANITOBA
D.E. BECKER
Member
23646
REGISTERED PROFESSIONAL ENGINEER
April 5, 2017

Winnipeg
THE CITY OF WINNIPEG
WATER AND WASTE DEPARTMENT

SOUTH END WATER POLLUTION CONTROL CENTRE
SEWPCC UPGRADING/EXPANSION PROJECT
ELECTRICAL – WIRING DIAGRAM
HIGH RATE CLARIFICATION BUILDING
CU-K641, ACU-K641, CU-K642 AND ACU-K642

CITY DRAWING NUMBER	SHEET	REV.	SIZE
1-0102-EWDG-K001	001	00	A1

A1 SIZE – 594mm x 841mm

LAST SAVE: 2017/03/24 – 9:55am
PATH: C:\DWG\1-0102-EWDG-K001.dwg

PLOT DATE: Mar 24, 2017 – 9:55am

FILE NAME:1-0102-EWDG-K001.dwg