A1 SIZE – 594mm x 841mm

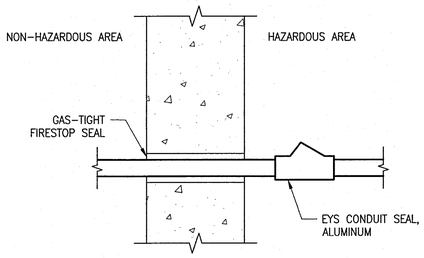

(A) TYPICAL NEW CONDUIT EXITING HAZARDOUS AREA
NTS

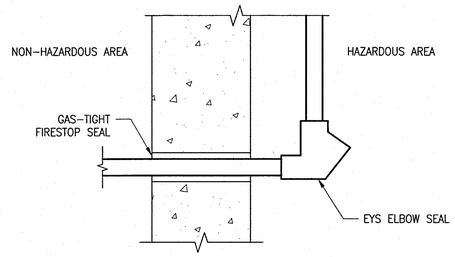

(B) TYPICAL NEW CONDUIT EXITING HAZARDOUS AREA
NTS

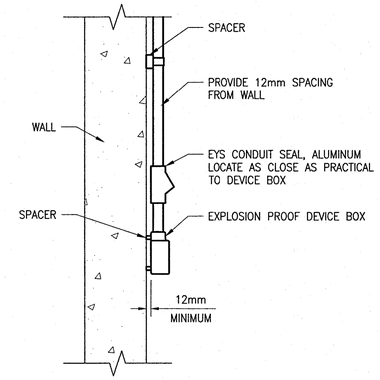

(C) TYPICAL EXPLOSION PROOF DEVICE MOUNTING
NTS

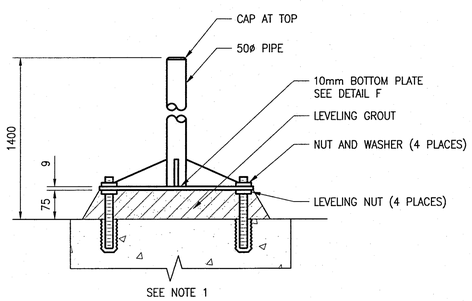

(D) PIPE STAND – FLOOR MOUNT
NTS

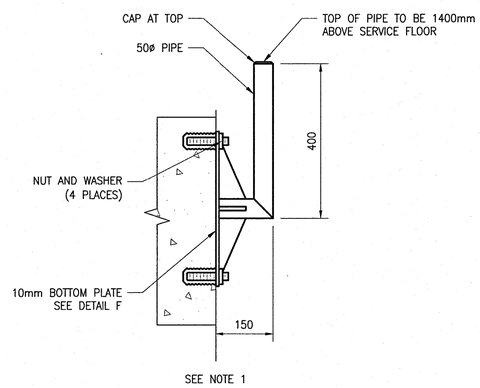

(E) PIPE STAND – WALL MOUNT
NTS

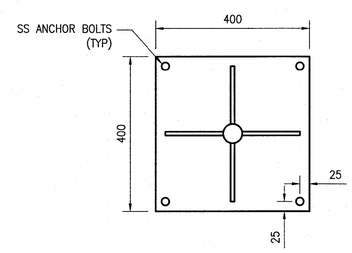

(F) MOUNTING PLATE
NTS

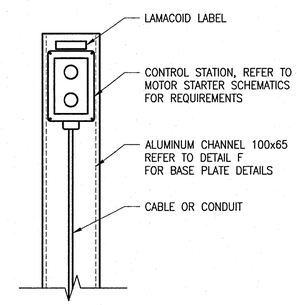

(G) TYPICAL LOCAL CONTROL STATION
NTS

NOTES

1. PIPE AND MOUNTING PLATE COPPER FREE ALUMINUM OR GALVANIZED STEEL.

APEGM Certificate of Authorization
SNC-Lavalin Inc.
No. 4489

NO.	REVISIONS	DATE	DESIGN	CHECK
00	ISSUED FOR CONSTRUCTION – 976–2016	2017/04/05	SSB	TMC

CH2MHILL. SNC·LAVALIN KGS GROUP

DESIGNED BY: S. BOGHOSIAN	CHECKED BY: T. CHURCH
DRAWN BY: MJ. PERSSON	APPROVED BY: E. RYCZKOWSKI
SCALE: NTS	ISSUED FOR CONSTRUCTION BY: J. SHUMKA
DATE: 2015/10/09	DATE: 2017/04/05
CONSULTANT NO.: 474248	

ENGINEER'S SEAL
PROVINCE OF MANITOBA
T.M. CHURCH
Member 32682
REGISTERED PROFESSIONAL ENGINEER
Apr. 5, 2017

Winnipeg
THE CITY OF WINNIPEG
WATER AND WASTE DEPARTMENT

SOUTH END WATER POLLUTION CONTROL CENTRE
SEWPCC UPGRADING/EXPANSION PROJECT
AUTOMATION
INSTALLATION DETAILS
MISCELLANEOUS

CITY DRAWING NUMBER	SHEET	REV.	SIZE
1–0102–ADTL–A010	001	00	A1

PLOT DATE: Apr 01, 2017 – 4:02pm
FILE NAME: 1–0102–ADTL–A010.dwg

LAST SAVE: 2017/04/01 – 4:02pm
PATH: C:\pw_workdir\ch2mhill_wbg\sh043264\d0356273\1–0102–ADTL–A010.dwg