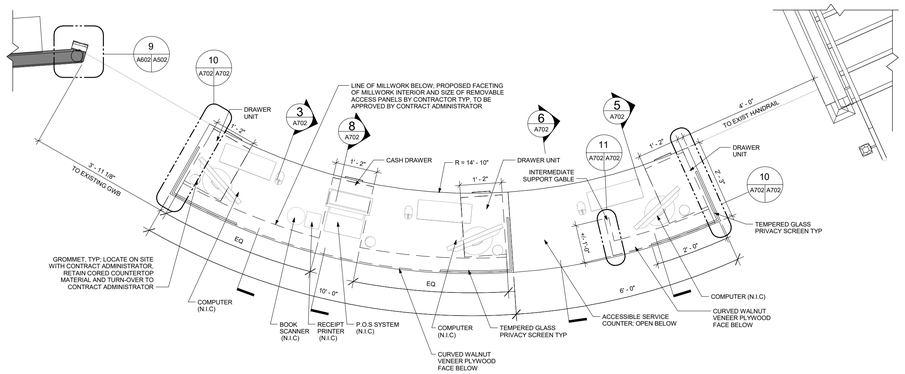

9 LARGE SCALE PLAN - RECEPTION DESK
1/2" = 1'-0"

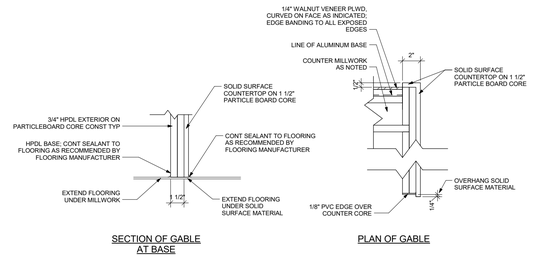

10 TYPICAL GABLE END DETAIL
1 1/2" = 1'-0"

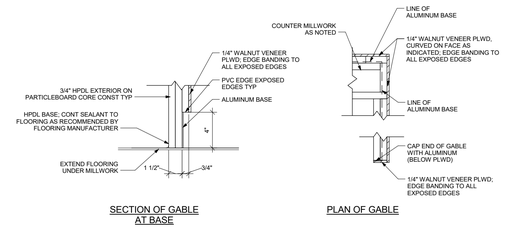

11 INTERMEDIATE SUPPORT GABLE AT ACCESSIBLE COUNTER
1 1/2" = 1'-0"

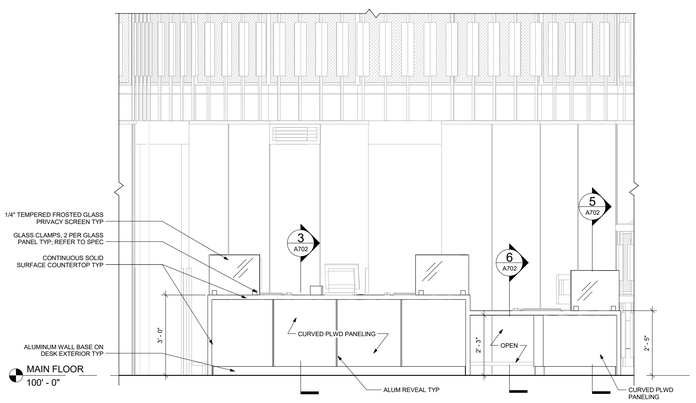

1 INTERIOR ELEVATION - FRONT DESK 102 - E
3/8" = 1'-0"

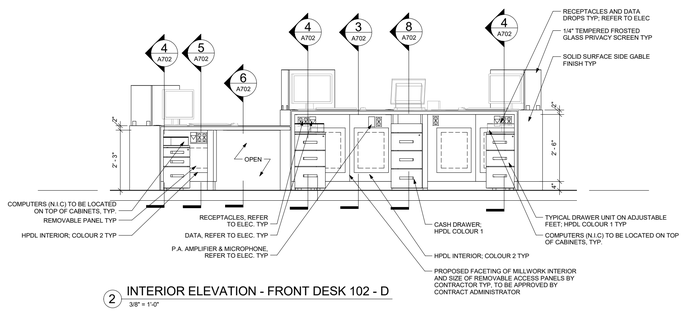

2 INTERIOR ELEVATION - FRONT DESK 102 - D
3/8" = 1'-0"

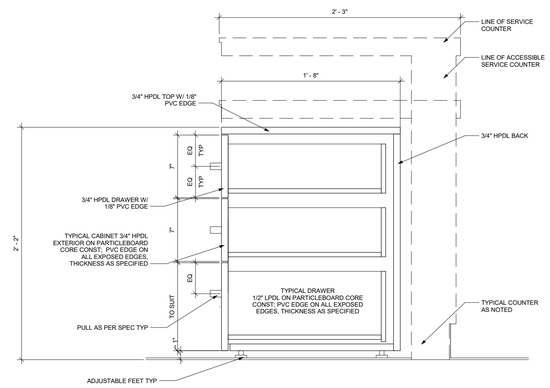

4 TYPICAL DRAWER UNIT SECTION
1 1/2" = 1'-0"

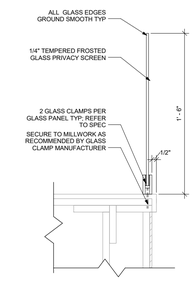

7 PRIVACY SCREEN SECTION
1 1/2" = 1'-0"

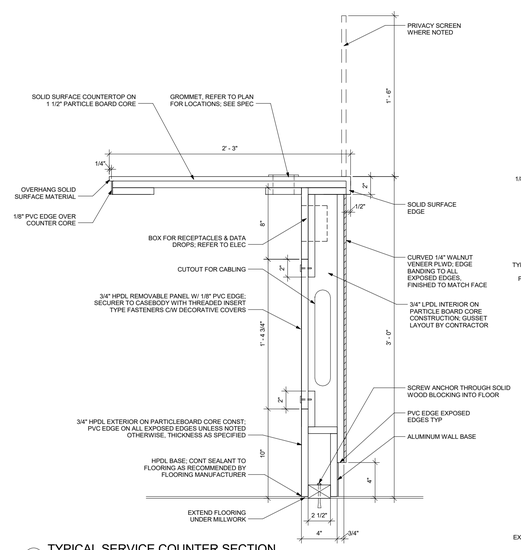

3 TYPICAL SERVICE COUNTER SECTION
1 1/2" = 1'-0"

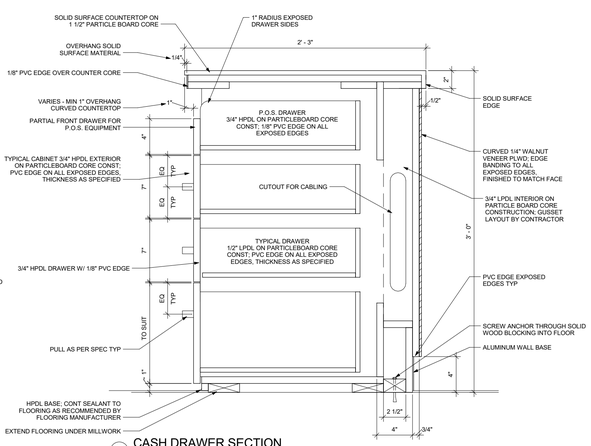

8 CASH DRAWER SECTION
1 1/2" = 1'-0"

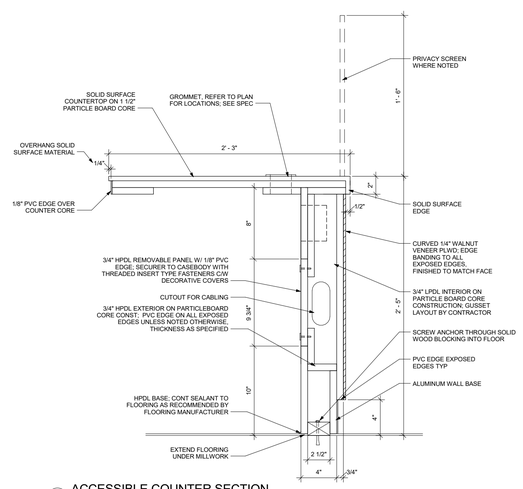

5 ACCESSIBLE COUNTER SECTION
1 1/2" = 1'-0"

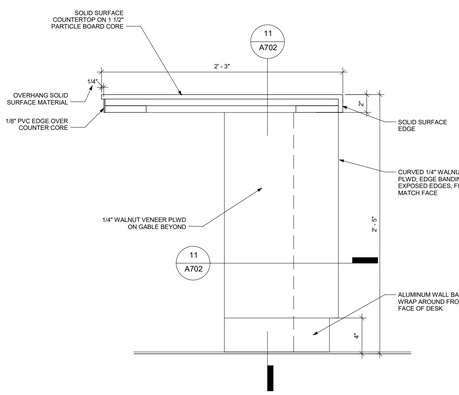

6 ACCESSIBLE SERVICE COUNTER SECTION
1 1/2" = 1'-0"

bridgmancollaborative
ARCHITECTURE
www.bridgmancollaborative.ca
678 MAIN STREET WINNIPEG, MB R3B 1E4
204 488 3857 tel. 204 488 0216 fax.
bridgmancollaborative

PROVINCE OF MANITOBA
WINS BRIDGMAN
SEPT 9, 2016
REGISTERED ARCHITECT

Winnipeg
THE CITY OF WINNIPEG PLANNING, PROPERTY AND DEVELOPMENT DEPARTMENT
MUNICIPAL ACCOMMODATIONS DIVISION
4TH FLOOR - 185 KING STREET
R3B 1J1

Project:
St. Vital Library

6 Fermor Ave. Winnipeg, MB

Project Number: 16005
Bid Opportunity Number: 768-2016

Drawing Title:
INT. ELEVATIONS & DETAILS

#	Issue/Revision	Date
1	ISSUED FOR CONSTRUCTION	SEPT 9, 2016

Sheet No: A702

This drawing is property of the Architect and cannot be reproduced or used without the consent of the Architect. The contractor is responsible for checking and verifying all levels and dimensions and shall report all discrepancies to the Architect and obtain clarification prior to commencing work.