ISO A1 - 594mm x 841mm

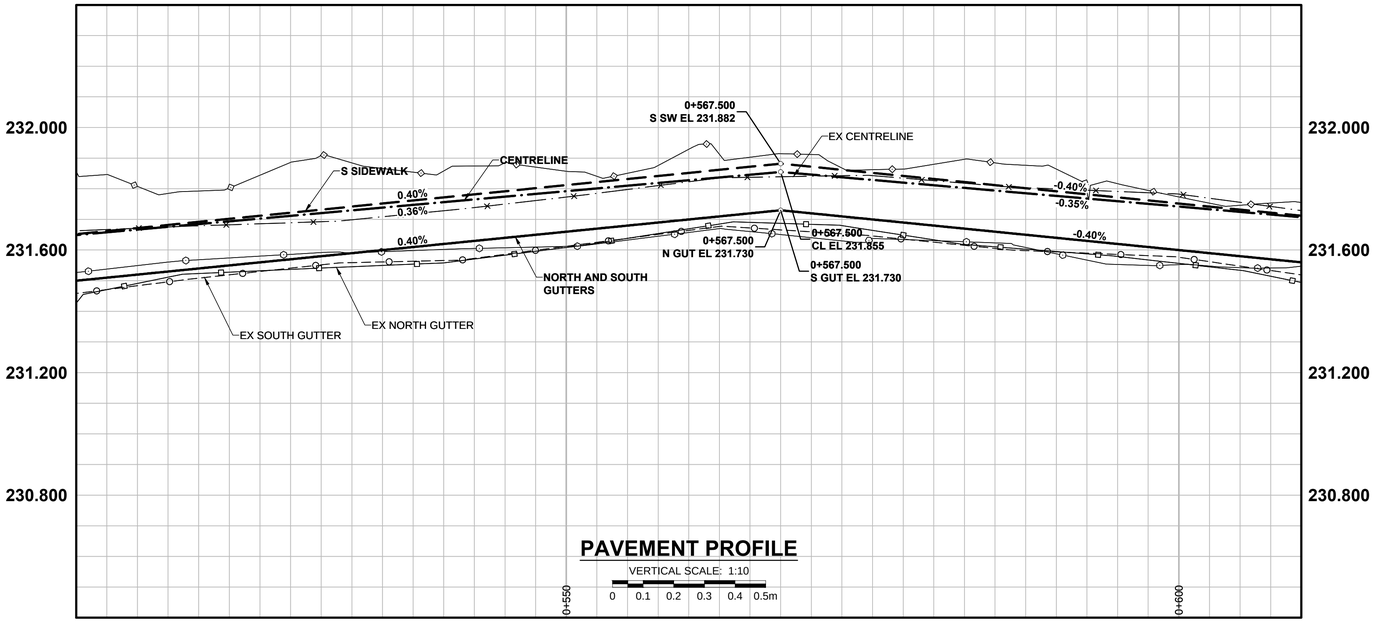

PAVEMENT PROFILE

VERTICAL SCALE: 1:10

0 0.1 0.2 0.3 0.4 0.5m

CHAINAGE
ALONG ℄
PROPOSED PAVEMENT

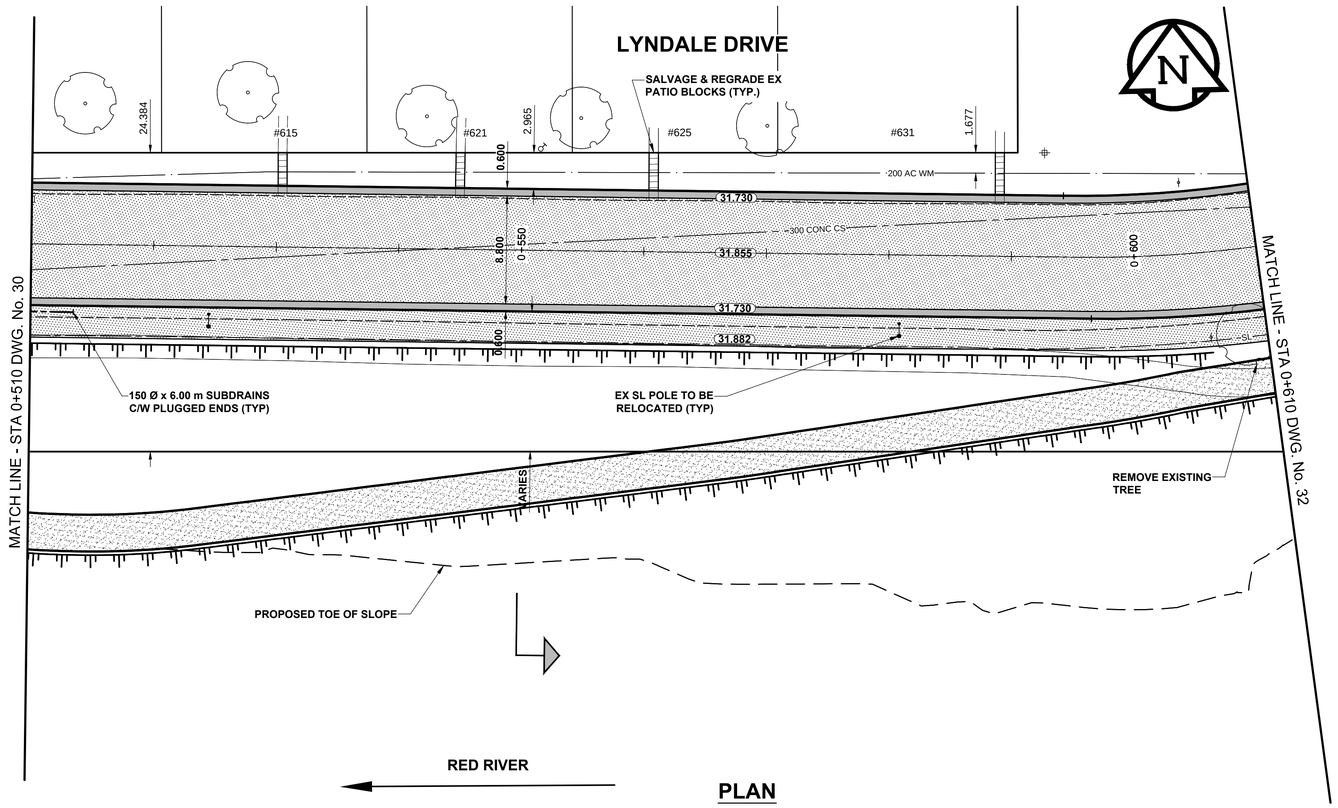

PLAN

SCALE: 1:250

0 5 10 15m

NOTES
1. ADJUST MH AND CB RIMS TO NEW GRADES.
2. CONTRACTOR TO REGRADE/RENEW EXST PRIVATE SIDEWALKS TO LIMITS AS SHOWN. SIDEWALKS TO BE RENEWED WITH CONCRETE UNLESS NOTED OTHERWISE.
3. CONTRACTOR TO TAKE PRECAUTIONARY STEPS AS OUTLINED IN THE SPECIFICATIONS TO PROTECT EXISTING TREES WITHIN THE LIMITS OF CONSTRUCTION FROM DAMAGE FROM CONSTRUCTION ACTIVITIES.
4. MODIFIED BARRIER CURB TO BE CONSTRUCTED AT ALL INTERSECTION RADII, BACK LANE RADII AND BULLNOSES.
5. CONTRACTOR TO CONFIRM THE LOCATION OF ALL UTILITIES/SERVICES IN THE FIELD PRIOR TO CONSTRUCTION.
6. ADD 200.000m TO ABBREVIATED ELEVATIONS TO OBTAIN GEODETIC ELEVATIONS.
7. CB SD-024 OFFSETS ARE DIMENSIONED TO BOC. CB SD-025 OFFSETS ARE DIMENSIONED O/C.
8. ALL DIMENSIONS TO BACK OF CURB.

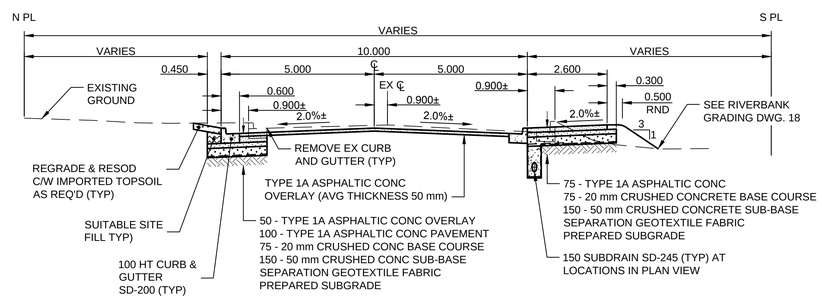

PAVEMENT SECTION

ASPHALT PAVEMENT STRUCTURE
TYPICAL
SCALE: HOR 1:100 VER 1:50

Certificate of Authorization
MORRISON HERSHFIELD
No. 1736

BID OPPORTUNITY No. 721-2016

METRIC

WHOLE NUMBERS INDICATE MILLIMETRES
DECIMALIZED NUMBERS INDICATE METRES

EXISTING	LEGEND - PLAN	NEW	EXISTING	LEGEND - PLAN	NEW	EXISTING	LEGEND - PLAN	NEW
	GAS			MANHOLE			CONCRETE PAVEMENT	
	MTS HANDWELL/PEDESTAL			CATCH BASIN/CATCH PIT			CONC SIDEWALK/MEDIAN	
	HYDRO HANDWELL/CABINET			CURB INLET WITH BOX			ASPHALT PAVEMENT	
	CATV/FIBRE OPTIC			TREE			PAVING STONE	
	TRAFFIC SIGNALS/PIT		TH-12	TEST HOLE			GRAVEL	
	LAND DRAINAGE SEWER			PROPERTY LINE			RAMP CURB	
	SANITARY/COMBINED SEWER			SURVEY BAR			PLANING/REMOVAL	
	CB LEAD/SSP/DCP			FENCE				
	WATERMAIN			BOC/EDGE OF PAVEMENT				
	SUBDRAIN		33.000	ELEVATION	33.333			
	DITCH			TRAFFIC SIGN				

LOCATION APPROVED
UNDERGROUND STRUCTURES

SUPR. U/G STRUCTURES COMMITTEE — DATE

NOTE:
LOCATION OF UNDERGROUND STRUCTURES AS SHOWN ARE BASED ON THE BEST INFORMATION AVAILABLE BUT NO GUARANTEE IS GIVEN THAT ALL EXISTING UTILITIES ARE SHOWN OR THAT THE GIVEN LOCATIONS ARE EXACT. CONFIRMATION OF EXISTENCE AND EXACT LOCATION OF ALL SERVICES MUST BE OBTAINED FROM THE INDIVIDUAL UTILITIES BEFORE PROCEEDING WITH CONSTRUCTION.

BM 34-004
ELEV 229.873m

No.	REVISIONS	YY/MM/DD	BY
C	ISSUED FOR TENDER	16/09/29	JGK
B	ISSUED FOR FINAL REVIEW	16/09/13	JGK
A	ISSUED FOR 75% REVIEW	16/08/17	JGK

MORRISON HERSHFIELD

DESIGNED BY	JGK	CHECKED BY	RPB
DRAWN BY	DID	APPROVED BY	BWB
HOR SCALE	1:250	RELEASED FOR CONSTRUCTION	
VERT SCALE	1:10		
DATE	16/09/06	DATE	

PROFESSIONAL'S SEAL
PROVINCE OF MANITOBA
J.G. KENNEDY
Member
22326
REGISTERED PROFESSIONAL ENGINEER

CONSULTANT FILE NAME
5160047-Lyndale-PP-31.dwg

Winnipeg

THE CITY OF WINNIPEG
PUBLIC WORKS DEPARTMENT
ENGINEERING DIVISION

LYNDALE DRIVE RIVERBANK STABILIZATION AND ASSOCIATED WORKS
MONCK AVENUE TO GAUVIN STREET
ROAD WORKS
HORIZONTAL AND VERTICAL ALIGNMENT
STA 0+510 TO STA 0+610

CITY DRAWING NUMBER: RW751-2016-31
SHEET 31 OF 32
DRAWING No. 31 REV C

M:\Proj\5160047\4 Design\1 Drawings\5 Sheets\Detailed Design\5160047-Lyndale-PP-31.dwg Last Saved: 9/26/2016 5:46 PM by dlane Plotted: 9/28/2016 1:35 PM by Dave Lane