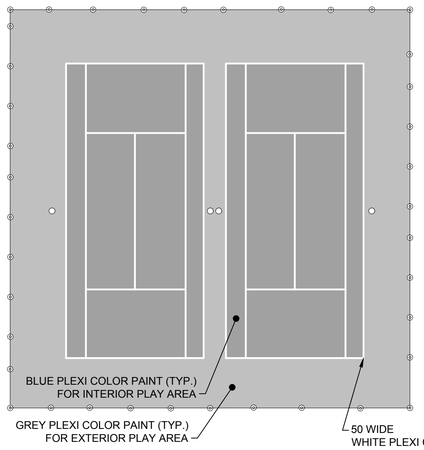

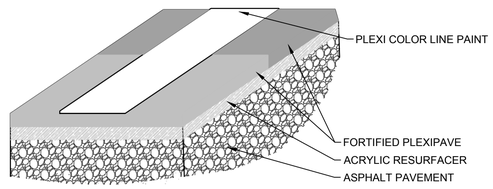

C PLEXIPAVE (TYP.)
Scale: NTS

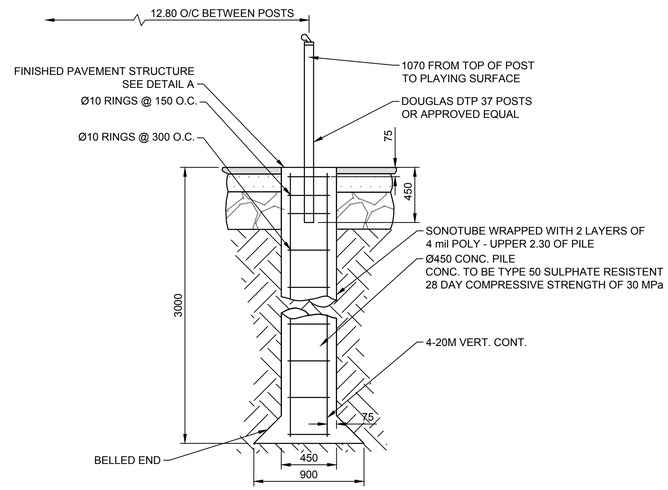

D TENNIS POSTS (TYP.)
Scale: 1:25

WARNING

IF POWER EQUIPMENT OR EXPLOSIVES ARE TO BE USED FOR EXCAVATION ON THIS PROJECT THE CONTRACTOR MUST:

1. NOTIFY THE GAS COMPANY OF THE PROPOSED LOCATION OF EXCAVATION.
2. TAKE PRECAUTION TO AVOID DAMAGE TO GAS COMPANY INSTALLATIONS SEE PROVINCIAL REGULATION 210/72 FOR DETAILS.
3. OBTAIN EXCAVATION PERMITS PRIOR TO CONSTRUCTION.

WHOLE NUMBERS INDICATE MILLIMETRES
DECIMALIZED NUMBERS INDICATE METRES

EXISTING	LEGEND - PLAN	PROPOSED	EXISTING	LEGEND - PLAN	PROPOSED	EXISTING	LEGEND - PROFILE	PROPOSED
150 mm WM	WATERMAIN	150 mm WM		HYDRO			FENCE	
	HYDRANT			MTS				
	VALVE			GRANULAR		150 mm WM	WATERMAIN	
300 mm LDS	LAND DRAINAGE SEWER	300 mm LDS		LIMIT OF ASPHALT			HYDRANT	
250 mm WWS	WASTE WATER SEWER	250 mm WWS		CURB RENEWAL			VALVE	
	MANHOLE			ASPHALT		300 mm LDS	SEWER	300 mm LDS
	CATCH BASIN		31.000	ELEVATIONS	99.892		SOUTH/EAST ℙ	
	CURB INLET			PROPERTY LINE			NORTH/WEST ℙ	
	HYDRO POLES			SURVEY BAR			℄ PROFILE	
	LAMP STANDARD			CURB STOP			SOUTH/EAST GUTTER	
	GAS			RAMP CURB			NORTH/WEST GUTTER	

UNDERGROUND STRUCTURES

SUPV. U/G STRUCTURES COMMITTEE — DATE

NOTE:
LOCATION OF UNDERGROUND STRUCTURES AS SHOWN ARE BASED ON THE BEST INFORMATION AVAILABLE, BUT NO GUARANTEE IS GIVEN THAT ALL EXISTING UTILITIES ARE SHOWN OR THAT THE GIVEN LOCATIONS ARE EXACT. CONFIRMATION OF EXISTENCE AND EXACT LOCATION OF ALL SERVICES MUST BE OBTAINED FROM THE INDIVIDUAL UTILITIES BEFORE PROCEEDING WITH CONSTRUCTION.

B.M.
ELEV.

NO.	REVISIONS	YY/MM/DD	BY
0	ISSUED FOR REVIEW	16/07/27	PRD

URBAN DESIGN DIVISION
PARKS PLANNING & DEVELOPMENT

DESIGNED BY	PRD	CHECKED BY	CRH
DRAWN BY	PRD	APPROVED BY	RGZ
HOR. SCALE:	AS SHOWN	RELEASED FOR CONSTRUCTION	
VERTICAL:	AS SHOWN		
DATE	16/07/27	DATE	

PROFESSIONAL'S SEAL
PRELIMINARY
NOT FOR CONSTRUCTION

CONSULTANT PROJECT NUMBER
N/A

Winnipeg
THE CITY OF WINNIPEG
PLANNING, PROPERTY & DEVELOPMENT DEPARTMENT

2016 PARKS
CAPITAL PROGRAM

DETAIL PLAN

BID OPPERTUNITY NUMBER
688-2016

SHEET 5 OF 5

CITY DRAWING NUMBER
T.7-E

Y:\Design Branch\Projects\2016_10_Linden_Wood_&_Thelma_Ct_Cali_Tennis_Court\0300_drawing\0305_working\sheet_files\UNTHEd-501-2016.dwg