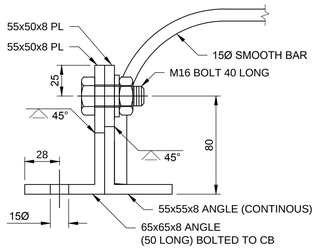

GRATE ATTACHMENT

Scale 1:2.5

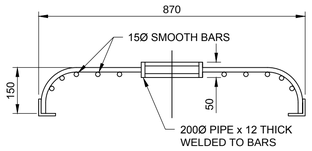

A | SECTION

Scale 1:10

0 250 500

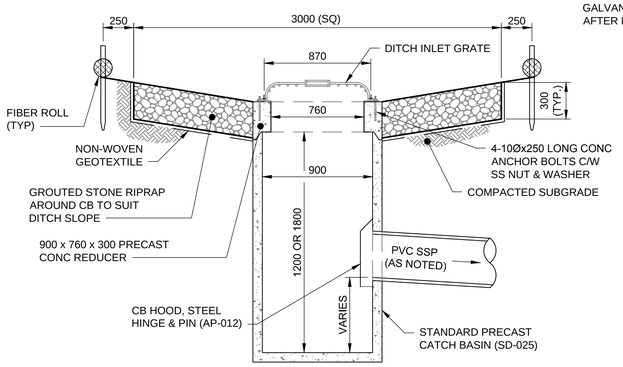

CATCHBASIN

Scale 1:25

0 625 1250

1:25

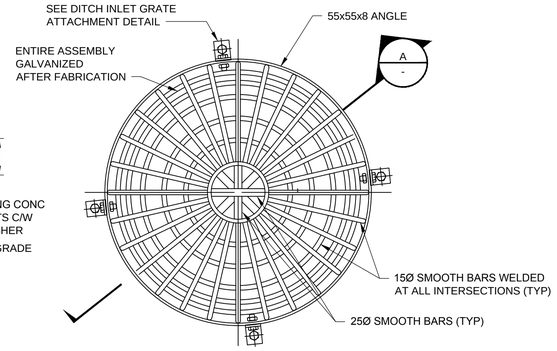

PLAN

GRATE

Scale 1:10

0 250 500

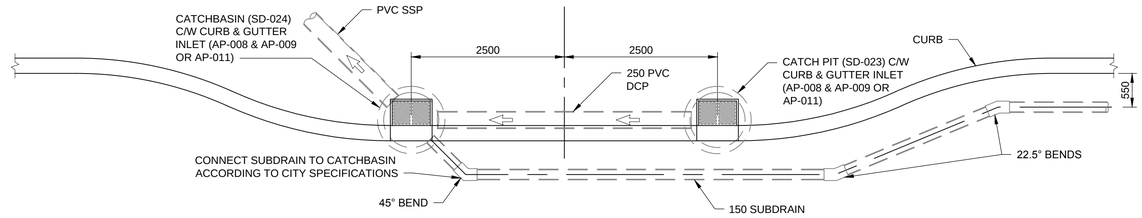

DETAIL - SUBDRAIN CONNECTION TO LDS

DUAL INLET WITH LEADS

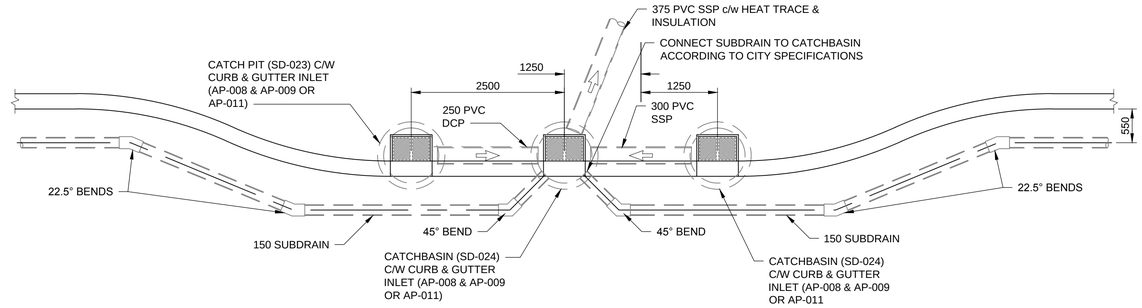

DETAIL - SUBDRAIN CONNECTION TO LDS

MULTIPLE INLETS WITH LEADS

0 1250 2500

1:50

BEEHIVE DITCH INLET

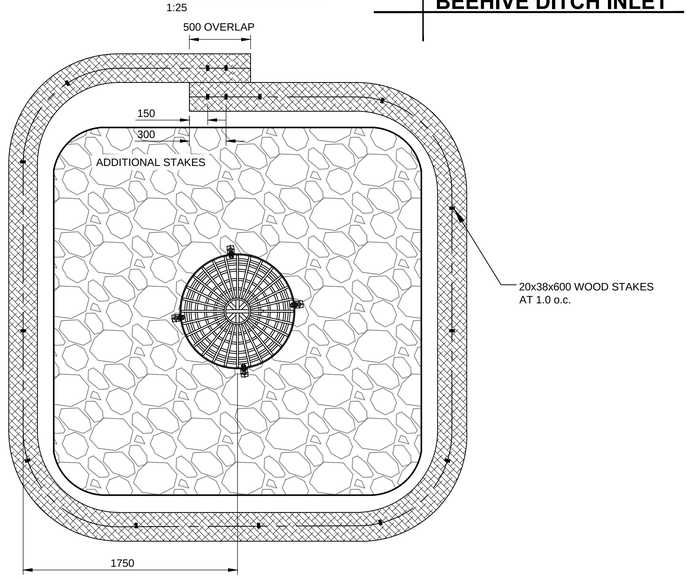

FIBER ROLL AT BEEHIVE DITCH INLET DETAIL

Scale 1:25

0 625 1250

1:25

NOTE:
GRATE, GROUTED STONE RIPRAP & FIBER ROLL DETAILS ALSO
APPLY TO BEEHIVE INLET COVERS AT MANHOLES.

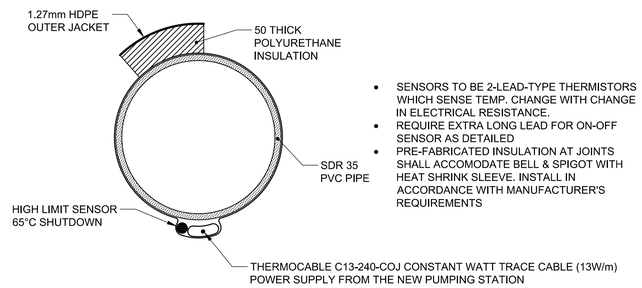

- SENSORS TO BE 2-LEAD-TYPE THERMISTORS WHICH SENSE TEMP. CHANGE WITH CHANGE IN ELECTRICAL RESISTANCE.
- REQUIRE EXTRA LONG LEAD FOR ON-OFF SENSOR AS DETAILED
- PRE-FABRICATED INSULATION AT JOINTS SHALL ACCOMODATE BELL & SPIGOT WITH HEAT SHRINK SLEEVE. INSTALL IN ACCORDANCE WITH MANUFACTURER'S REQUIREMENTS

PRE-INSULATED PVC PIPE DETAIL

Scale: N.T.S.

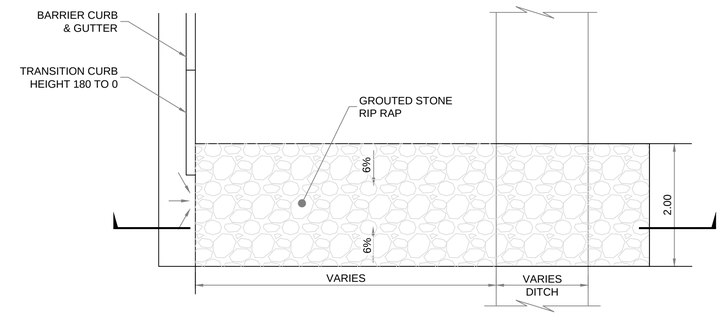

GROUTED RIPRAP CHANNEL

NTS

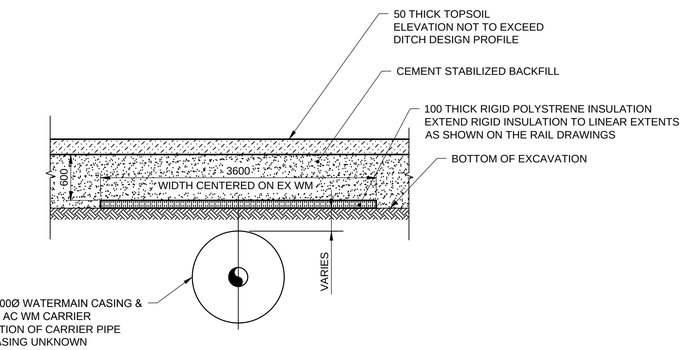

INSULATION DETAIL FOR EX WM UNDER C.N. DITCH

1:40

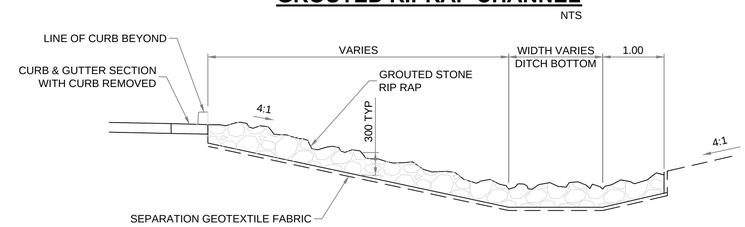

GROUTED RIPRAP CHANNEL SECTION

NTS

METRIC
WHOLE NUMBERS INDICATE MILLIMETRES
DECIMALIZED NUMBERS INDICATE METRES

BID OPPORTUNITY NO. 473-2016

APEGM
Certificate of Authorization
AECOM Canada Ltd.
No. 4671 Date:_____

UNDERGROUND STRUCTURES

SUPV. U/G STRUCTURES DATE

LOCATION OF UNDERGROUND STRUCTURES AS SHOWN ARE BASED ON THE BEST INFORMATION AVAILABLE, BUT NO GUARANTEE IS GIVEN THAT ALL EXISTING UTILITIES ARE SHOWN OR THAT THE GIVEN LOCATIONS ARE EXACT. CONFIRMATION OF EXISTENCE AND EXACT LOCATION OF ALL SERVICES MUST BE OBTAINED FROM THE INDIVIDUAL UTILITIES BEFORE PROCEEDING WITH CONSTRUCTION.

B.M.
ELEV.

NO.	REVISIONS	DATE	BY
0	ISSUED FOR TENDER	17/01/09	WJd

AECOM

DESIGNED BY	MPG	CHECKED BY	
DRAWN BY	KLC	APPROVED BY	
HOR. SCALE	AS NOTED	RELEASED FOR CONSTRUCTION	
VERTICAL	AS NOTED		
DATE	DATE	DATE	

ENGINEER'S SEAL
PROVINCE OF MANITOBA
M.P.A. GAUDREAU
Member 32167
REGISTERED PROFESSIONAL ENGINEER

CONSULTANT PROJECT NUMBER
60321148

Winnipeg

THE CITY OF WINNIPEG
PUBLIC WORKS DEPARTMENT

WAVERLEY STREET UNDERPASS AT CN MILE 3.89 RIVERS SUB
CONTRACT 2: UNDERPASS STRUCTURE, RAILWORKS, ROADWORKS, LAND DRAINAGE SEWER, PUMPING STATION AND LANDSCAPING WORKS

CIVIL UTILITIES MISC DETAILS 1

CITY DRAWING NUMBER
U239-2016-C2-CU-033

SHEET 33 OF 41

CONSULTANT DRAWING NUMBER
C2-CU-033

P:\60321148\900-Work\9100-DD CAD\200-SHEETS\Municipal\163353-C2-CON-CU-Details-001.dwg