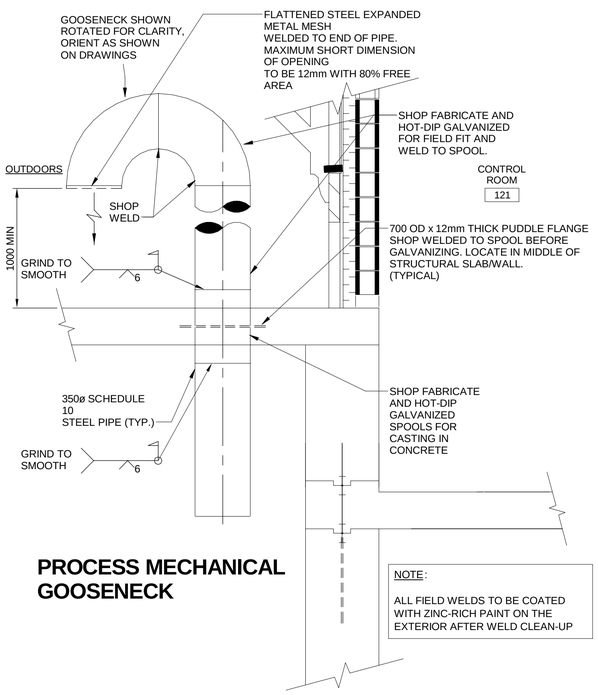

PROCESS MECHANICAL GOOSENECK

NOTE:

ALL FIELD WELDS TO BE COATED WITH ZINC-RICH PAINT ON THE EXTERIOR AFTER WELD CLEAN-UP

DETAIL 1

SCALE: NTS

GOOSENECK VENTS

M-0004

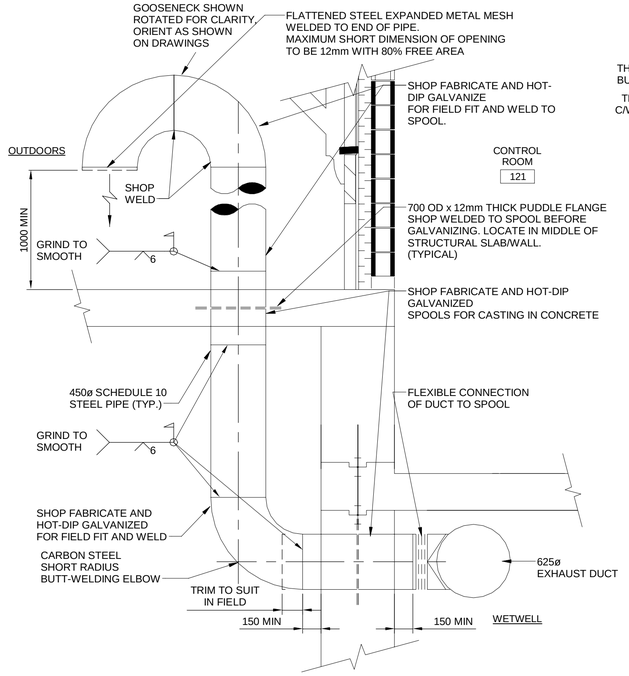

MECHANICAL GOOSENECK

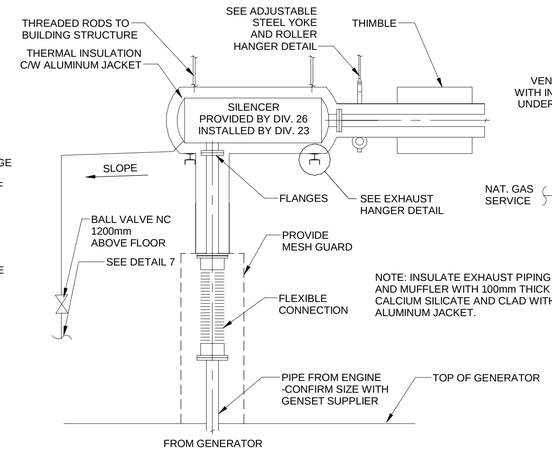

NOTE: INSULATE EXHAUST PIPING AND MUFFLER WITH 100mm THICK CALCIUM SILICATE AND CLAD WITH ALUMINUM JACKET.

DETAIL 2

SCALE: NTS

GENSET EXHAUST

M-0004

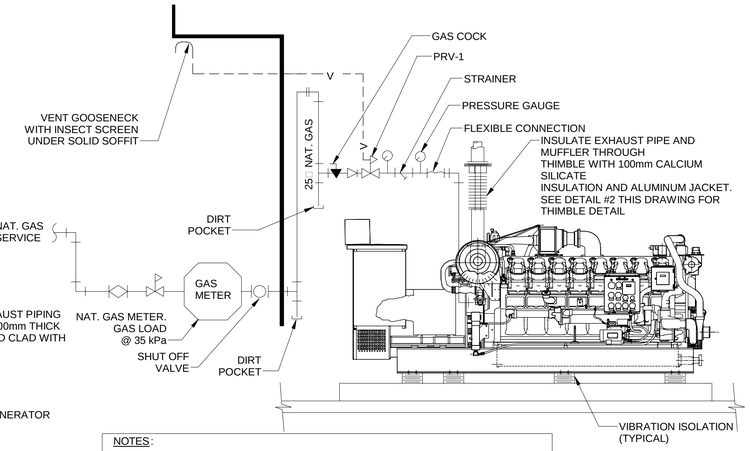

NOTES:

1. STAND BY GENERATOR MOUNTED ON INERTIA BASE & HOUSE KEEPING PAD C/W VIBRATION ISOLATORS.
2. PAINT ALL GAS PIPING WITH 2 COATS OF YELLOW PAINT. IN ACCORDANCE WITH GAS CODE.
3. PROVIDE REGULATOR ON GAS SUPPLY TO GENSET. CONFIRM INLET PRESSURE WITH UTILITY.

DETAIL 3

SCALE: NTS

STAND BY GENERATOR

M-0004

NOTE:

1. ALL PIPES SHALL BE SUPPORTED ON BOTH SIDES OF THE FLOOR.
2. HOT-DIP GALVANIZED SLEEVE ASSEMBLY AFTER WELDING.

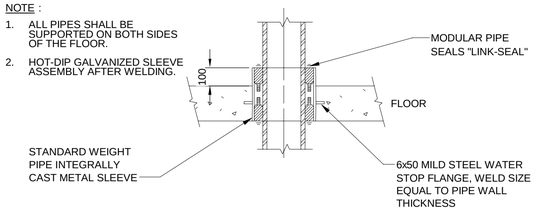

TABLE OF "LINK-SEAL" SERIES FOR STEEL PIPE O.D.
(FOR OTHER SIZES SEE SUPPLIER'S TABLES)

PVC PIPE		WALL SLEEVE	LINK-SEAL	
SIZE	ACTUAL O.D.mm	I.D.mm	LINKS/ SEAL	MODEL NO.
13	21.3	52.5	4	LS-200-C
20	26.7	62.7	6	LS-275-C
25	33.4	62.7	5	LS-200-C
32	42.2	77.9	9	LS-275-C
40	48.3	87.6	5	LS-300-C
50	60.3	102.3	6	LS-300-C
75	88.9	128.2	9	LS-300-C
100	114.3	154.1	11	LS-300-C
125	141.3	202.7	6	LS-425-C
150	168.3	257.1	7	LS-400-C
200	219.1	304.8	12	LS-475-C

APPLICATION NOTES:

1. CONCRETE FLOOR
2. STEEL, STAINLESS STEEL, DUCTILE IRON, PVC OR FRP PIPE; NON-INSULATED.
3. CONDITION
   a) NON-HAZARDOUS TO HAZARDOUS AREAS

DETAIL 4

SCALE: NTS

DOUBLE LINK SEAL FLOOR PENETRATION

M-0004

CASING PIPE SCHEDULE		
WATER PIPE SIZE mm.	CMP SIZE mm.	GAUGE
20 TO 50	300	14

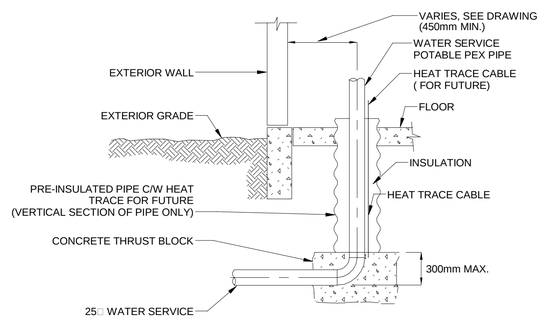

DETAIL 5

SCALE: NTS

WATER SERVICE ENTRANCE

M-0004

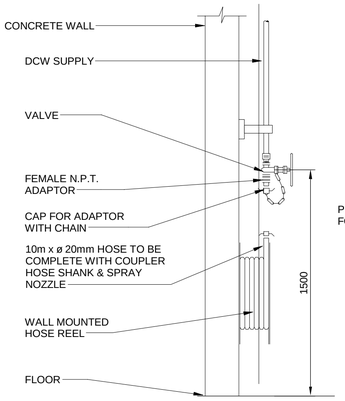

DETAIL 6

SCALE: NTS

HOSE BIBB AND HOSE REEL TYPICAL

M-0004

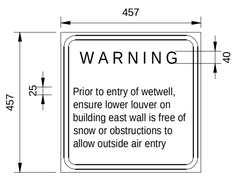

DETAIL 9

SCALE: NTS

WET WELL SIGNAGE TYPICAL

M-0004

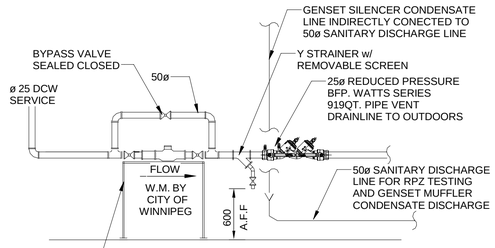

DETAIL 7

SCALE: NTS

WATER METER

M-0004

INSTALL TO CITY STANDARDS

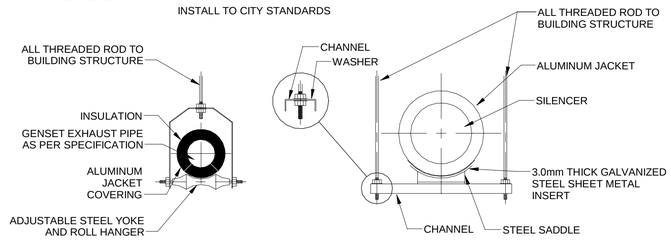

DETAIL 8

SCALE: NTS

GENSET EXHAUST HANGER DETAILS

M-0004

METRIC

WHOLE NUMBERS INDICATE MILLIMETRES

DECIMALIZED NUMBERS INDICATE METRES

APEGM

Certificate of Authorization

AECOM Canada Ltd.

No. 4671 Date:_____

UNDERGROUND STRUCTURES

SUPV. U/G STRUCTURES DATE

LOCATION OF UNDERGROUND STRUCTURES AS SHOWN ARE BASED ON THE BEST INFORMATION AVAILABLE, BUT NO GUARANTEE IS GIVEN THAT ALL EXISTING UTILITIES ARE SHOWN OR THAT THE GIVEN LOCATIONS ARE EXACT. CONFIRMATION OF EXISTENCE AND EXACT LOCATION OF ALL SERVICES MUST BE OBTAINED FROM THE INDIVIDUAL UTILITIES BEFORE PROCEEDING WITH CONSTRUCTION.

B.M. ELEV.

NO.	REVISIONS	DATE	BY
O	ISSUED FOR TENDER	17/01/09	DJP

AECOM

DESIGNED BY	GD	CHECKED BY	BP
DRAWN BY	DJP	APPROVED BY	BP
HOR. SCALE / VERTICAL	AS SHOWN	RELEASED FOR CONSTRUCTION	
DATE	06/01/2016	DATE	

ENGINEER'S SEAL

PROVINCE OF MANITOBA — B.M. PETERSON — REGISTERED PROFESSIONAL ENGINEER

CONSULTANT PROJECT NUMBER

60321148

Winnipeg

THE CITY OF WINNIPEG
PUBLIC WORKS DEPARTMENT

WAVERLEY STREET UNDERPASS AT CN MILE 3.89 RIVERS SUB

CONTRACT 2: UNDERPASS STRUCTURE, RAILWORKS, ROADWORKS, LAND DRAINAGE SEWER, PUMPING STATION AND LANDSCAPING WORKS

PUMPING STATION

MECHANICAL DETAILS AND SCHEMATICS

CITY DRAWING NUMBER: U-239-2016-C2-BM-004

SHEET 4 OF 5

CONSULTANT DRAWING NUMBER: C2-BM-004

P:\60321148\900-Work\910-CAD\99-SUPPORT\PROJECT_TITLE_BLOCKS\Title Block for Pump Station works\163353-XTB-C1-CU.dwg