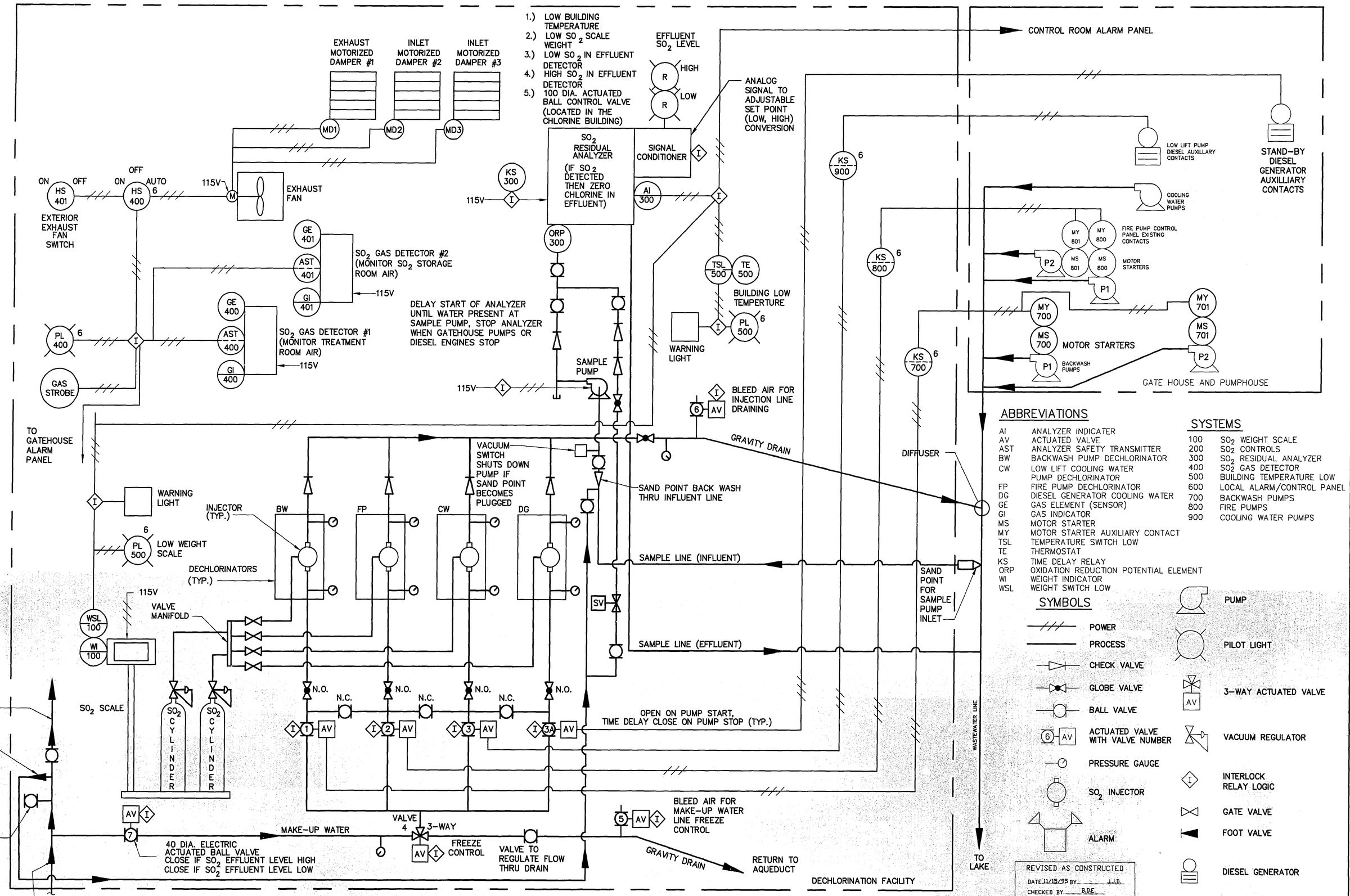

ABBREVIATIONS

AI	ANALYZER INDICATER
AV	ACTUATED VALVE
AST	ANALYZER SAFETY TRANSMITTER
BW	BACKWASH PUMP DECHLORINATOR
CW	LOW LIFT COOLING WATER PUMP DECHLORINATOR
FP	FIRE PUMP DECHLORINATOR
DG	DIESEL GENERATOR COOLING WATER
GE	GAS ELEMENT (SENSOR)
GI	GAS INDICATOR
MS	MOTOR STARTER
MY	MOTOR STARTER AUXILIARY CONTACT
TSL	TEMPERATURE SWITCH LOW
TE	THERMOSTAT
KS	TIME DELAY RELAY
ORP	OXIDATION REDUCTION POTENTIAL ELEMENT
WI	WEIGHT INDICATOR
WSL	WEIGHT SWITCH LOW

SYSTEMS

100	SO_2 WEIGHT SCALE
200	SO_2 CONTROLS
300	SO_2 RESIDUAL ANALYZER
400	SO_2 GAS DETECTOR
500	BUILDING TEMPERATURE LOW
600	LOCAL ALARM/CONTROL PANEL
700	BACKWASH PUMPS
800	FIRE PUMPS
900	COOLING WATER PUMPS

SYMBOLS

- POWER
- PROCESS
- CHECK VALVE
- GLOBE VALVE
- BALL VALVE
- ACTUATED VALVE WITH VALVE NUMBER
- PRESSURE GAUGE
- SO_2 INJECTOR
- ALARM
- PUMP
- PILOT LIGHT
- 3-WAY ACTUATED VALVE
- VACUUM REGULATOR
- INTERLOCK RELAY LOGIC
- GATE VALVE
- FOOT VALVE
- DIESEL GENERATOR

VALVE SEQUENCING

IF DECHLORINATION IS INITIATED
THEN, CLOSE VALVE 6
THEN, OPEN VALVE 4 TO DECHLORINATORS
THEN, OPEN VALVE 5
THEN, OPEN VALVE 1 OR 2 OR 3 OR 3A OR COMBINATION

IF DECHLORINATION IS COMPLETE (IE. TIMED OUT)
THEN, CLOSE VALVE 1 OR 2 OR 3 OR 3A OR COMBINATION
THEN, CLOSE VALVE 5
THEN, OPEN VALVE 4 TO DRAIN
THEN, OPEN VALVE 6

NOTE: VALVE 4 IS 3-WAY WITH PORTING WHICH CLOSES BEFORE OPENING

METRIC

WHOLE NUMBERS INDICATE MILLIMETRES
DECIMALIZED NUMBERS INDICATE METRES

B.M. ELEV.

NO.	REVISIONS	DATE	BY
2	REVISED TO AS BUILT	03/06/97	S.E.H.
1	REVISED TO AS BUILT	11/15/95	J.J.D.

IDE I.D.ENGINEERING CANADA INC. Professional Engineers WINNIPEG, MANITOBA in association with R&D Engineering

DESIGNED BY	W.M.S. / J.F.H.	CHECKED BY	M.W.W.
DRAWN BY	V.B.S. / R.A.G.	APPROVED BY	B.L.F.
HOR. SCALE / VERTICAL	NOT TO SCALE	RELEASED FOR CONSTRUCTION	
DATE:	FEBRUARY 1994	DATE	

ENGINEER'S SEAL: STATE OF NEW YORK — ORIGINAL STAMPED BY RICHARD L. SAN GIACOMO 05/04/94 — REGISTERED ENGINEER

MANITOBA LICENCE NO. 91-93 EXPIRES AUGUST 31, 1994

IB-28-515-ZM-AB

THE CITY OF WINNIPEG

WORKS AND OPERATIONS DIVISION
WATERWORKS WASTE AND DISPOSAL DEPARTMENT

SHOAL LAKE INTAKE FACILITY
ZEBRA MUSSEL CONTROL SYSTEM

DECHLORINATION SYSTEM PROCESS AND INSTRUMENTATION DIAGRAM

CITY DRAWING NUMBER
SHEET 18 OF 154
D-3820

FILE: C:\ACAD\SHOAL LAKE\D-3820.DWG 04/28/98 1:53pm DID