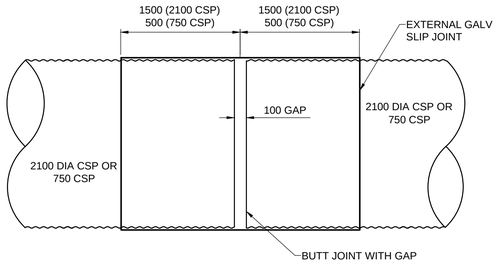


1 EXTERNAL SLIP JOINT
NTS

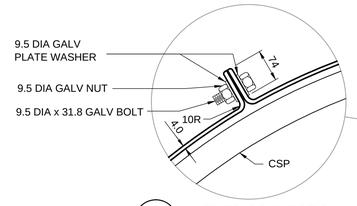


3 FIXED CONNECTION
- 2 REQ'D @ 120° ORIENTATION (2000 CSP)
- 1 REQ'D @ 180° ORIENTATION (750 CSP)

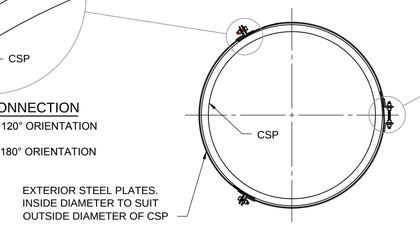


2 SECTION THROUGH SLIP JOINT
1 : 25

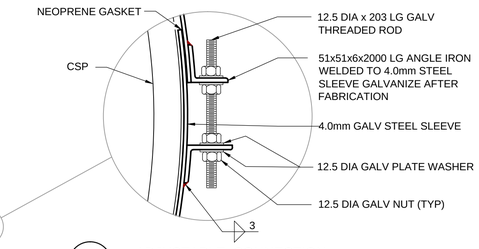


4 ADJUSTABLE CONNECTION

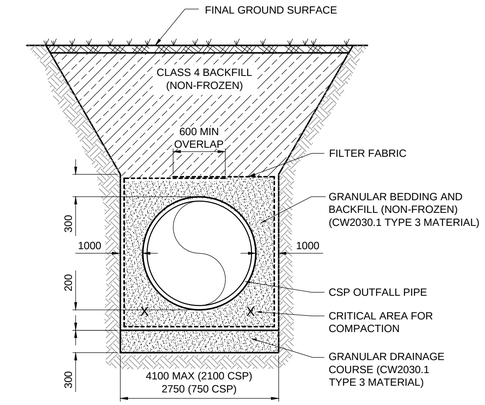


5 CSP TRENCH
NTS

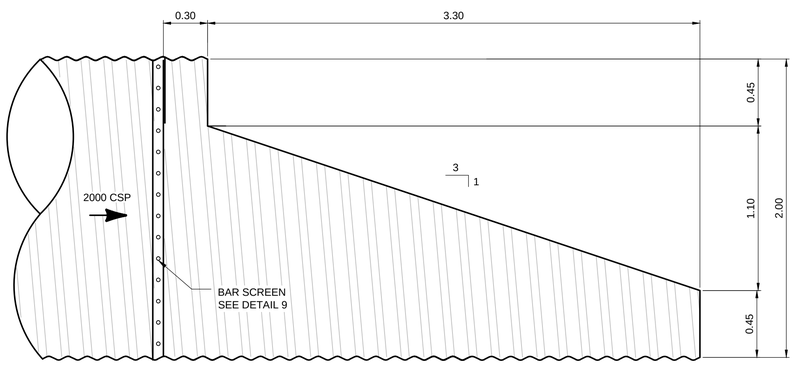


6 CULVERT STEP BEVEL DETAIL 2000 CSP
1 : 20

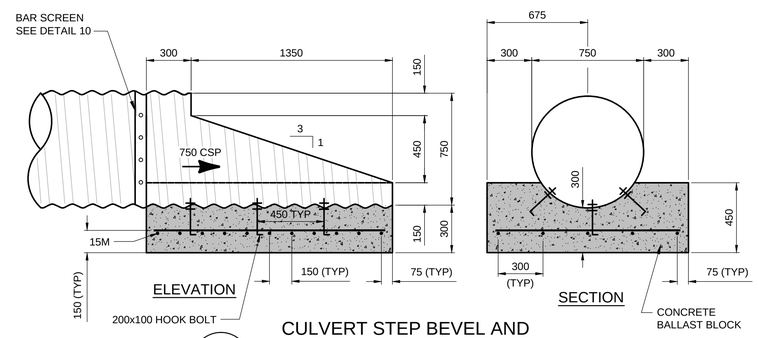


7 CULVERT STEP BEVEL AND BALLAST BLOCK DETAIL 750 CSP
1 : 20

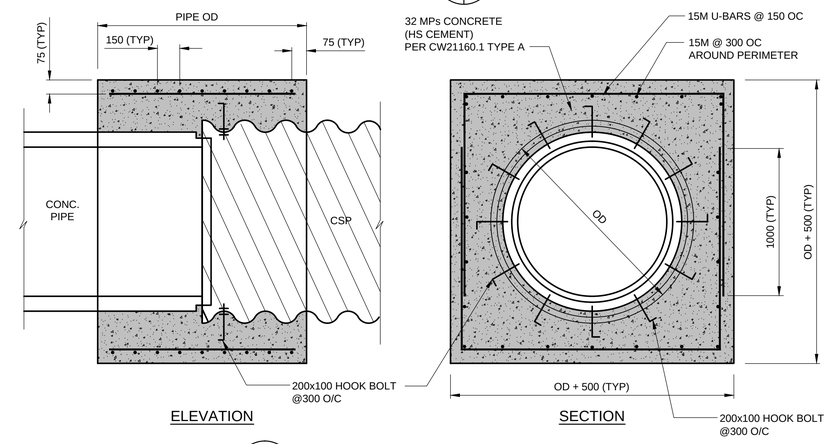


8 CONCRETE COLLAR
1 : 50

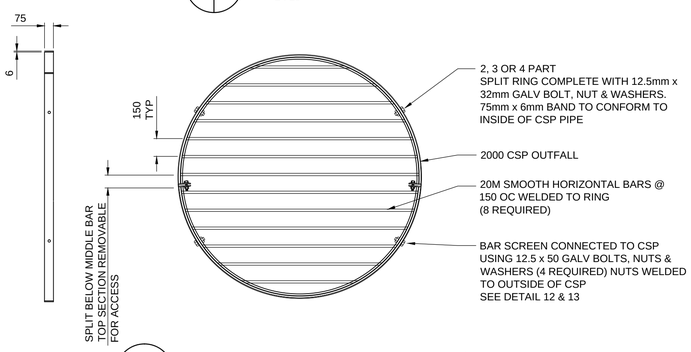


9 BAR SCREEN (FOR 2000 CSP)
1 : 25
GALVANIZE AFTER FABRICATION

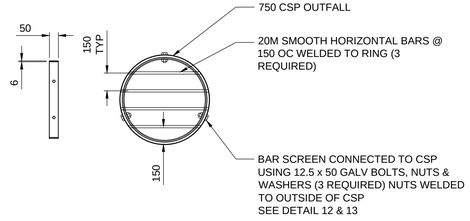


10 BAR SCREEN (FOR 750 CSP)
1 : 25
GALVANIZE AFTER FABRICATION

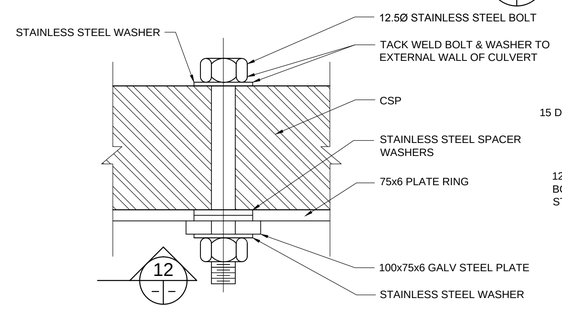


11 BAR SCREEN BOLTING DETAIL
NTS

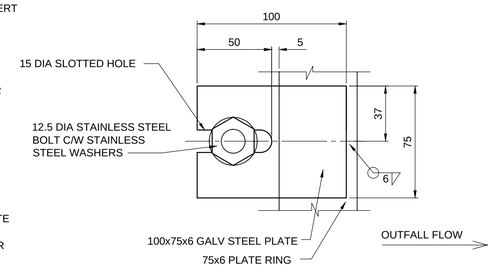


12 BAR SCREEN REMOVAL PLATE DETAIL
NTS

APEGM
Certificate of Authorization
TETRA TECH WEI Inc.
No. 5313 Date: April 30, 2016

| NO. | REVISIONS | DATE | BY |
|---|---|---|---|
| 0 | ISSUED FOR TENDER | 15.09.24 | KJM |

B.M.
ELEV.

TETRA TECH

| | | | |
|---|---|---|---|
| DESIGNED BY | KJM | CHECKED BY | KJM |
| DRAWN BY | GMD | APPROVED BY | EFS |
| HOR. SCALE: / VERTICAL: | AS NOTED | ACCEPTED BY / DATE | ORIGINAL DRAWING SIGNED BY: D.N. BURMEY, P.ENG. 15.09.24 |
| DATE | 15.09.24 | D.N. BURMEY, P.ENG. BRIDGE PROJECTS ENGINEER | |

PROVINCE OF MANITOBA
K.J. McRAE
ORIGINAL SIGNED 15.09.24
REGISTERED PROFESSIONAL ENGINEER

CONSULTANT DRAWING NO.
1400070800-DWG-C0062

Winnipeg
THE CITY OF WINNIPEG
PUBLIC WORKS DEPARTMENT
ENGINEERING DIVISION

NESS AVENUE AT STURGEON CREEK
BRIDGE CONSTRUCTION

OUTFALL DETAILS

CITY DRAWING NUMBER
P-3465-15-015
SHEET 62 OF 64

62