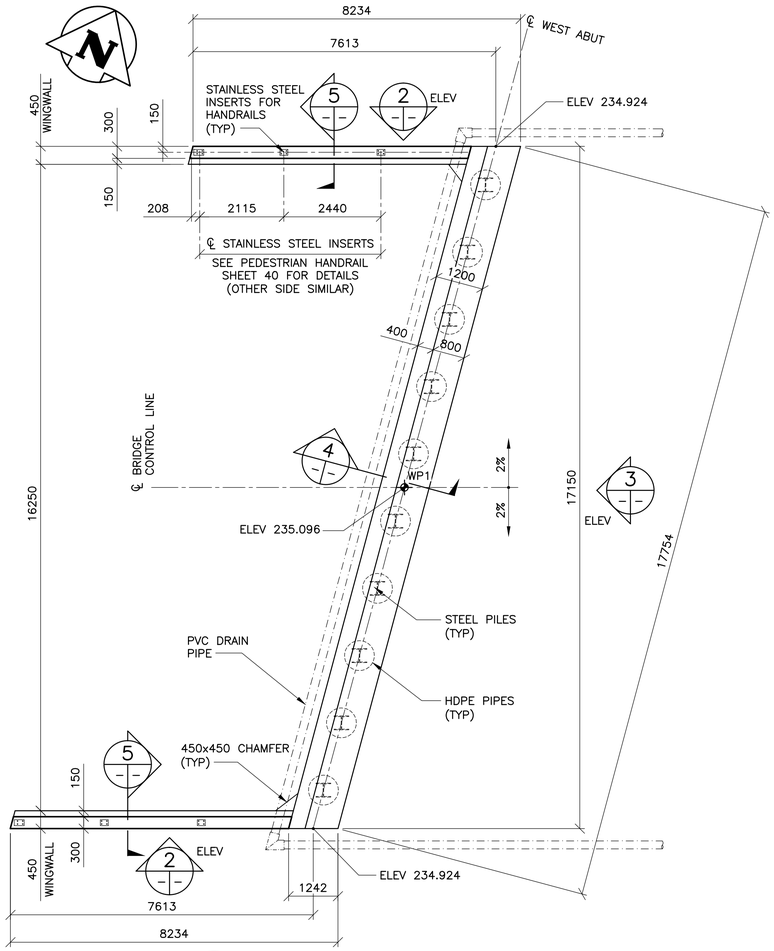

1 WEST ABUTMENT – PLAN
1 : 75

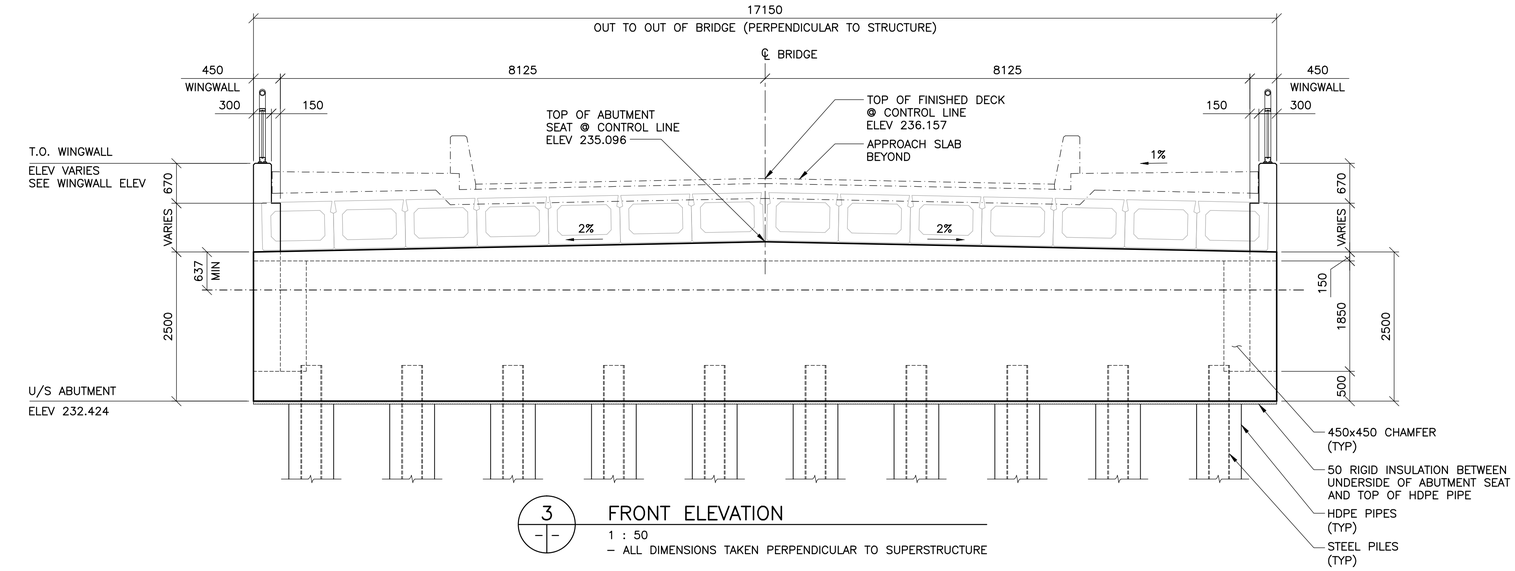

3 FRONT ELEVATION
1 : 50
– ALL DIMENSIONS TAKEN PERPENDICULAR TO SUPERSTRUCTURE

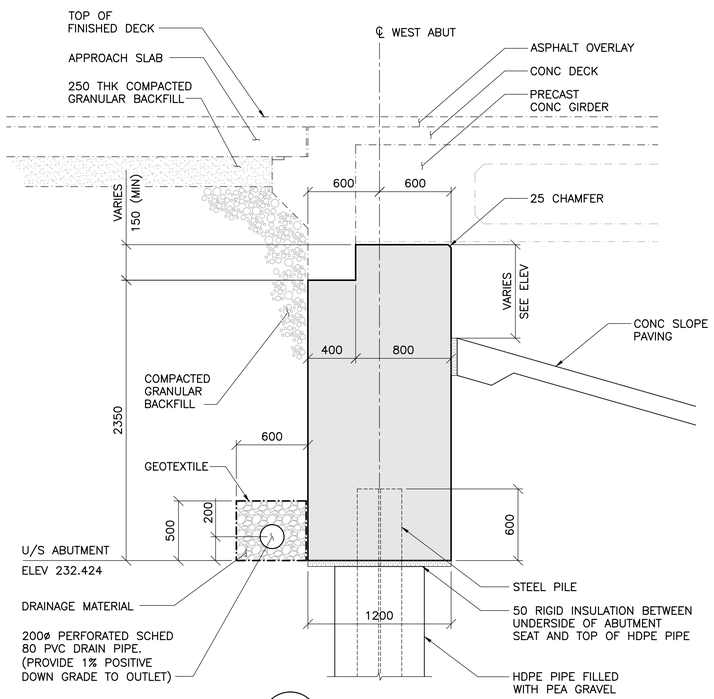

4 SECTION
1 : 25

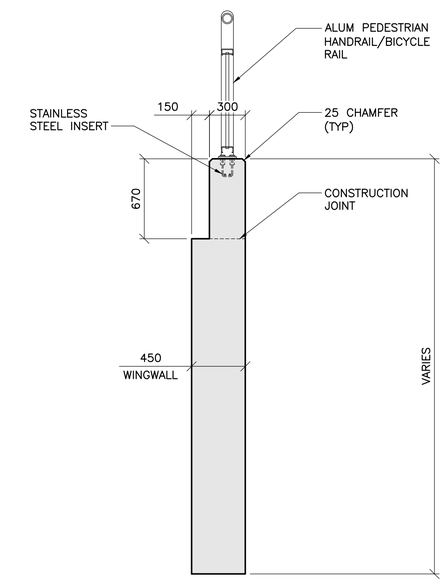

5 SECTION
1 : 25

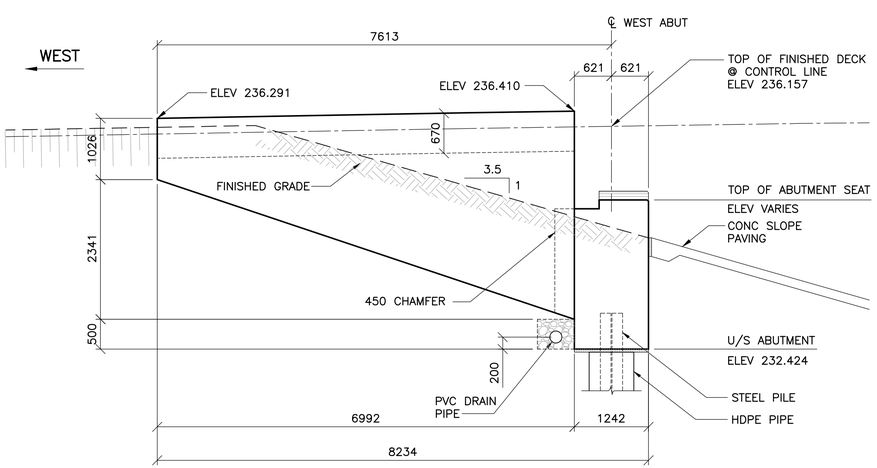

2 WINGWALL ELEVATION
1 : 50

APEGM
Certificate of Authorization
TETRA TECH WEI Inc.
No. 5313 Date: April 30, 2016

NO.	REVISIONS	DATE	BY
	B.M. ELEV.		
0	ISSUED FOR TENDER	15.09.24	S.A.

TETRA TECH

DESIGNED BY	D.M.	CHECKED BY	S.A.
DRAWN BY	G.I.	APPROVED BY	E.F.S.
HOR. SCALE: / VERTICAL:	AS NOTED	ACCEPTED BY / DATE	ORIGINAL DRAWING SIGNED BY: D.N. BURMEY, P.ENG. 15.09.24
DATE	15.09.24		D.N. BURMEY, P.ENG. BRIDGE PROJECTS ENGINEER

S.Y.I. AWAD
ORIGINAL SIGNED
15.09.24
31981

CONSULTANT DRAWING NO.
1400070800-DWG-S0016

Winnipeg

THE CITY OF WINNIPEG
PUBLIC WORKS DEPARTMENT
ENGINEERING DIVISION

NESS AVENUE AT STURGEON CREEK
BRIDGE CONSTRUCTION

CITY DRAWING NUMBER: B243-15-016
SHEET 16 OF 64

WEST ABUTMENT
CONCRETE DETAILS

16