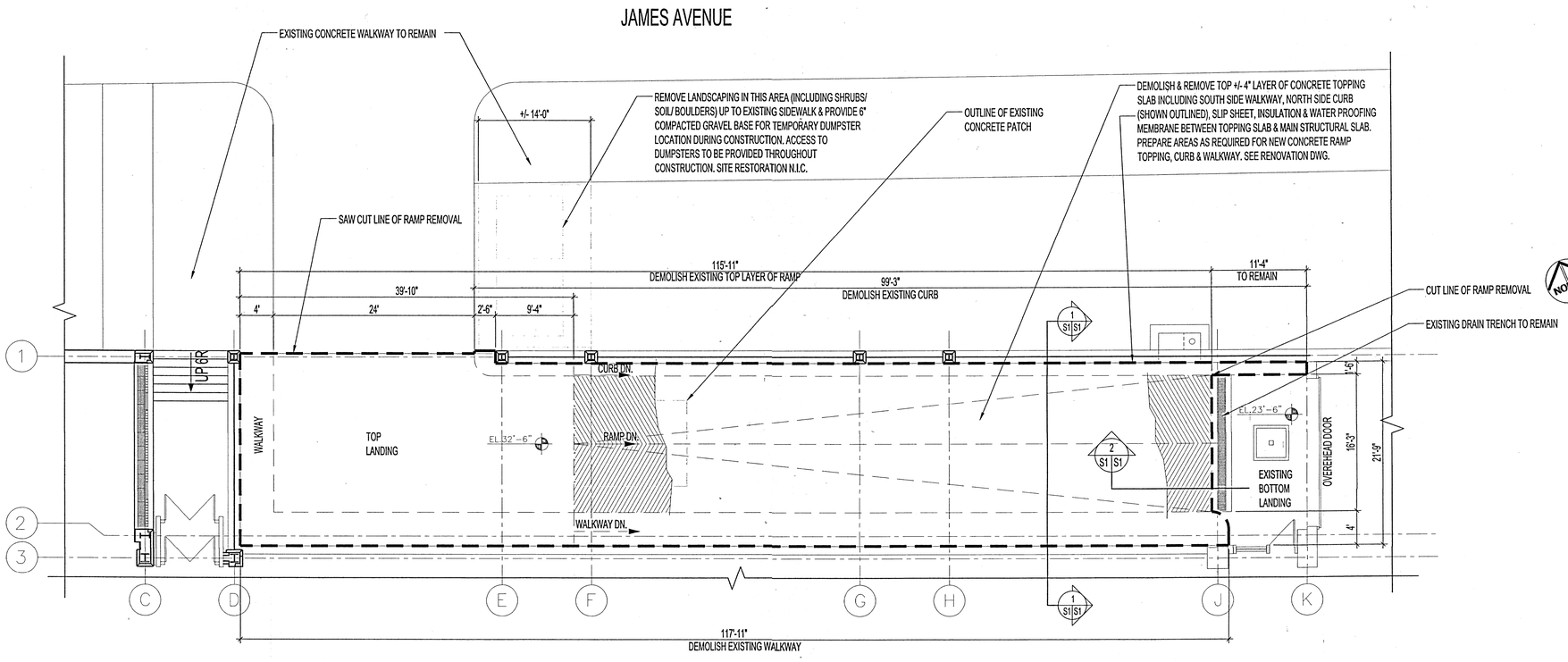

LOADING RAMP -DEMOLITION PLAN

SCALE: 1/8"=1'-0"

0 2' 4' 6' 8' 10' 16'

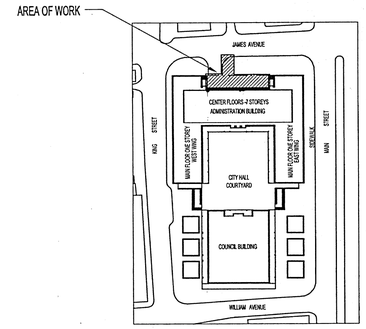

KEY PLAN
SCALE: N.T.S.

NOTES :

THESE DRAWINGS SHALL NOT BE SCALED.

THE CONTRACTOR SHALL VISIT THE SITE AND SATISFY ONESELF ALL DIMENSIONS, DATUM, AND DETAILED INFORMATION SHOWN ARE CORRECT.

ALL PRODUCTS AND MATERIALS TO BE USED AND INSTALLED SHALL CONFORM WITH MANUFACTURER'S SPECIFICATIONS & APPLICABLE CODES.

THE CONTRACTOR SHALL BE RESPONSIBLE TO PATCH AND MAKE GOOD ALL EXISTING CONSTRUCTION AFFECTED BY THE REMOVAL OF ALL ITEMS FORMING THE PART OF THE RENOVATION WORK.

ALTHOUGH IT IS ASSUMED THAT THERE ARE NO ELECTRICAL OR MECHANICAL SERVICES AFFECTED BY THIS DEMOLITION, THE CONTRACTOR SHALL MAKE ALLOWANCE FOR ANY THAT ARE ENCOUNTERED.

JACK HAMMERING FOR DEMOLITION IS NOT ALLOWED BETWEEN THE HOURS OF 8:00AM TO 5:00PM, MONDAY TO FRIDAY.

PRIOR TO DEMOLITION, CONTRACTOR IS TO SURVEY THE RAMP TO ESTABLISH START POINT OF RAMP AND ALL CRITICAL ELEVATIONS TO ENSURE NEW TOPPING SLAB MATCHES EXISTING SLOPE.

CONTRACTOR SHALL PROVIDE DUST CONTROL AS REQUIRED TO ALLOW PUBLIC ACCESS THROUGH DOORS IMMEDIATELY WEST & EAST OF THE RAMP.

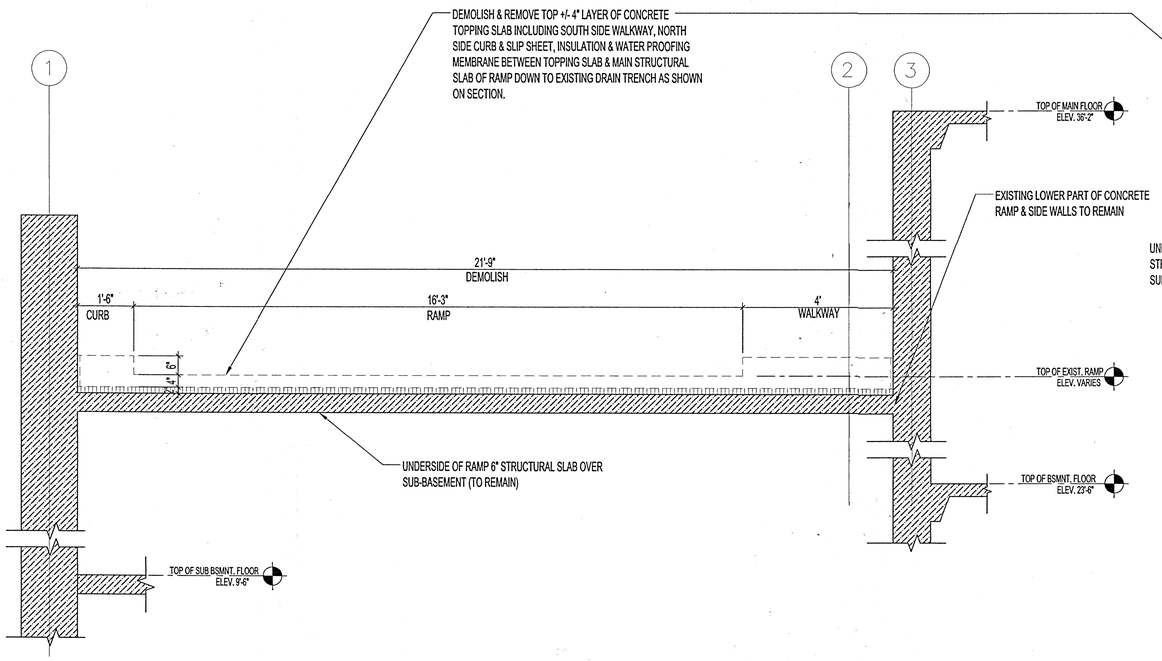

1 S1 S1 SECTION-LOADING RAMP DEMOLITION
SCALE: 1/2"=1'-0"

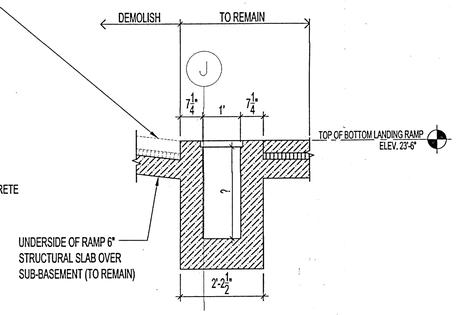

2 S1 S1 SECTION-LOADING RAMP DEMOLITION @ BTM. LANDING
SCALE: 1/2"=1'-0"

NO.	REVISION/DESCRIPTION	BY	DATE

SEALS

PROVINCE OF MANITOBA B.D. NOVAK Oct 21/13 REGISTERED PROFESSIONAL ENGINEER

DRAWN BY	MMK	DESIGNED	APPROVED
DATE	2013.09.27	USER APPROVAL	

Winnipeg

CITY OF WINNIPEG
PLANNING, PROPERTY AND DEVELOPMENT DEPARTMENT
MUNICIPAL ACCOMMODATIONS DIVISION
300 – 65 GARRY ST. R3C 4K4

PROJECT

CITY HALL -ADMINISTRATION BUILDING
LOADING RAMP REPAIRS
& RECONSTRUCTION
510 MAIN STREET

SHEET TITLE

PARTIAL MAIN & BASEMENT FLOOR PLAN
RAMP DEMOLITION PLAN & SECTIONS

SCALE	PROJECT NO.	SHEET NO.
AS SHOWN	2013-090	S1

DRAWING SHEET SIZE: A1 (841mm x 594mm) PLOT 1:1

ADDRESS: 510 MAIN STREET PROJECT No: DESCRIPTION: PARTIAL MAIN & BASEMENT FLOOR PLAN DATE: 2013.09.27 FILE NAME: 2013090V0.dwgS1