FILE NAME: 20130101V0.dwg\A4

DATE: 2013.09.13

SHEET TITLE:

PROJECT No: 2013-101

ADDRESS: 1155 PACIFIC AVENUE

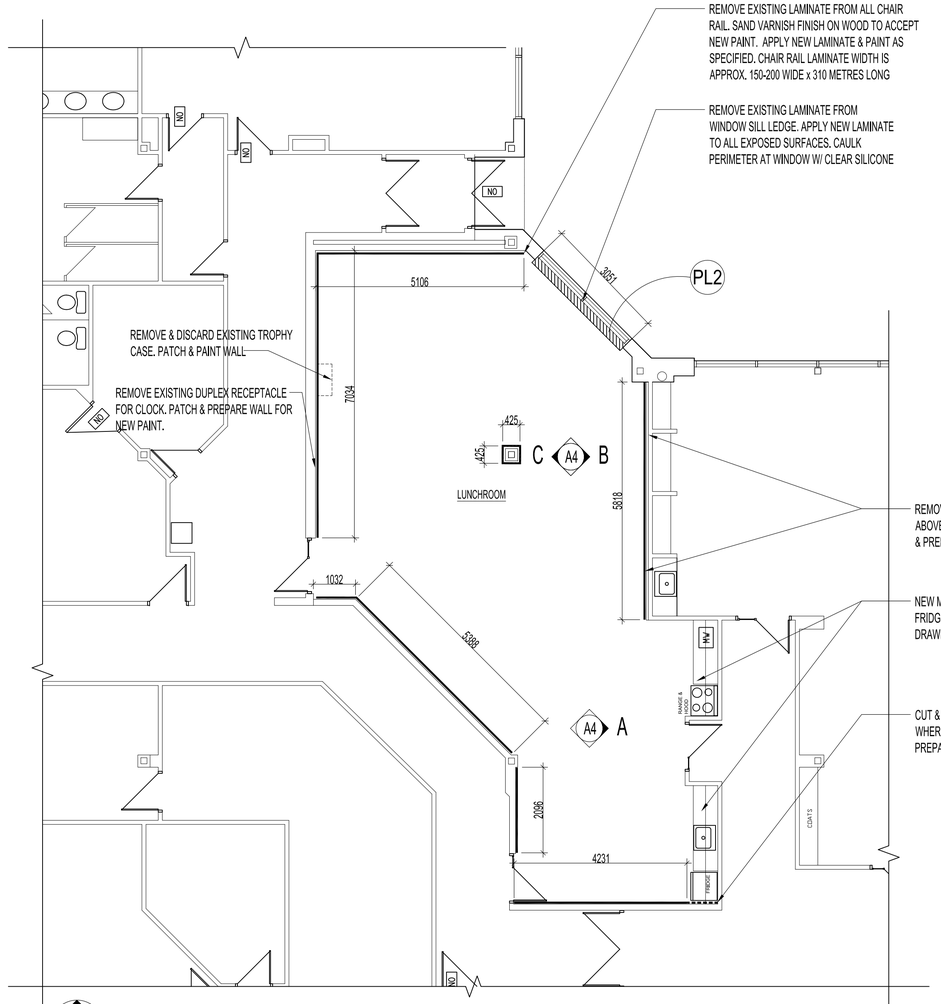

PARTIAL MAIN FLOOR PLAN - LUNCH ROOM RENOVATIION
SCALE 1:75

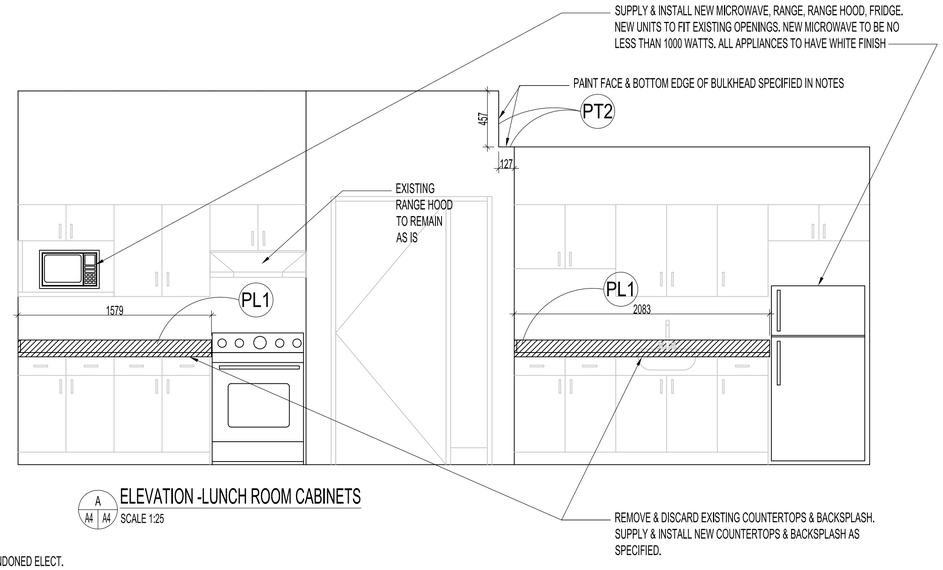

A / A4 A4 ELEVATION -LUNCH ROOM CABINETS
SCALE 1:25

NOTES:

STANDARDS OF MATERIAL AND QUALITY OF CONSTRUCTION TO MEET AWMAC STANDARDS.

PROVIDE SHOP DRAWINGS FOR MILLWORK.

PT1 ALL WALLS FOR LUNCH ROOM ARE TO BE PAINTED FIELD COLOUR (UNLESS NOTED OTHERWISE ON PLAN & ELEVATIONS)

FIELD COLOUR -BENJAMIN MOORE
"SNOW WHITE" 2122-70 PEARL FINISH

PT2 ACCENT COLOUR –BENJAMIN MOORE
"OXFORD GREY" 2128-40 PEARL FINISH
-PAINT ALL WALLS NOTED AND UNDER ALL CHAIR RAILS WITH ACCENT COLOUR

PL1 NEW COUNTERTOPS & 4" BACKSPLASH FOR LUNCHROOM TO BE PIONITE AG 291 SUEDE "GREY SANTOS"
-PROVIDE CLEAR SILICONE CAULKING AROUND PERIMETER.

PL2 NEW LAMINATE FOR CHAIR RAILS, COLUMN BASE & WINDOW SILL FOR LUNCHROOM TO BE HOMAPAL 431/310

FP4 NEW FEATURE PANEL 1220 x 1220 TO BE ANCHORED W/ CHROME METAL STAND-OFFS.

3FORM VARIA ECORESIN -PLAY -PAPER LANE, PATTERN LINEAR, PRICE GROUP C, GAUGE 3/8". **NOTE:** SIZES VARY, SEE ELEVATIONS

NOTE: ADDITIONAL FEATURE PANELS LOCATED ON DWG A3.2 & A4

CHROME METAL STAND-OFFS TO BE MUSTANG SYSTEMS NO. 2022 WALL MOUNTED PIERCING FIXING 2mm TO 12mm. 18.5mm DIA. 22mm PROJECTION PANEL REQUIRES 11mm DIA. HOLES. FOUR FIXINGS PER PANEL REQUIRED.

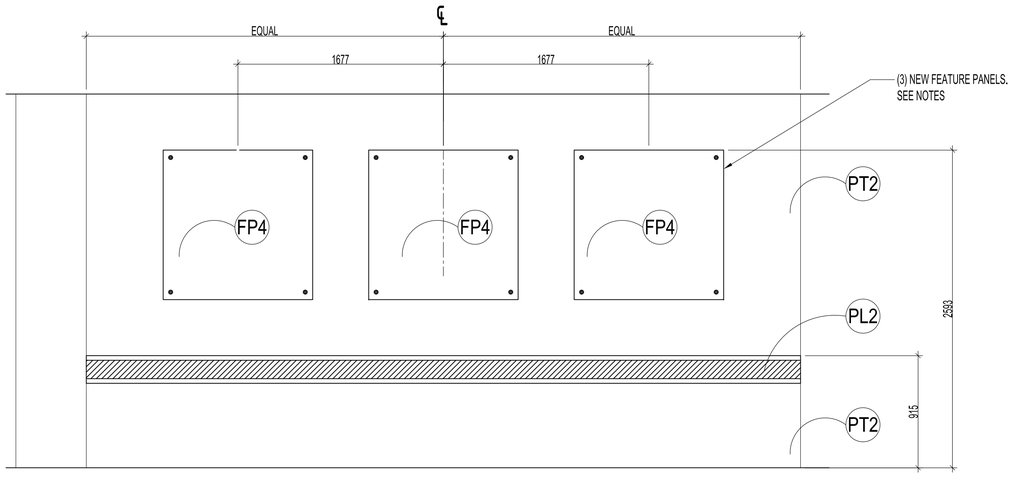

B / A4 A4 ELEVATION -FEATURE WALL
SCALE 1:25

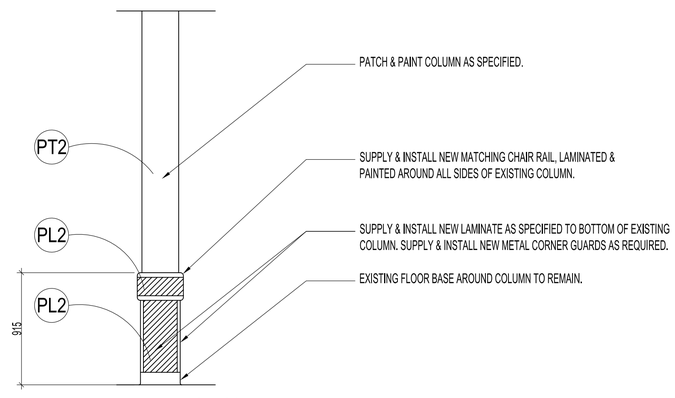

C / A4 A4 ELEVATION -COLUMN
SCALE 1:25

No.	REVISION/DESCRIPTION	BY	DATE

SEAL

DRAWN MMK	CHECKED	DESIGNED	APPROVED
DATE 2013.09.13	USER APPROVAL		

Winnipeg

THE CITY OF WINNIPEG
PLANNING, PROPERTY AND DEVELOPMENT DEPARTMENT
MUNICIPAL ACCOMMODATIONS DIVISION
3–65 GARRY STREET, R3C 4K4

PROJECT
WASTE WATER SERVICES
ALTERATIONS TO WASTE WATER OFFICE AREAS
1155 PACIFIC AVENUE

SHEET TITLE
PARTIAL MAIN FLOOR PLAN (1155 PACIFIC)
LUNCHROOM RENOVATION

SCALE	PROJECT No:	SHEET No:
AS SHOWN	2013-101	A4

DRAWING SHEET SIZE: A1 (841mm x 594mm) PLOT 1:1