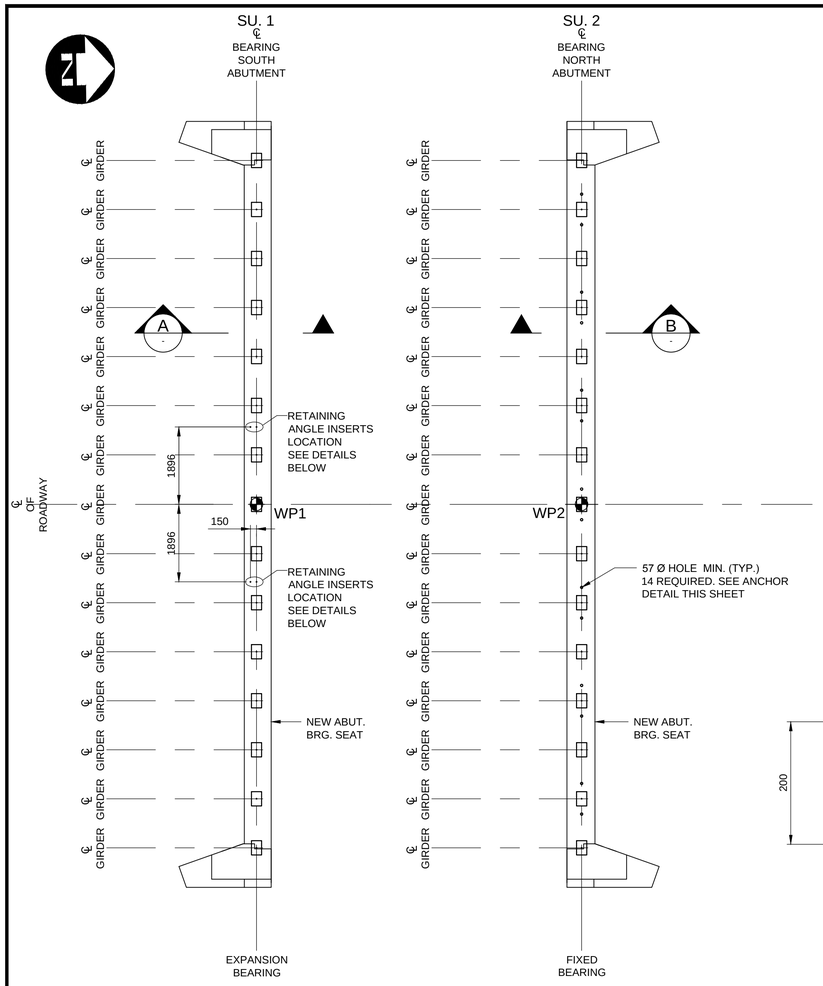


## BEARING LAYOUT
1: 75

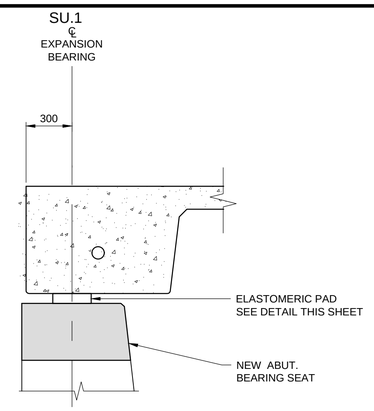


EXPANSION BEARING

## A SECTION
1: 20

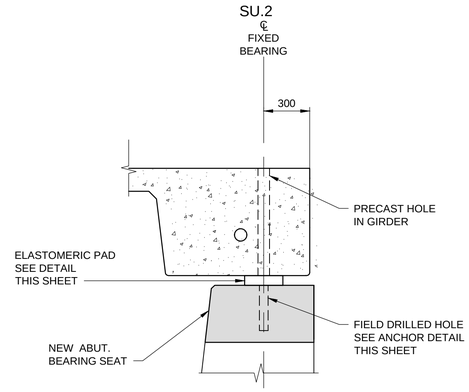


FIXED BEARING

## B SECTION
1: 20

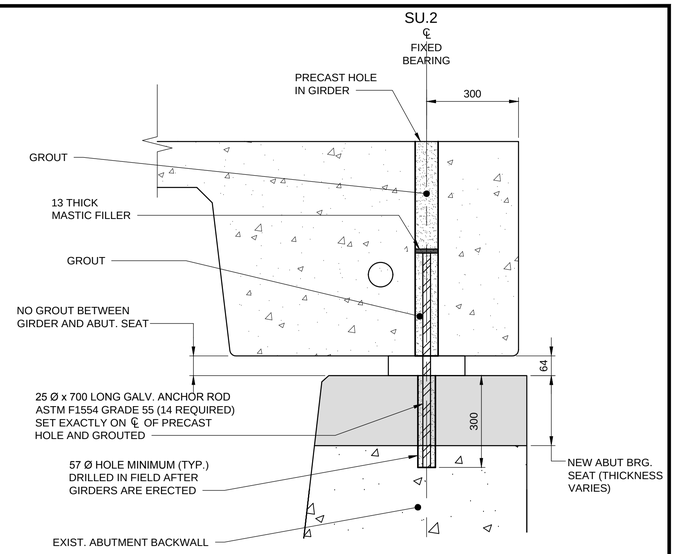


## ANCHOR DETAIL
1: 10

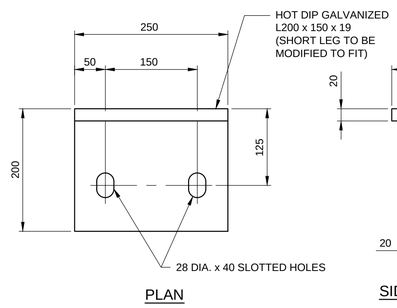


PLAN

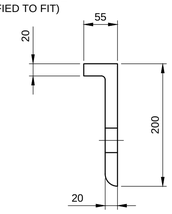


SIDE VIEW

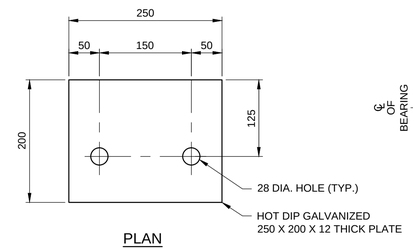


PLAN

## RETAINING ANGLE DETAIL
1: 5

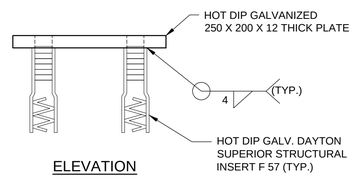


ELEVATION

## ANCHOR PLATE DETAIL
1: 5

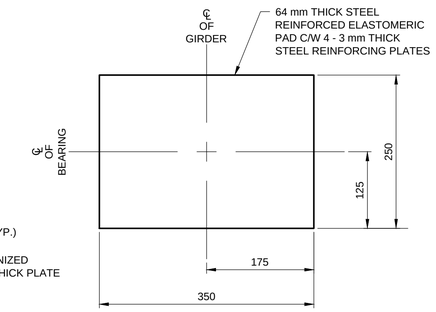


## PLAN
1: 5

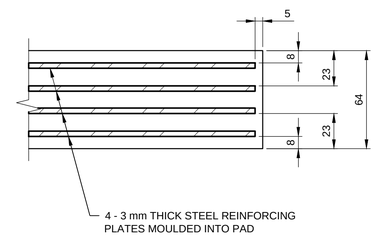


## PART CROSS SECTION
1: 2

## ELASTOMERIC PAD

NOTES:

1. ELASTOMER SHALL BE NEOPRENE OR NATURAL RUBBER. IN ACCORDANCE WITH AASHTO LOW TEMPERATURE GRADE 4 TO 5 WITH A MINIMUM SHEAR MODULUS G > 0.9 MPa AND A 60 DUROMETER SHORE A HARDNESS.
2. INTERNAL STEEL REINFORCING PLATES SHALL BE ROLLED MILD STEEL WITH A MINIMUM YIELD STRENGTH OF 230 MPa.
3. BEARING WITH STEEL LAMINATES SHALL BE CAST AS A UNIT IN A MOULD AND SHALL BE BONDED AND VULCANIZED UNDER HEAT AND PRESSURE. BEFORE PLACEMENT STEEL LAMINATES SHALL BE SANDBLASTED AND CLEANED OF ALL SURFACE COATINGS, RUST, MIL SCALE AND DIRT BEFORE BONDING AND SHALL BE FREE OF SHARP EDGES AND BURRS.
4. FLASH TOLERANCE, FINISH AND APPEARANCE OF THE ELASTOMERIC BEARING SHALL MEET THE REQUIREMENTS OF THE LATEST EDITION OF RUBBER HANDBOOK, PUBLISHED BY THE RUBBER MANUFACTURER'S ASSOCIATION, INC., RMA F3 AND RMA T.063 FOR MOULDED BEARINGS.
5. THREADS OF STRUCTURAL INSERTS TO BE RE-TAPPED AFTER GALVANIZING.

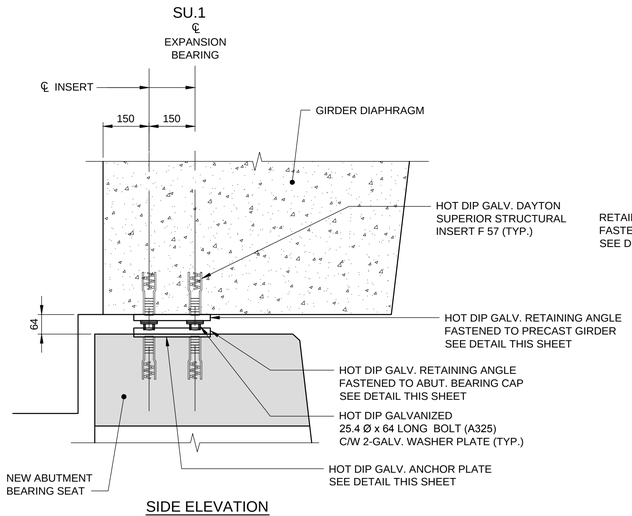


SIDE ELEVATION

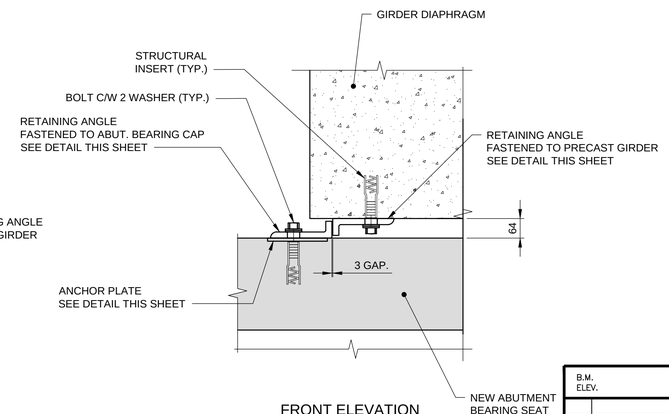


FRONT ELEVATION

## RETAINING ANGLE ASSEMBLY
1: 10

METRIC

WHOLE NUMBERS INDICATE MILLIMETRES
DECIMALIZED NUMBERS INDICATE METRES

APEGM
Certificate of Authorization
Dillon Consulting Limited (MB)
No. 1789 Date: 13/11/07

| NO. | REVISIONS | DATE | BY |
|---|---|---|---|
| 0 | ISSUED FOR TENDER | 13/11/07 | SSR |

B.M. ELEV.

DESIGNED BY CDW
DRAWN BY NBG
CHECKED BY SSR
APPROVED BY MBL
HOR. SCALE AS SHOWN
VERTICAL
DATE 13/11/07

DILLON CONSULTING

RELEASED FOR CONSTRUCTION
DATE

ENGINEER'S SEAL
PROVINCE OF MANITOBA
Nov. 7/13
C.D. WARD
Member 24456
REGISTERED PROFESSIONAL ENGINEER

CONSULTANT PROJECT NUMBER
13-7555

Winnipeg
THE CITY OF WINNIPEG
PUBLIC WORKS DEPARTMENT

RECONSTRUCTION OF THE ST. JAMES STREET BRIDGE OVER OMAND'S CREEK

BEARING LAYOUT DETAILS

CITY DRAWING NUMBER B126-13-10
SHEET 10 OF 26
CONSULTANT DRAWING NUMBER

G:\CAD\137555\09-Structural\01-Contract\137555-09-BEARING-LAYOUT-CON.dwg