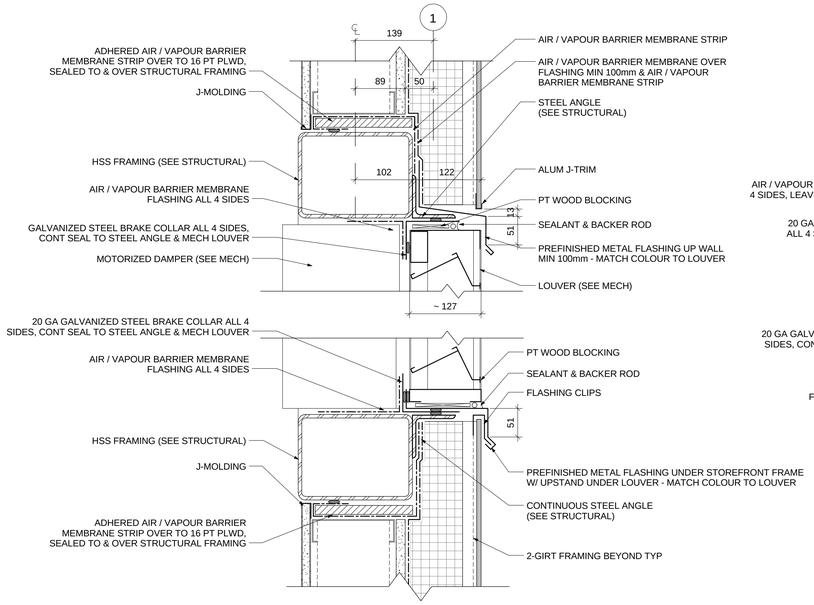

1 RELIEF AIR LOUVER PENETRATION SECTION DETAIL
1 : 5

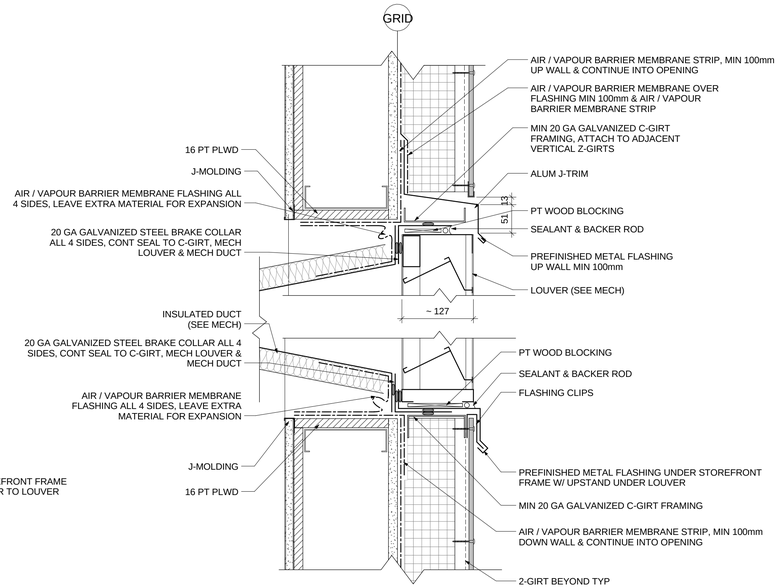

2 TYPICAL SECTION DETAIL AT LOUVER PENETRATION
1 : 5

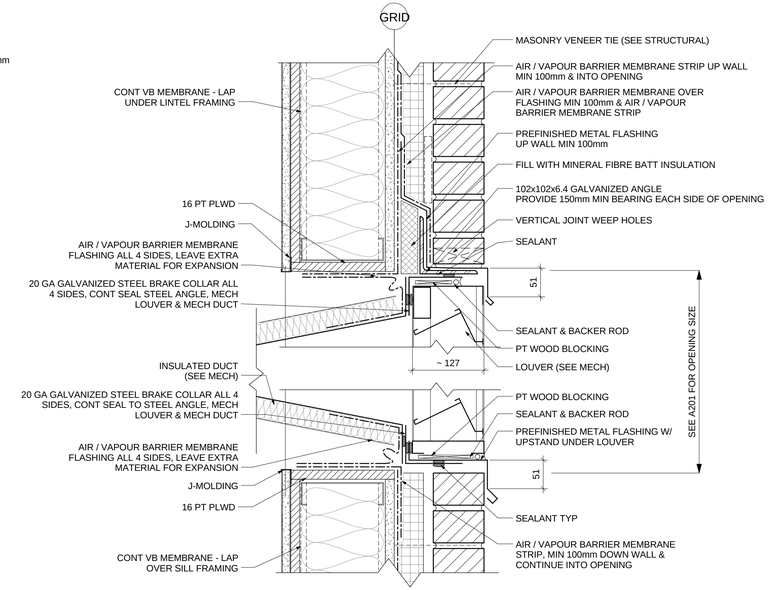

5 LOUVER PENETRATION SECTION DETAIL
1 : 5

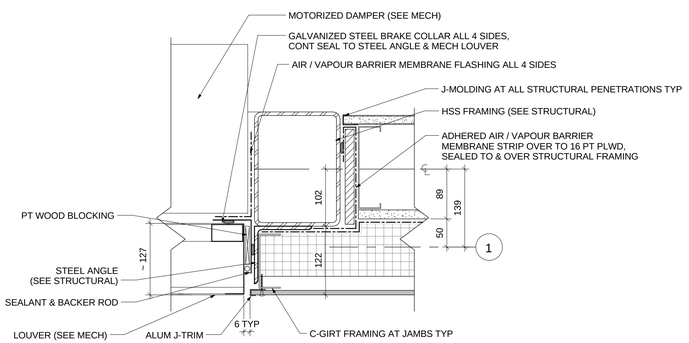

4 RELIEF AIR LOUVER PENETRATION PLAN DETAIL
1 : 5

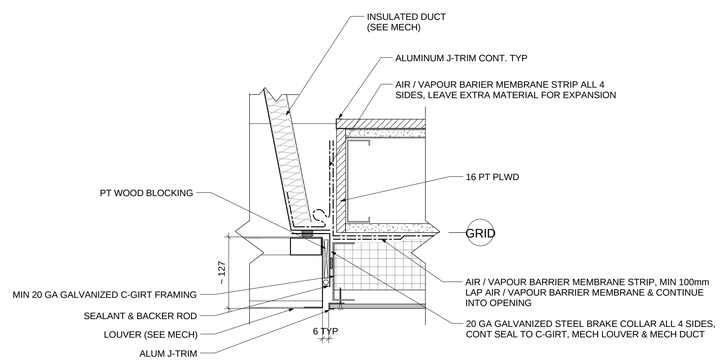

3 TYPICAL PLAN DETAIL LOUVER PENETRATION
1 : 5

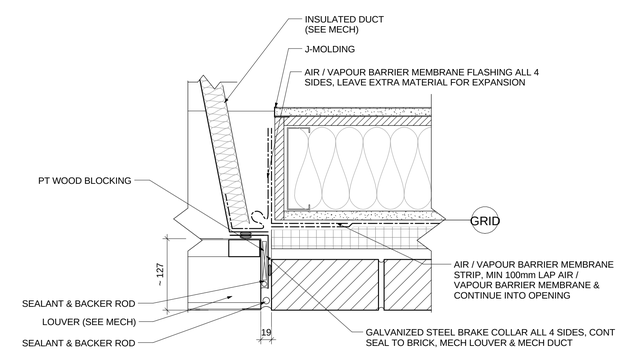

6 TYPICAL LOUVER PENETRATION PLAN DETAIL
1 : 5

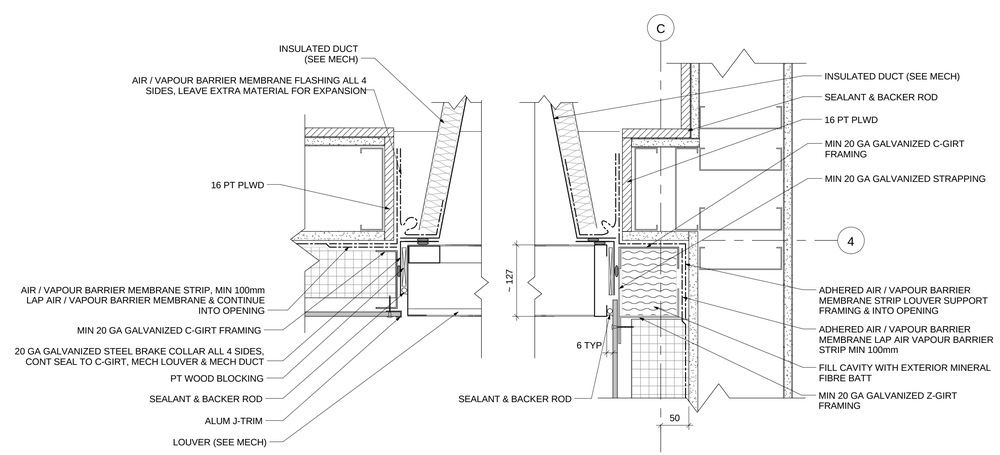

7 LOUVER PENETRATION PLAN DETAIL
1 : 5

bridgmancollaborative
ARCHITECTURE
678 MAIN STREET WINNIPEG, MB R3B 1E4
204 488 3857 tel. 204 488 0216 fax.
www.bridgmancollaborative.ca

bridgmancollaborative

Winnipeg

THE CITY OF WINNIPEG PLANNING, PROPERTY AND DEVELOPMENT DEPARTMENT
MUNICIPAL ACCOMMODATIONS DIVISION

4TH FLOOR - 185 KING STREET
R3B 1J1

Project:
EAST ELMWOOD COMMUNITY CENTRE
490 KEENLEYSIDE, WINNIPEG, MB

Project Number:	2013-041
Bid Opportunity Number	748-2013

Drawing Title:
PLAN AND SECTION DETAILS

#	Issue/Revision	Date
1	ISSUED FOR TENDER	2013-12-05

Design By:
Date:
Design Check:
Date:
Drawn By:
Date:
DWG Check:
Date:

Sheet No: A559

This drawing is property of the Consultant and cannot be reproduced or used without the consent of the Consultant. The contractor is responsible for checking and verifying all levels and dimensions and shall report all discrepancies to the Consultant and obtain clarification prior to commencing work.