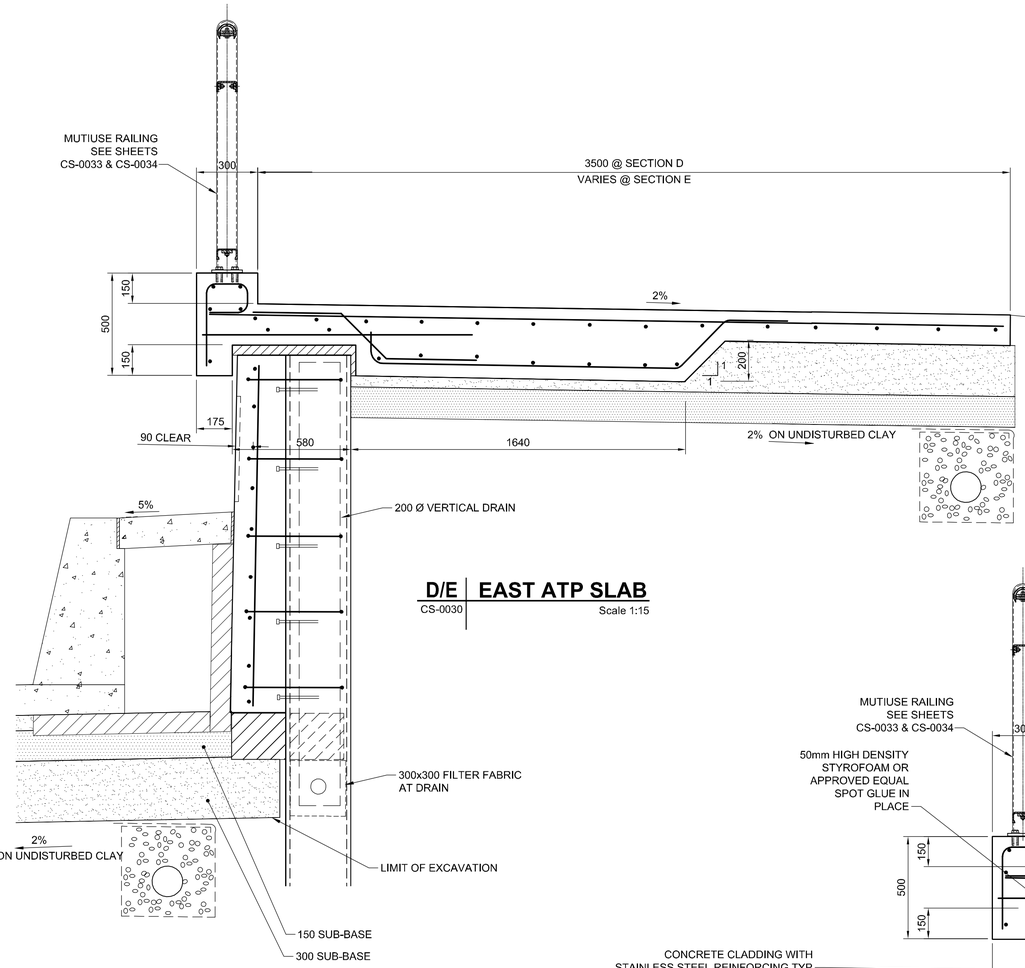

D/E | EAST ATP SLAB

CS-0030 | Scale 1:15

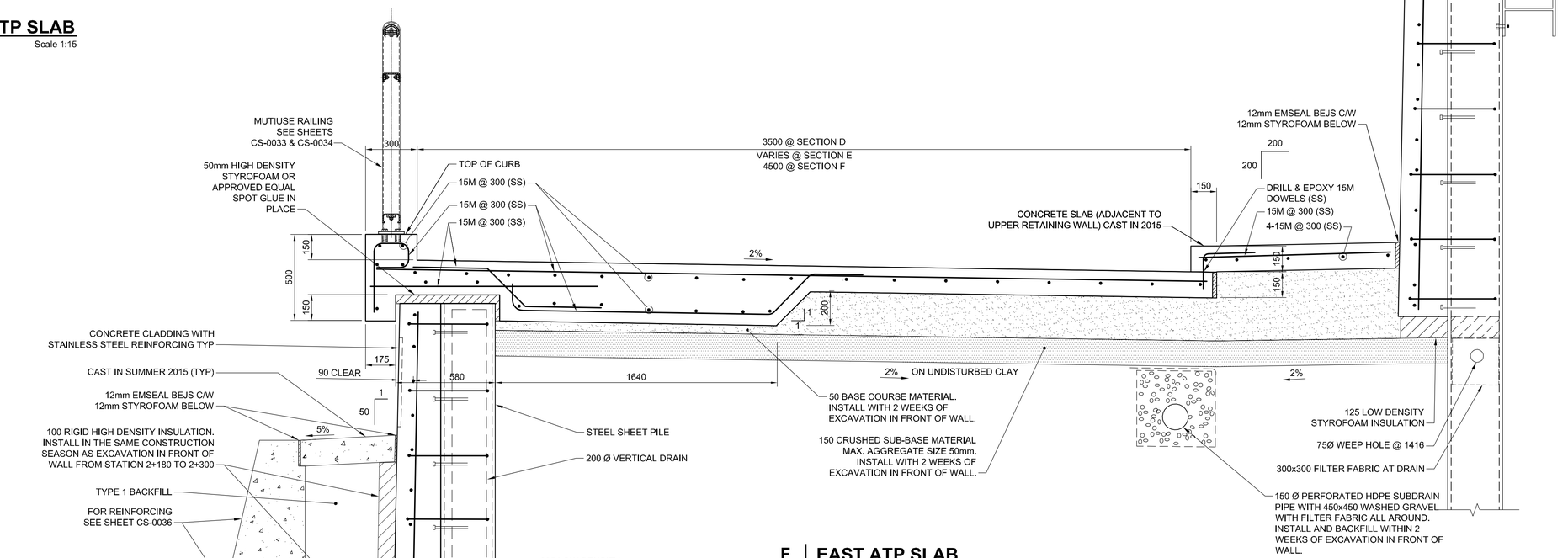

F | EAST ATP SLAB

CS-0030 | Scale 1:15

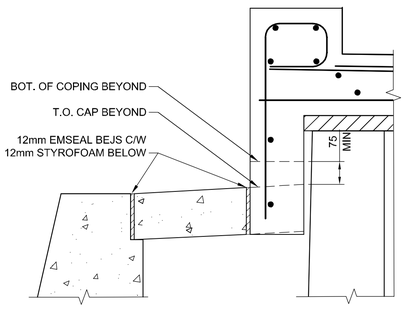

COPING - BARRIER CAP TRANSITION DETAIL

Scale 1:10

AT SE AND SW LOWER
RETAINING WALLS

BID OPPORTUNITY NO. 712-2013

APEGM
Certificate of Authorization
AECOM Canada Ltd.
No. 4671 Date: 2013/11/21

LOCATION APPROVED
UNDERGROUND STRUCTURES

SUPV. U/G STRUCTURES COMMITTEE — DATE

NOTE:
LOCATION OF UNDERGROUND STRUCTURES AS SHOWN ARE BASED ON THE BEST INFORMATION AVAILABLE. BUT NO GUARANTEE IS GIVEN THAT ALL EXISTING UTILITIES ARE SHOWN OR THAT THE GIVEN LOCATIONS ARE EXACT. CONFIRMATION OF EXISTENCE AND EXACT LOCATION OF ALL SERVICES MUST BE OBTAINED FROM THE INDIVIDUAL UTILITIES BEFORE PROCEEDING WITH CONSTRUCTION.

B.M.
ELEV.

NO.	REVISIONS	DATE	BY
0	ISSUED FOR TENDER	2013/11/21	KC

AECOM

DESIGNED BY	FT	CHECKED BY	EBL
DRAWN BY	DJH	APPROVED BY	EBL
HOR. SCALE:	AS NOTED	RELEASED FOR CONSTRUCTION BY:	
VERTICAL:	AS NOTED		
DATE	2013-06-04	DATE	

ENGINEER'S SEAL
PROVINCE OF MANITOBA
F. TABET
Member
33659
Nov. 21, 2013
REGISTERED PROFESSIONAL ENGINEER

CONSULTANT DRAWING NO.
60273041-01-CS-603

Winnipeg
THE CITY OF WINNIPEG
PUBLIC WORKS DEPARTMENT

PLESSIS ROAD TWINNING AND GRADE SEPARATION AT CN REDDITT SUBDIVISION
CONTRACT 3

CITY DRAWING NUMBER U238-2014-2032
SHEET 32 OF 37

EAST CAP AND ATP SLAB

CS-0032

A1 – 841x594
2013-11-21
_AECOMWINO_DEFAULT.CTB
P:\60273041\000–CADD\02–SHEETS\CS\60273041–01–CS–603.DWG