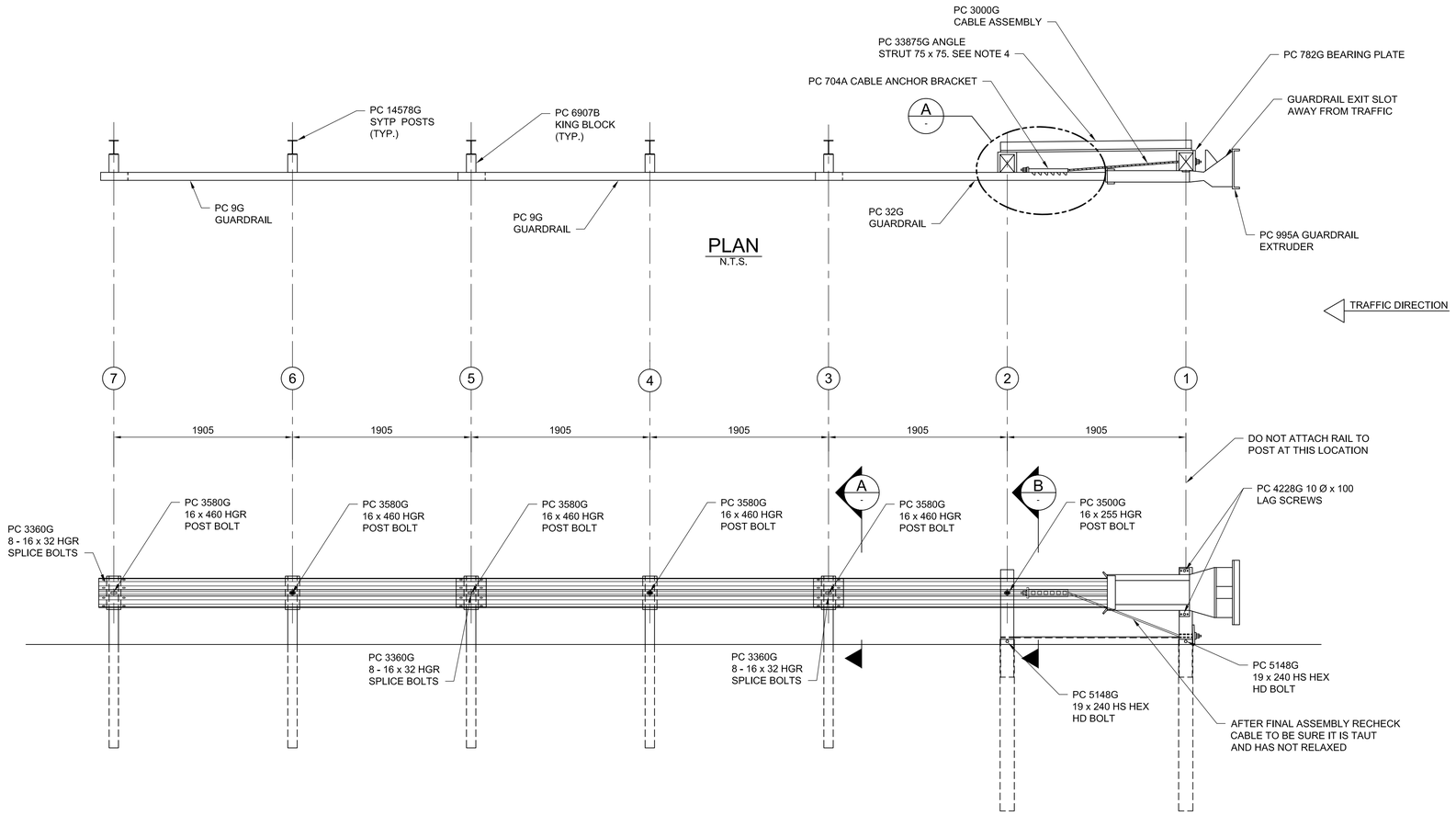


PLAN
N.T.S.

ELEVATION
N.T.S.

## BILL OF MATERIAL
FOR ET-PLUS

| PC | QTY | DESCRIPTION |
|---|---|---|
| 9G | 2 | 3/3810/1905/S (GUARDRAIL) |
| 32G | 1 | 3/3810/1905/S ANC (GUARDRAIL) |
| 704A | 1 | CABLE ANCHOR BRACKET |
| 705G | 1 | PIPE SLEEVE - 50 STD PIPE x 150 PIPE |
| 749G | 2 | 1830 TUBE SLEEVE |
| 782G | 1 | 16 x 200 x 200 BEARING PLATE |
| 995A | 1 | ET-PLUS EXTRUDER HEAD |
| 3000G | 1 | CABLE 19 x 1980 |
| 3300G | 6 | 16 WASHER |
| 3340G | 32 | 16 HEX NUT |
| 3360G | 24 | 16 x 35 HGR SPLICE BOLT |
| 3478G | 2 | 16 x 190 HEX HEAD BOLT |
| 3497G | 2 | 16 x 240 HEX HEAD BOLT |
| 3500G | 1 | 16 x 255 HGR POST BOLT |
| 3580G | 5 | 16 x 460 HGR POST BOLT |
| 3701G | 4 | 19 WASHER |
| 3704G | 2 | 19 HEX NUT |
| 3900G | 2 | 25 WASHER |
| 3910G | 2 | 25 HEX NUT |
| 4147B | 2 | 140 x 191 WOOD POST 1145 LONG |
| 4228G | 2 | 10 x 100 LAG SCREW |
| 5148G | 2 | 19 x 240 HS HEX HD BOLT |
| 6907B | 5 | 100 x 191 x 355 KING BLOCK |
| 14578G | 5 | 1830 STEEL YIELDING TERMINAL POSTS (SYTP) |
| 33875G | 1 | ANGLE STRUT |

## NOTES:

1. DO NOT ATTACH GUARDRAIL TO POST #1
2. THE 16 FLAT WASHER IS USED UNDER THE NUT BEHIND THE POST ONLY. NO WASHER IS USED AT THE RAIL.
3. MANUFACTURER SUGGESTS CUSTOMER TO PROVIDE REFLECTORIZATION OF TERMINAL.
4. ANGLE STRUT MUST BE ATTACHED USING 19 Ø HIGH STRENGTH BOLTS.

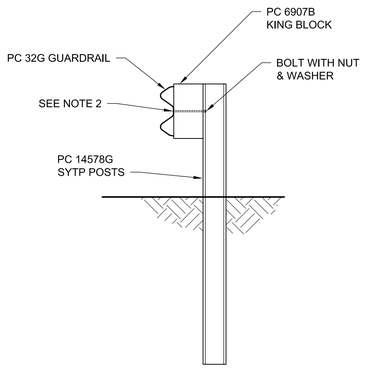


A SECTION
N.T.S.
TYPICAL @ POSTS # 3, 5 & 7

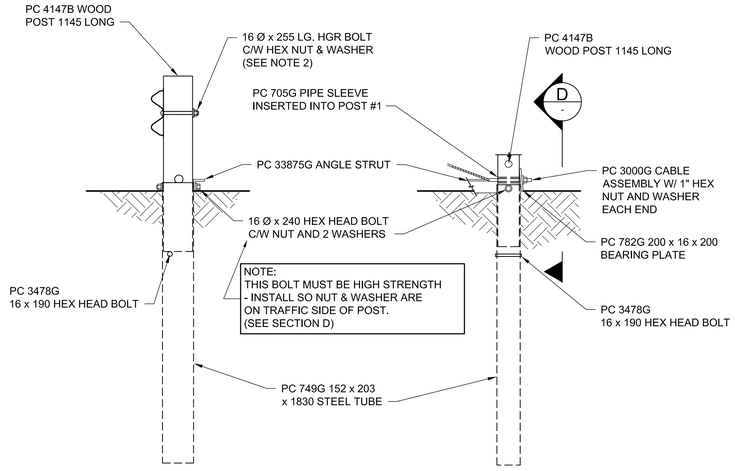


B SECTION
N.T.S.
POST # 2

PATIAL VIEW @ POST #1
N.T.S.

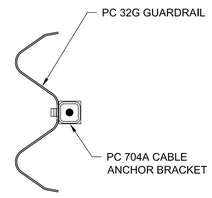


C SECTION
N.T.S.

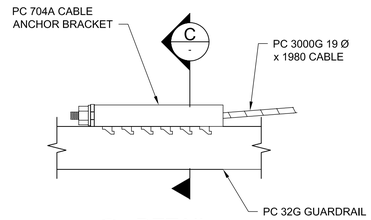


A DETAIL
N.T.S.

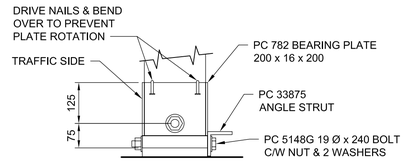


D SECTION
N.T.S.
BEARING PLATE ORIENTATION

NOTE:
THIS SHEET INTENDED FOR CLARITY ONLY. "ET PLUS" GUARDRAIL SYSTEMS ARE SUPPLIED AS COMPLETE UNITS INCLUDING ALL HARDWARE. CONTRACTOR SHALL FOLLOW MANUFACTURE'S INSTALLATION PROCEDURES.

APEGM
Certificate of Authorization
Dillon Consulting Limited (MB)
No. 1789 Date: 2013/08/01

UNDERGROUND STRUCTURES
SUPV. U/G STRUCTURES COMMITTEE — DATE

NOTE:
LOCATION OF UNDERGROUND STRUCTURES AS SHOWN ARE BASED ON THE BEST INFORMATION AVAILABLE, BUT NO GUARANTEE IS GIVEN THAT ALL EXISTING UTILITIES ARE SHOWN OR THAT THE GIVEN LOCATIONS ARE EXACT. CONFIRMATION OF EXISTENCE AND EXACT LOCATION OF ALL SERVICES MUST BE OBTAINED FROM THE INDIVIDUAL UTILITIES BEFORE PROCEEDING WITH CONSTRUCTION.

B.M.
ELEV.

| NO. | REVISIONS | DATE | BY |
|---|---|---|---|
| 0 | ISSUED FOR TENDER | 13/08/08 | MBL |

DESIGNED BY
DRAWN BY MRD
CHECKED BY
APPROVED BY
HOR. SCALE AS SHOWN
VERTICAL
DATE 2013/08/01

DILLON CONSULTING
RELEASED FOR CONSTRUCTION
DATE

ENGINEER'S SEAL
ENGINEER'S SEAL N/A

CONSULTANT PROJECT NUMBER
12-6606

Winnipeg
THE CITY OF WINNIPEG
PUBLIC WORKS DEPARTMENT

WAVERLEY WEST ARTERIAL ROADS PROJECT
(WWARP) PART 3 - CONTRACT 2
ROUTE 90 TO ROUTE 165, OVERPASS (KENASTON BLVD.)
AND ASSOCIATED WORKS

ET-PLUS DETAILS

CITY DRAWING NUMBER B242-13-55
SHEET 55 OF 128
CONSULTANT DRAWING NUMBER

G:\CAD\126606\contract\contract_2\Current\Struct_Approach Guardrail Details 2 of 5.dwg