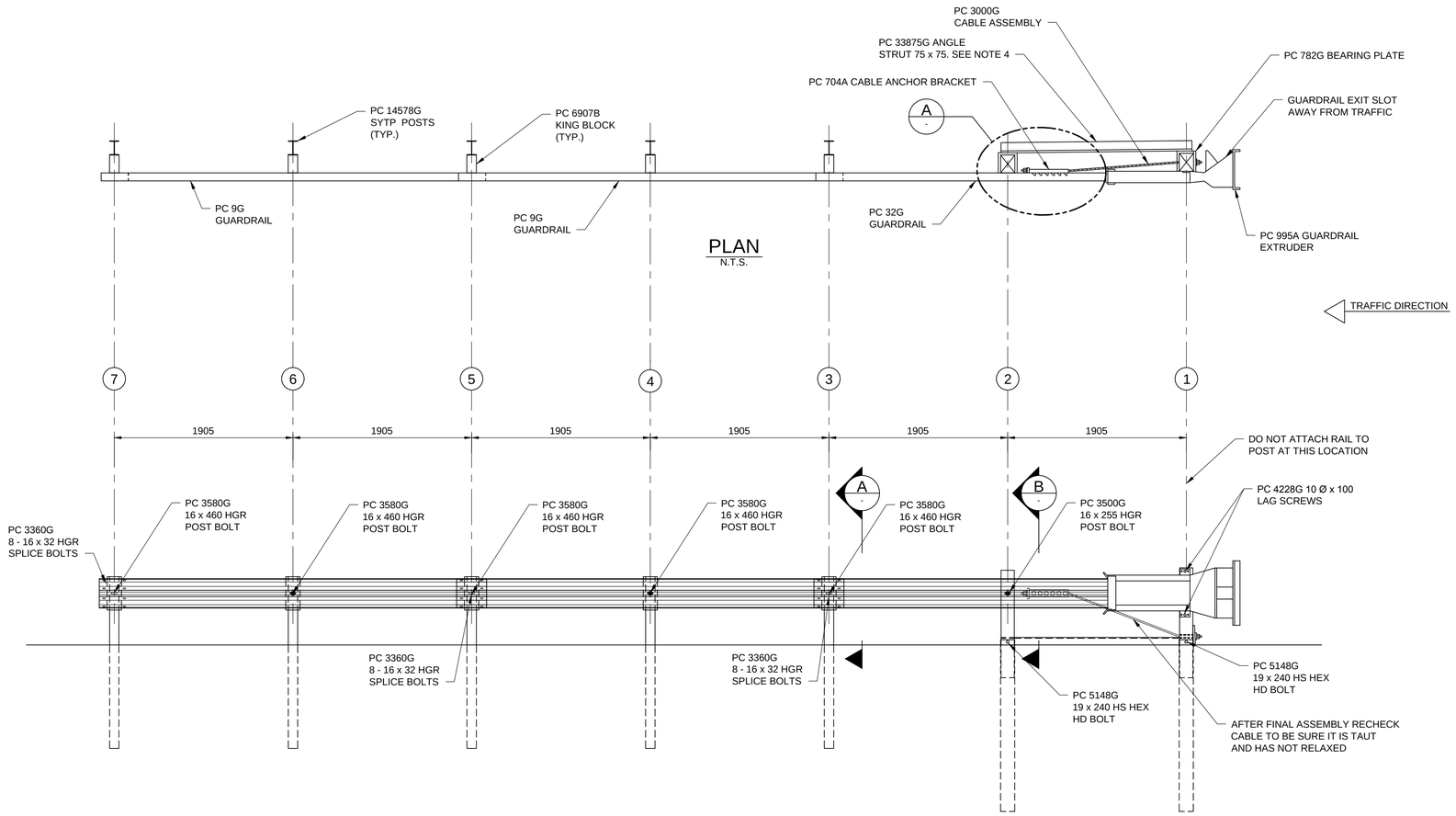

PLAN
N.T.S.

ELEVATION
N.T.S.

BILL OF MATERIAL
FOR ET-PLUS

PC	QTY	DESCRIPTION
9G	2	3/3810/1905/S (GUARDRAIL)
32G	1	3/3810/1905/S ANC (GUARDRAIL)
704A	1	CABLE ANCHOR BRACKET
705G	1	PIPE SLEEVE - 50 STD PIPE x 150 PIPE
749G	2	1830 TUBE SLEEVE
782G	1	16 x 200 x 200 BEARING PLATE
995A	1	ET-PLUS EXTRUDER HEAD
3000G	1	CABLE 19 x 1980
3300G	6	16 WASHER
3340G	32	16 HEX NUT
3360G	24	16 x 35 HGR SPLICE BOLT
3478G	2	16 x 190 HEX HEAD BOLT
3497G	2	16 x 240 HEX HEAD BOLT
3500G	1	16 x 255 HGR POST BOLT
3580G	5	16 x 460 HGR POST BOLT
3701G	4	19 WASHER
3704G	2	19 HEX NUT
3900G	2	25 WASHER
3910G	2	25 HEX NUT
4147B	2	140 x 191 WOOD POST 1145 LONG
4228G	2	10 x 100 LAG SCREW
5148G	2	19 x 240 HS HEX HD BOLT
6907B	5	100 x 191 x 355 KING BLOCK
14578G	5	1830 STEEL YIELDING TERMINAL POSTS (SYTP)
33875G	1	ANGLE STRUT

NOTES:

1. DO NOT ATTACH GUARDRAIL TO POST #1
2. THE 16 FLAT WASHER IS USED UNDER THE NUT BEHIND THE POST ONLY. NO WASHER IS USED AT THE RAIL.
3. MANUFACTURER SUGGESTS CUSTOMER TO PROVIDE REFLECTORIZATION OF TERMINAL.
4. ANGLE STRUT MUST BE ATTACHED USING 19 Ø HIGH STRENGTH BOLTS.

APEGM
Certificate of Authorization
Dillon Consulting Limited (MB)
No. 1789 **Date:** 2013/08/08

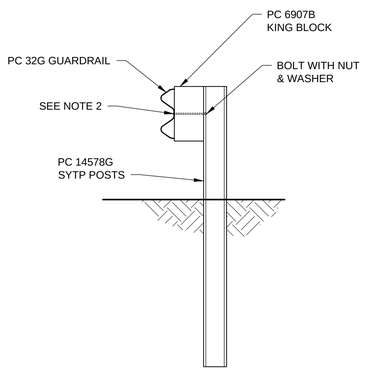

A SECTION
N.T.S.
TYPICAL @ POSTS # 3, 5 & 7

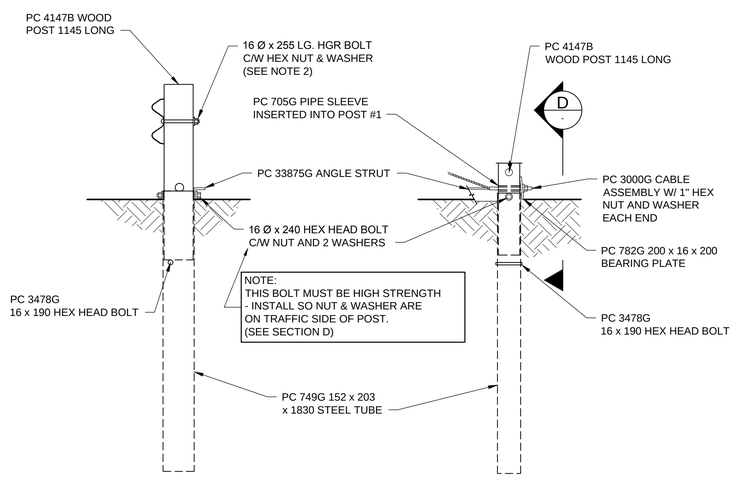

B SECTION
N.T.S.
POST # 2

PATIAL VIEW @ POST #1
N.T.S.

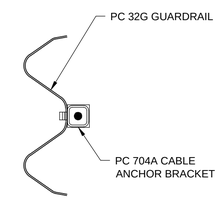

C SECTION
N.T.S.

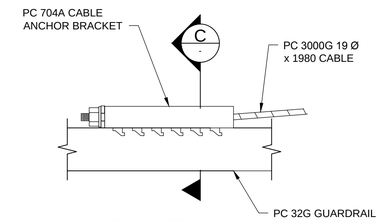

A DETAIL
N.T.S.

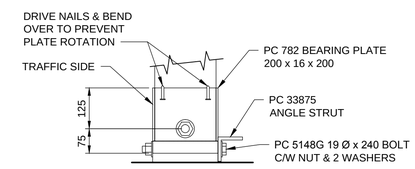

D SECTION
N.T.S.
BEARING PLATE ORIENTATION

NOTE:
THIS SHEET INTENDED FOR CLARITY ONLY. "ET PLUS" GUARDRAIL SYSTEMS ARE SUPPLIED AS COMPLETE UNITS INCLUDING ALL HARDWARE. CONTRACTOR SHALL FOLLOW MANUFACTURE'S INSTALLATION PROCEDURES.

METRIC
WHOLE NUMBERS INDICATE MILLIMETRES
DECIMALIZED NUMBERS INDICATE METRES

WARNING
IF POWER EQUIPMENT OR EXPLOSIVES ARE TO BE USED FOR EXCAVATION ON THIS PROJECT THE CONTRACTOR MUST:

1. NOTIFY THE GAS COMPANY OF THE PROPOSED LOCATION OF EXCAVATION.
2. TAKE PRECAUTION TO AVOID DAMAGE TO GAS COMPANY INSTALLATIONS SEE PROVINCIAL REGULATION 210/72 FOR DETAILS.
3. OBTAIN EXCAVATION PERMITS PRIOR TO CONSTRUCTION.
4. A MINIMUM VERTICAL SEPARATION OF 300 mm FROM GAS MAINS AND 100 mm FROM GAS SERVICE MUST BE MAINTAINED BETWEEN ANY MANITOBA HYDRO FACILITY AND ANY NEW INSTALLATIONS.
5. A MINIMUM 900 mm OF COVER SHALL BE MAINTAINED IN ALL AREAS WHERE EQUIPMENT WILL BE CROSSING, TRAVELING OR COMPACTING OVER THE HIGH PRESSURE GAS MAINS.
6. IF EQUIPMENT MUST CROSS, TRAVEL, OR COMPACT OVER THE GAS MAIN WITH LESS THAN THE MINIMUM DEPTH COVER, EARTH BRIDGING OR STEEL PLATES SHALL BE PLACED OVER THE MAIN AND EXTEND A MINIMUM OF 1.0 METRE ON EITHER SIDE AT EACH CROSSING LOCATION.

150 WM	WATERMAIN	150 WM	MTS	M.T.S.	MTS	150 mm W.M.	WATERMAIN	150 mm W.M.
	HYDRANT			CONCRETE			HYDRANT	
	VALVE			ASPHALT			VALVE	
300 LDS	LAND DRAINAGE SEWER	300 LDS		PLANING		300 mm L.D.S.	LAND DRAINAGE SEWER	300 mm L.D.S.
250 WWS	WASTE WATER SEWER	250 WWS		SIDEWALK		250 mm W.W.S.	WASTE WATER SEWER	250 mm W.W.S.
	MANHOLE			PAVING STONES			℄ PROFILE	
	CATCH BASIN			PROPERTY LINE			NORTH/WEST GUTTER	
	TEST HOLES			SURVEY BAR			SOUTH/EAST GUTTER	
	JUNCTIONS			CURB RAMP			NORTH/WEST T/LANE	
	CULVERT			DITCH			SOUTH/EAST T/LANE	
100 GAS	GAS	100 GAS		SWALE				
EXISTING	LEGEND–PLAN	PROPOSED	EXISTING	LEGEND–PLAN	PROPOSED	EXISTING	LEGEND–PROFILE	PROPOSED

UNDERGROUND STRUCTURES

SUPV. U/G STRUCTURES COMMITTEE — DATE

NOTE:
LOCATION OF UNDERGROUND STRUCTURES AS SHOWN ARE BASED ON THE BEST INFORMATION AVAILABLE, BUT NO GUARANTEE IS GIVEN THAT ALL EXISTING UTILITIES ARE SHOWN OR THAT THE GIVEN LOCATIONS ARE EXACT. CONFIRMATION OF EXISTENCE AND EXACT LOCATION OF ALL SERVICES MUST BE OBTAINED FROM THE INDIVIDUAL UTILITIES BEFORE PROCEEDING WITH CONSTRUCTION.

B.M. 654008 N: 5515764.610 E: 633359.697 ELEV. 232.463 m
654210 N: 5514436.957 E: 630550.534 ELEV. ---

NO.	REVISIONS	DATE	BY
0	ISSUED FOR TENDER	13/08/08	MRD

DESIGNED BY
DRAWN BY MRD
CHECKED BY
APPROVED BY
HOR. SCALE
VERTICAL
DATE

DESIGN TEAM
DILLON CONSULTING
RELEASED FOR CONSTRUCTION
DATE

ENGINEER'S SEAL
N/A
CONSULTANT PROJECT NUMBER
12-6606

Winnipeg
THE CITY OF WINNIPEG
PUBLIC WORKS DEPARTMENT

WAVERLEY WEST ARTERIAL ROADS PROJECT
(WWARP) PART 3 - CONTRACT 2
ROUTE 90 TO ROUTE 165 OVERPASS (KENASTON BLVD.)
AND ASSOCIATED WORKS

S772 - ET-PLUS FOR GUARDRAIL

CITY DRAWING NUMBER B242-13-119
SHEET 119 OF 128
CONSULTANT DRAWING NUMBER S772-2013-05

G:\CAD\126606\Contract\Contract_2\Current\Struct_Approach Guardrail Details 2 of 5.dwg