D SIZE 22" x 34" (559mm x 864mm)

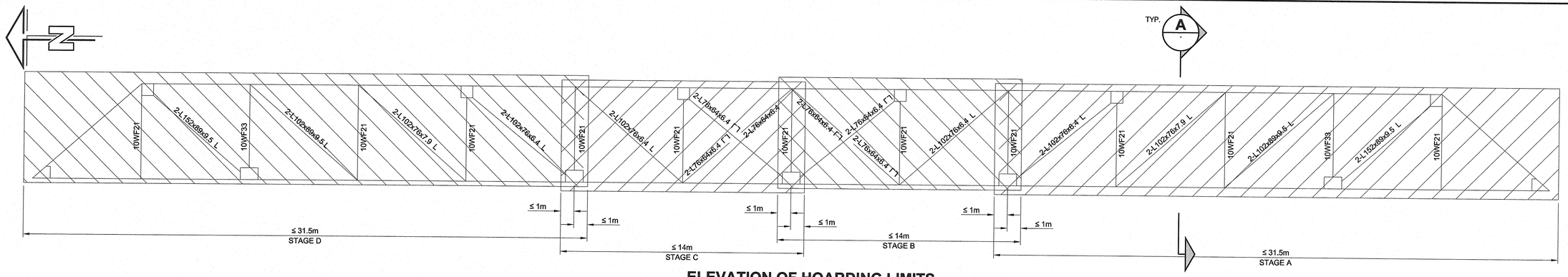

ELEVATION OF HOARDING LIMITS

0 1200 2400 3600 mm SCALE 1:120

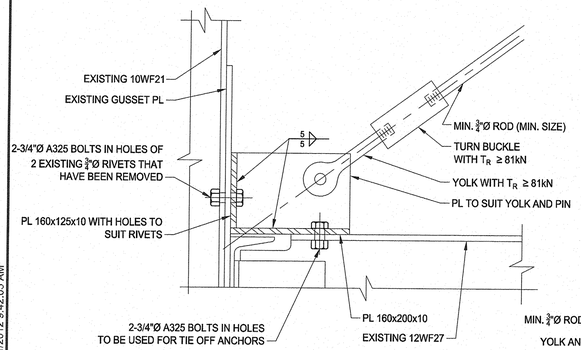

TEMPORARY BRACING DETAIL 5 D-12234

0 50 100 150 mm SCALE 1:5

NOTE:
AFTER HOARDING HAS BEEN REMOVED; REMOVE TEMPORARY BRACING, ANCHOR PLATES AND BOLTS.
PUT NEW GALVANIZED 3/4"Ø A325 BOLTS IN BOLT HOLES AND TOUCH UP METALIZING

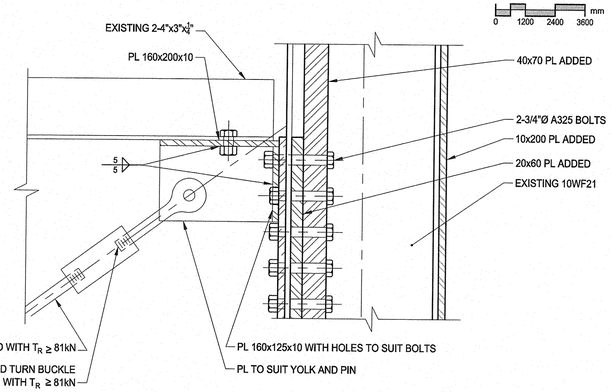

TEMPORARY BRACING DETAIL 6 D-12234

0 50 100 150 mm SCALE 1:5

NOTE:
AFTER HOARDING HAS BEEN REMOVED; REMOVE TEMPORARY BRACING, ANCHOR PLATES AND BOLTS.
PUT NEW GALVANIZED 3/4"Ø A325 BOLTS IN BOLT HOLES AND TOUCH UP METALIZING

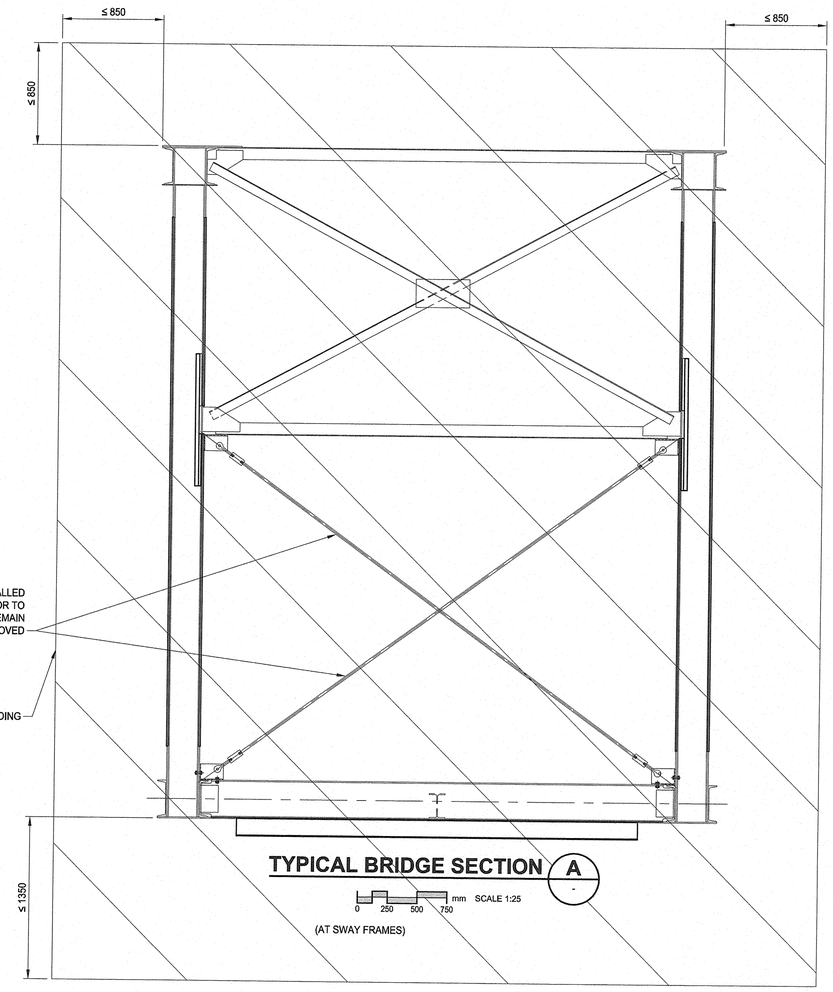

TYPICAL BRIDGE SECTION A -

0 250 500 750 mm SCALE 1:25

(AT SWAY FRAMES)

SIM E D-12235

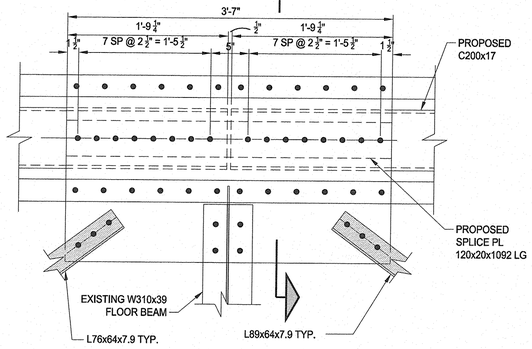

DETAIL 12 D-12233

0 100 200 300 mm SCALE 1:10

SIM E D-12235

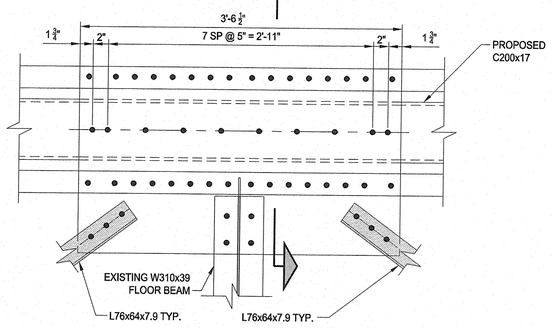

DETAIL 13 D-12233

0 100 200 300 mm SCALE 1:10

APEGM Certificate of Authorization AECOM Canada Ltd. No. 4671 Date: 01 Nov 2012

BID OPPORTUNITY NO. 830-2012

LOCATION APPROVED
UNDERGROUND STRUCTURES

SUPR. U/G STRUCTURES COMMITTEE DATE

NOTE:
LOCATION OF UNDERGROUND STRUCTURES AS SHOWN ARE BASED ON THE BEST INFORMATION AVAILABLE. BUT NO GUARANTEE IS GIVEN THAT ALL EXISTING UTILITIES ARE SHOWN OR THAT THE GIVEN LOCATIONS ARE EXACT. CONFIRMATION OF EXISTENCE AND EXACT LOCATION OF ALL SERVICES MUST BE OBTAINED FROM THE INDIVIDUAL UTILITIES BEFORE PROCEEDING WITH CONSTRUCTION.

NO.	REVISIONS	YY/MM/DD	BY
0	ISSUED FOR CONSTRUCTION	12/10/31	KC

AECOM

DESIGNED BY	FT/ARB	CHECKED BY	SBB/KC
DRAWN BY	KC	APPROVED BY	EBL
HOR. SCALE	AS NOTED	RELEASED FOR CONSTRUCTION	
VERT. SCALE	AS NOTED		
DATE		DATE	

PROFESSIONAL'S SEAL
PROVINCE OF MANITOBA S.B. BISWANGER 2012/01/31 REGISTERED PROFESSIONAL ENGINEER

CONSULTANT DRAWING NO. D265-230-02_01-S-4007_RX.dwg

Winnipeg

THE CITY OF WINNIPEG
WATER AND WASTE DEPARTMENT

REHABILITATION / REPLACEMENT OF THE MIDTOWN FEEDERMAIN AT THE AT ASSINIBOINE RIVER

STRUCTURAL

HOARDING LIMITATIONS

SHEET 12 OF 19

CITY DRAWING NUMBER D-13054 REV 0

PLOT: 10/31/2012 9:42:05 AM
AECOM FILE NAME: D265-230-02_01-S-4007_RX.dwg Saved By: cameronkj
AECOM REVIEW | DRFT CHK | KC